HEWLETT PACKARD
Expanding Possibilities

English

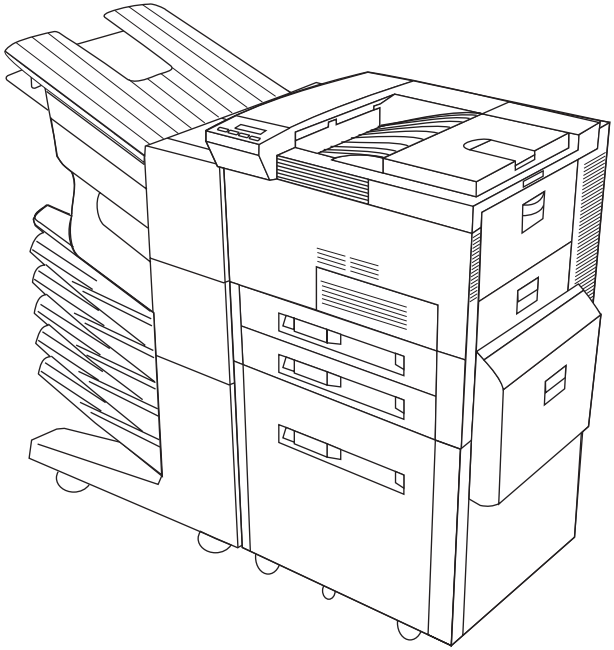

HP LaserJet 8100, 8100 N, 8100 DN and Paper Handling Devices Service Manual

HEWLETT PACKARD
Expanding Possibilities

HP LaserJet 8100, 8100 N, 8100 DN
and Paper Handling Devices
Service Manual

Download Service Manual And Resetter Printer at http://printer1.blogspot.com

Download Service Manual And Resetter Printer at http://printer1.blogspot.com

Service Manual

HP LaserJet 8100 (C4214A)
HP LaserJet 8100 N (C4215A)
HP LaserJet 8100 DN (C4216A)
Paper Handling Devices

Download Service Manual And Resetter Printer at http://printer1.blogspot.com

© Copyright
Hewlett-Packard Company 1998

All Rights Reserved. Reproduction, adaptation, or translation without prior written permission is prohibited, except as allowed under the copyright laws.

Publication number
C4214-91000

First edition, October 1998

Trademark Credits

Adobe and PostScript are trademarks of Adobe Systems Incorporated which may be registered in certain jurisdictions.

Windows is a U.S. registered trademark of Microsoft Corporation.

Warranty

The information contained in this document is subject to change without notice.

Hewlett-Packard makes no warranty of any kind with regard to this material, including, but not limited to, the implied warranties or merchantability and fitness for a particular purpose.

Hewlett-Packard shall not be liable for errors contained herein or for incidental or consequential damages in connection with the furnishing, performance, or use of this material.

WARNING

Electrical Shock Hazard

To avoid electrical shock, use only supplied power cords and connect only to properly grounded wall outlets.

Hewlett-Packard Company
11311 Chinden Boulevard
Boise, Idaho 83714 U.S.A.

Download Service Manual And Resetter Printer at http://printer1.blogspot.com

Conventions

This manual uses the following conventions:

The names of major printer parts and assemblies are Capitalized.

Color is used to emphasize items which are important to the material under discussion.

Bold is used for emphasis, particularly in situations where *italic* type would be confusing.

Italic type is used to indicate related documents or emphasis.

Note Notes contain important information set off from the text.

CAUTION Caution messages alert you to the possibility of damage to equipment or loss of data.

WARNING! Warning messages alert you to the possibility of personal injury.

The illustration below shows the orientation of the paper-handling accessories as they are referred to in this publication.

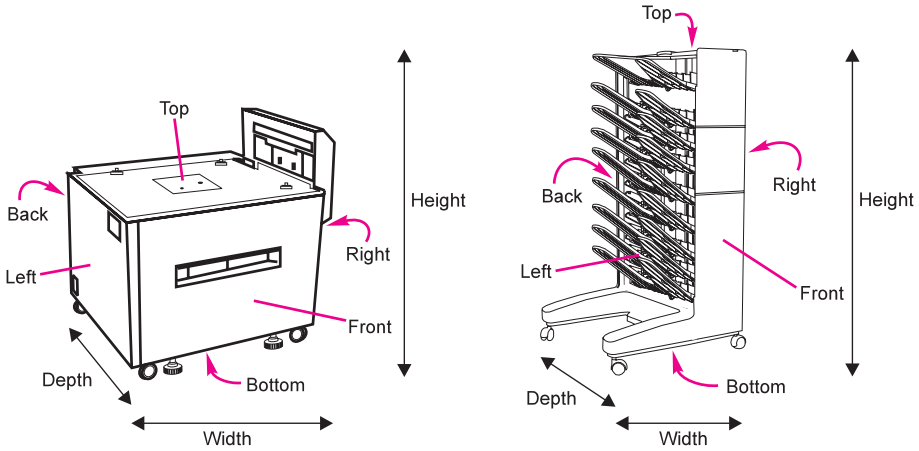

Download Service Manual And Resetter Printer at http://printer1.blogspot.com

Chapter Descriptions

1 Product Information

Contains printer features and product overview, tray capacities and sizes, media specifications, service approach, how to get technical assistance, and required safety and compliance statements.

2 Site Requirements

Contains space and environmental requirements.

3 Operating Overview

Contains details about control panel menus, restoring factory defaults, and resetting and testing the printer.

4 Maintenance and Adjustments

Contains cleaning and preventive maintenance information, and adjustment procedures for all paper trays.

5 Functional Overview

Contains block diagrams and basic theory of operation for the printer systems, paper paths, and paper handling devices. Contains basic cabling information.

6 Removal and Replacement

Contains step-by-step procedures for replacing field replaceable units (FRUs) in the printer and paper-handling devices.

7 Troubleshooting

Contains a preliminary troubleshooting table, a table with descriptions and recommended actions for all control panel messages, image defect samples, paper handling problems, and troubleshooting checks and tools.

Download Service Manual And Resetter Printer at http://printer1.blogspot.com

8 Parts and Diagrams

Contains exploded view drawings and part number listings for all replaceable parts in the printer and paper-handling devices.

Contains two replaceable parts tables: one sorted alphabetically by part name, and one sorted numerically by part number. Both tables are cross referenced to the diagrams in the chapter.

Subject Index

Contains an alphabetical, cross referenced listing of information found in the main body of the manual.

Download Service Manual And Resetter Printer at http://printer1.blogspot.com

Download Service Manual And Resetter Printer at http://printer1.blogspot.com

Table of Contents

1 Product Information

Printer Features 2
Paper Capacities and Sizes 4
Identification 6
Model and Serial Numbers 6
Specifications 7
Media Selection Guidelines 11
Paper 11
Envelopes 11
Adhesive Labels 12
Transparencies 13
Storing Print Media 13
Shipping Print Media 13
Product Overview 14
External View of HP LaserJet 8100/N/DN Engine 14
Formatter Assemblies 16
Paper-handling Devices, Accessories, and Options 17
Ordering Information 18
Hard Disk 24
Determining Memory Requirements 24
Service Approach 26
Ordering Parts 26
Exchange Program 27
Consumables 27
Toner Cartridge Life 27
Refilled Toner Cartridges and Non-HP Staple Cartridges . . . 28
Recycling Toner Cartridges 28
Technical Assistance 29
HP FIRST (Fax Information Retrieval Support Technology) . . 29
Internet 30
World Wide Web 30
HP Reseller Sales and Service Support Line (US Only) 30
Other Areas 30
Warranty 31
Regulatory Information 33
FCC Regulations 33
Environmental Product Stewardship 34
Material Safety Data Sheet 36
Environmental Conformity 37
Safety Statements 39

Download Service Manual And Resetter Printer at http://printer1.blogspot.com

2 Site Requirements

Operating Environment 44
Space Requirements. 45
Environmental Requirements 47

3 Operating Overview

Using the Control Panel 50
Control Panel Layout 50
Indicator Lights 51
Settings and Defaults 52
Printer Driver Information 52
Paper Source Default 53
Performing a Cold Reset. 54
Setting the Display Language. 54
Control Panel Menus. 57
Quick Copy Jobs Menu. 58
Private/Stored Jobs Menu. 58
Information Menu 59
Paper Handling Menu 60
Print Quality Menu 62
Printing Menu 64
Configuration Menu. 67
I/O Menu 72
EIO Menu 74
Resets Menu. 76
Service Mode 77
Setting Page Count, Maintenance Count,
and Serial Number 79
Setting the Cold Reset Default Paper Size. 80
Testing the Printer. 81
Paper Path Test 81
Configuration Page 81

4 Maintenance and Adjustments

Cleaning the Printer and Accessories 86
Cleaning the Printer 87
Cleaning Spilled Toner 88
Preventive Maintenance 89
Tray Adjustment Procedure. 90
2000-sheet Input Tray Adjustment Procedure. 92

Download Service Manual And Resetter Printer at http://printer1.blogspot.com

5 Functional Overview

Printer Functional Block Diagram 96
Power Distribution System 97
AC Power Distribution. 98
Overcurrent/Overvoltage Protection 98
High Voltage Power Distribution 99
Formatter System 100
DC Controller System 103
Laser and Scanner Drive 103
Paper Motion Monitoring and Control 103
Clutches 103
Engine Test Microswitch 104
Motors 104
Image Formation System 105
Toner Cartridge. 106
Drum Cleaning 108
Drum Conditioning 109
Image Writing 110
Image Developing 112
Image Transferring and Media Separation 114
Image Fusing 115
Paper Paths and Components 116
Printer, Duplexer, and Envelope Feeder. 116
Paper Size Switches (Trays 2 and 3) 119
Printing from Tray 1 119
Printing from Trays 2 and 3. 119
Printing from the Envelope Feeder 120
Printing with the Duplexer 120
2000-sheet Input Tray (Tray 4) Components 121
2000-Sheet Input Tray Operation 123
2 x 500-sheet Input Tray 126
2 x 500-sheet Input Tray Operation 128
7-bin Tabletop Mailbox Components 130
7-bin Tabletop Mailbox Operation. 132
8-bin Mailbox Components 136
8-bin Mailbox Operation 139
Finisher Components 141
Stapler Unit Operation 143
Main Functional Cycles of the Stapler (Internal Paper Path) 145
Communication Link (Daisy Chain). 146
Paper Jam Detection. 148
Printer Timing 148
IEEE 1284 Parallel Cable Information. 150

Download Service Manual And Resetter Printer at http://printer1.blogspot.com

6 Removal and Replacement

Removal and Replacement Strategy 152
Required Tools 153
User Installable Accessories 154
Memory and Personality Upgrade 154
Duplexer 156
Envelope Feeder 156
2000-sheet or 2 x 500-sheet Input Tray 157
8-bin Mailbox/5-bin Mailbox with Stapler 158
7-bin Tabletop Mailbox 159
Hardware Table 162
Engine Removal and Replacement 164
Control Panel 165
Covers 167
Delivery Unit (for Face-down Bin) 176
Diverter Assembly 179
Diverter Door Assembly 180
Lower Right Door Assembly 181
Fan 1, Laser/Scanner and Housing (Exhaust) 184
Fan 2, Low Voltage Power Supply (Exhaust) 186
Fan 3, Formatter Fan and Housing (Intake) 187
Fan 4, Delivery Unit (Exhaust) 188
Fan 5, Tray 1 (Intake) 189
Tray 1 191
Tray 1 Pickup Assembly 194
Feeder Assembly 198
Formatter Assembly 200
Fusing Assembly 202
Laser/Scanner Assembly 204
Main Gear Assembly 206
Main Motor Assembly 209
Paper Input Unit (PIU) 210
PCA, DC Controller 211
Output Paper Sensor PCA 212
High Voltage Power Supply (HVPS) 219
Low Voltage Power Supply (LVPS) 220
Registration Assembly 221
Tray 1 Feed Roller and Separation Pad 224
Tray 2 and 3 Pickup, Feed, and Separation Rollers 226
Paper Input Unit Sensor (PS2) 227
Registration Sensor (PS1) 229
Face-up Solenoid Assembly (SL3) 231
Transfer Roller Assembly 232
Tray 2 and 3 Assemblies 234
2000-sheet Input Tray Removal and Replacement 235
Orientation 236

Download Service Manual And Resetter Printer at http://printer1.blogspot.com

Front Cover 237
Back Cover 238
Left Cover 239
Right Cover 240
Main Drive Assembly 241
Paper Tray 243
Main Cable Harness 244
Controller PCA 246
Front LED PCA Assembly. 248
Pickup Assembly. 250
Power Supply 252
Pickup, Feed, and Separation Rollers 254
Paper Quantity Switch Assembly 257
Paper Size Switch Assembly 257
Vertical Transfer Unit (VTU) 259
Tension Springs 261
Locating Pins 262
Casters and Stabilizing Feet. 263
Adjustable Foot. 264
2 x 500-sheet Input Tray Removal and Replacement. 265
Orientation of the 2 x 500-sheet Input Tray 266
Back Cover 267
Left Cover 268
Vertical Transfer Unit (VTU) 269
Right Cover. 272
Front Top Cover 275
Trays 4 and 5 278
Pickup Assembly. 280
Paper Deck Drive Assembly 282
Pickup, Feed, and Separation Rollers 284
Controller PCA 285
Tray-Size Sensing PCA 286
Power Supply 288
Main Cable 289
Storage Paper Tray. 291
Front Door (Storage Area) 292
Casters 293
Foot Tip and Adjustable Foot Tip (Stabilizing Feet) 294
Locating Pins 295
Front LED PCA. 296
7-bin Tabletop Mailbox Removal and Replacement 297
Orientation of the 7-bin Tabletop Mailbox. 298
Front Cover. 299
Back Cover 302
Top Cover. 304
Controller PCA 308
Power Supply 309

Download Service Manual And Resetter Printer at http://printer1.blogspot.com

Right Door Assembly (Paper Path Cover) 310
Face-down Bins 314
Empty Bin Sensor PCA. 317
Full Bin and Interlock Sensor PCA 319
LED PCA. 321
Face-up Sensors PCA 322
Reversing Mechanism Motor 323
Face-up/Diverter Assembly (Flipper) 325
Short Tray 7 328
Solenoid Reversing Mechanism 329
Flipper Solenoid 330
Handle. 331
Latching Mechanism. 332
Cover Latch. 333
8-bin Mailbox Removal and Replacement. 334
Orientation 335
Front and Back Covers 336
Top Cover 337
Power Supply 338
Paper Bins and Blind Cover 339
Flipper Assembly 340
Delivery Head Motor 343
Transport Belt Motor 344
Input Paper Guide. 346
Metal Tape and Housing Assembly 348
Controller PCA 350
Anticurl Strings 352
Delivery Head Assembly. 354
Interlock Switch. 359
Diagnostic LED PCA. 360
User Status LED PCA. 362
Adjustable and Fixed Casters. 364
Attachment Assembly 365
Stapler Assembly Removal and Replacement 366
Mailbox with Stapler, Stapler Removal or Installation. 367
Back Plate. 369
Stapler Controller PCA 371
Top Cover Assembly. 374
Stapler Bed Assembly. 375
Hinges. 377

Download Service Manual And Resetter Printer at http://printer1.blogspot.com

7 Troubleshooting

Troubleshooting Process 380
Troubleshooting the Printing System 384
Preliminary Operating Checks 384
General Troubleshooting Information 385
Miscellaneous Problems and Solutions 385
Paper Curl 390
Power On 391
Engine Test 394
Display 395
Event Log 395
General Paper Path Troubleshooting 399
Paper Jams 400
Paper Path Test 402
Printer Messages 405
Control Panel Messages and Errors 405
Printer Message Tables 408
Self - Diagnostics on Paper-handling Devices 445
2000-sheet Input Tray Stand-alone Diagnostics 445
2 x 500-sheet Input Tray Standalone Diagnostics 449
7-bin Tabletop Mailbox Standalone Diagnostics 453
8-bin Mailbox Stand-alone Diagnostics 458
Information Pages 466
Menu Map 466
Configuration Page 468
Communication 473
Interface Troubleshooting 473
Image Quality 475
Check the Toner Cartridge 476
Image Quality Tables 477
Repetitive Defect Ruler 490
Image System Troubleshooting 492
High-Voltage Power Supply Check 493
Network Troubleshooting 495
Verify Host System Operation 497
Verify Network and Server Operation 497
Diagrams 498

8 Parts and Diagrams

How to Use the Part Lists and Diagrams 512
Ordering Parts 512
Accessories and Supplies 513
Common Hardware 513
Illustrations and Parts Lists 513
Alphabetical Parts List 549
Numerical Parts List 559

Download Service Manual And Resetter Printer at http://printer1.blogspot.com

Download Service Manual And Resetter Printer at http://printer1.blogspot.com

List of Figures

Figure 1-1 Sample Model and Serial Number Label for the Printer - - - - - - 6
Figure 1-2 Dimensions of Paper Handling Devices - - - - - - - - - - - - - - 8
Figure 1-3 HP LaserJet 8100/N/DN Engine - Front and Right Side View with Tray 1 Open - 14
Figure 1-4 Rear and Left Side View - 16
Figure 1-5 HP LaserJet 8100/N/DN Optional Paper Handling Devices - - - - 17
Figure 1-6 Sample 4% Page Coverage - 27
Figure 2-1 Printer Space Requirements (Top view) - - - - - - - - - - - - - 45
Figure 2-2 Printer Space Requirements (Side view) - - - - - - - - - - - - - 45
Figure 2-3 Printer Space Requirements (with Mailbox and Input Device) - - 46
Figure 3-1 Control Panel Layout - 50
Figure 3-2 Configuration Page (varies with installed options) - - - - - - - - 82
Figure 3-3 Menu Map Page (varies with installed options) - - - - - - - - - 83
Figure 4-1 Image Area Margins - 90
Figure 4-2 Tray Position Adjustment - 91
Figure 4-3 Tray 4 Position Adjustment - - - - - - - - - - - - - - - - - - - 92
Figure 5-1 Printer Functional Block Diagram - - - - - - - - - - - - - - - - 96
Figure 5-2 Low Voltage Power Distribution System - - - - - - - - - - - - - 97
Figure 5-3 Low Voltage Power Supply - - - - - - - - - - - - - - - - - - - 98
Figure 5-4 High Voltage Power Supply Contacts - - - - - - - - - - - - - - 99
Figure 5-5 Normal Mode vs EconoMode - - - - - - - - - - - - - - - - - - - 102
Figure 5-6 Image Formation Block Diagram - - - - - - - - - - - - - - - - - 105
Figure 5-7 Photosensitive Drum - 107
Figure 5-8 Drum Cleaning - 108
Figure 5-9 Primary Charging Roller - 109
Figure 5-10 Image Writing - 110
Figure 5-11 Image Development - 113
Figure 5-12 Image Transferring and Media Separation - - - - - - - - - - - - 114
Figure 5-13 Image Fusing - 115
Figure 5-14 Printer Paper Paths - 116
Figure 5-15 Printer Sensors, Solenoids, Clutches, Motors, and Fans - - - - - 118
Figure 5-16 2000-sheet Input Tray Paper Path - - - - - - - - - - - - - - - 121
Figure 5-17 2000-sheet Input Tray Sensors, Switches, Clutches, and Motors - 123
Figure 5-18 2 x 500-sheet Input Tray Paper Path - - - - - - - - - - - - - - 126
Figure 5-19 2 x 500-sheet input Tray Sensors and Switches - - - - - - - - - 127
Figure 5-20 7-bin Tabletop Mailbox Components (1 of 2) - - - - - - - - - - 130
Figure 5-21 7-bin Tabletop Mailbox Components (2 of 2) - - - - - - - - - - 131
Figure 5-22 7-bin Tabletop Mailbox Block Diagram - - - - - - - - - - - - - 135
Figure 5-23 8-bin Mailbox Paper Path - - - - - - - - - - - - - - - - - - - 136
Figure 5-24 8-bin Mailbox Sensors, Switches, Motors, and Controller PCA - - 138
Figure 5-25 Finisher Paper Path - 142

Download Service Manual And Resetter Printer at http://printer1.blogspot.com

Figure 5-26 Stapler Motors, Sensors, and Switches - - - - - - - - - - - - - - 142
Figure 5-27 Stapler Cycles - 145
Figure 5-28 Recommended C-link Configuration (Daisy Chain) - - - - - - - - 147
Figure 5-29 General Timing Diagram - 149
Figure 5-30 Parallel Cable Pin Assignments (C2946A) - - - - - - - - - - - - - 150
Figure 6-1 Phillips vs. Posidriv Screwdrivers - - - - - - - - - - - - - - - - - 153
Figure 6-2 Disk Drive - 155
Figure 6-3 Control Panel (1 of 2) - 165
Figure 6-4 Control Panel (2 of 2) - 166
Figure 6-5 AC Access Cover - 168
Figure 6-6 Back Cover - 169
Figure 6-7 Front Cover (1 of 2) - 170
Figure 6-8 Front Cover (2 of 2) - 171
Figure 6-9 Left Lower Cover - 172
Figure 6-10 Top Cover (1 of 2) - 173
Figure 6-11 Top Cover (2 of 2) - 174
Figure 6-12 Delivery Unit (1 of 2) - 176
Figure 6-13 Delivery Unit (2 of 2) - 177
Figure 6-14 Diverter Assembly - 179
Figure 6-15 Diverter Door Assembly - 180
Figure 6-16 Lower Right Door Assembly (1 of 3) - - - - - - - - - - - - - - - 181
Figure 6-17 Right Lower Door Assembly (2 of 3) - - - - - - - - - - - - - - - 182
Figure 6-18 Right Lower Door Assembly (3 of 3) - - - - - - - - - - - - - - - 183
Figure 6-19 Fan 1, Laser/Scanner (1 of 2) - - - - - - - - - - - - - - - - - - - 184
Figure 6-20 Fan 1, Laser/Scanner (2 of 2) - - - - - - - - - - - - - - - - - - - 185
Figure 6-21 Fan 2, Low Voltage Power Supply - - - - - - - - - - - - - - - - - 186
Figure 6-22 Fan 3, Formatter Fan - 187
Figure 6-23 Fan 4, Delivery Unit - 188
Figure 6-24 Fan 5 Removal (1 of 2) - 189
Figure 6-25 Fan 5 Removal (2 of 2) - 190
Figure 6-26 Tray 1 Removal (1 of 3) - 191
Figure 6-27 Tray 1 Removal (2 of 3) - 192
Figure 6-28 Tray 1 Removal (3 of 3) - 193
Figure 6-29 Tray 1 Pickup Unit Removal (1 of 4) - - - - - - - - - - - - - - - 194
Figure 6-30 Tray 1 Pickup Unit Removal (2 of 4) - - - - - - - - - - - - - - - 195
Figure 6-31 Tray 1 Pickup Unit Removal (3 of 4) - - - - - - - - - - - - - - - 196
Figure 6-32 Tray 1 Pickup Unit Removal (4 of 4) - - - - - - - - - - - - - - - 197
Figure 6-33 Feeder Assembly (1 of 2) - 198
Figure 6-34 Feeder Assembly (2 of 2) - 199
Figure 6-35 Formatter Assembly - 201
Figure 6-36 Fusing Assembly - 202
Figure 6-37 Laser/Scanner Assembly - 204
Figure 6-38 Main Gear Assembly (1 of 3) - 206
Figure 6-39 Main Gear Assembly (2 of 3) - 207
Figure 6-40 Main Gear Assembly (3 of 3) - 208
Figure 6-41 Main Motor - 209
Figure 6-42 Paper Input Unit - 210

Download Service Manual And Resetter Printer at http://printer1.blogspot.com

Figure 6-43 DC Controller PCA - 211
Figure 6-44 Output Paper Sensor PCA (1 of 4) - - - - - - - - - - - - - - - - - - 212
Figure 6-45 Output Paper Sensor PCA (2 of 4) - - - - - - - - - - - - - - - - - - 213
Figure 6-46 Output Paper Sensor PCA (3 of 4) - - - - - - - - - - - - - - - - - - 214
Figure 6-47 Output Paper Sensor PCA (4 of 4) - - - - - - - - - - - - - - - - - - 215
Figure 6-48 Paper Size PCA (1 of 3)- 216
Figure 6-49 Paper Size PCA (2 of 3)- 217
Figure 6-50 Paper Size PCA (3 of 3)- 218
Figure 6-51 High Voltage Power Supply - 219
Figure 6-52 Low Voltage Power Supply - 220
Figure 6-53 Registration Assembly (1 of 3) - - - - - - - - - - - - - - - - - - - 221
Figure 6-54 Registration Assembly (2 of 3) - - - - - - - - - - - - - - - - - - - 222
Figure 6-55 Registration Assembly (3 of 3) - - - - - - - - - - - - - - - - - - - 223
Figure 6-56 Tray 1 Feed Roller - 224
Figure 6-57 Tray 1 Separation Pad - 225
Figure 6-58 Tray 2 and 3, Pickup, Feed, and Separation Rollers - - - - - - - 226
Figure 6-59 Paper Input Unit Sensor (PS2) - - - - - - - - - - - - - - - - - - - 228
Figure 6-60 Registration Sensor (PS1) - 230
Figure 6-61 Face-up Solenoid Assembly, SL3 - - - - - - - - - - - - - - - - - - 231
Figure 6-62 Transfer Roller Assembly - 232
Figure 6-63 2000-sheet Input Tray Orientation - - - - - - - - - - - - - - - - - 236
Figure 6-64 2000-sheet Input Tray Front Cover - - - - - - - - - - - - - - - - - 237
Figure 6-65 2000-sheet Input Tray Back Cover - - - - - - - - - - - - - - - - - 238
Figure 6-66 2000-sheet Input Tray Left Cover - - - - - - - - - - - - - - - - - 239
Figure 6-67 2000-sheet Input Tray Right Cover - - - - - - - - - - - - - - - - - 240
Figure 6-68 2000-sheet Input Tray Main Drive Assembly - - - - - - - - - - - 241
Figure 6-69 2000-sheet Input Tray Paper Tray - - - - - - - - - - - - - - - - - 243
Figure 6-70 2000-sheet Input Tray Main Cable Harness - - - - - - - - - - - - 245
Figure 6-71 2000-sheet Input Tray Controller PCA - - - - - - - - - - - - - - 246
Figure 6-72 2000-sheet Input Tray Front LED PCA - - - - - - - - - - - - - - - 249
Figure 6-73 2000-sheet Input Tray Pickup Assembly - - - - - - - - - - - - - 250
Figure 6-74 2000-sheet Input Tray Power Supply - - - - - - - - - - - - - - - 252
Figure 6-75 2000-sheet Input Tray Rollers: Pickup, Feed, and Separation - - 255
Figure 6-76 2000-sheet Input Tray Paper Size and Paper Quantity Switch - - 258
Figure 6-77 2000-sheet Input Tray Paper Size and Paper Quantity Switch Assemblies (2 of 2) - 258
Figure 6-78 2000-sheet Input Tray Vertical Transfer Unit (VTU) - - - - - - - 259
Figure 6-79 2000-sheet Input Tray Tension Springs - - - - - - - - - - - - - - 261
Figure 6-80 2000-sheet Input Tray Locating Pins - - - - - - - - - - - - - - - 262
Figure 6-81 2000-sheet Input Tray Casters - - - - - - - - - - - - - - - - - - 263
Figure 6-82 2000-sheet Input Tray Adjustable Foot - - - - - - - - - - - - - - 264
Figure 6-83 Orientation of the 2 x 500-sheet Input Tray - - - - - - - - - - - 266
Figure 6-84 Back Cover - 267
Figure 6-85 Left Cover - 268
Figure 6-86 Vertical Transfer Unit (VTU) (1 of 3) - - - - - - - - - - - - - - 269
Figure 6-87 Vertical Transfer Unit (VTU) (2 of 3) - - - - - - - - - - - - - - 270
Figure 6-88 Vertical Transfer Unit (VTU) (3 of 3) - - - - - - - - - - - - - - 271

Download Service Manual And Resetter Printer at http://printer1.blogspot.com

Figure 6-89 Right Cover (1 of 3) - 272
Figure 6-90 Right Cover (2 of 3) - 273
Figure 6-91 Right Cover (3 of 3) - 274
Figure 6-92 Front Top Cover (1 of 3) - 275
Figure 6-93 Front Top Cover (2 of 3) - 276
Figure 6-94 Front Top Cover (3 of 3) - 277
Figure 6-95 Trays 4 and 5 (1 of 2) - 278
Figure 6-96 Trays 4 and 5 (2 of 2) - 279
Figure 6-97 Pickup Assembly (1 of 2) - 280
Figure 6-98 Pickup Assembly (2 of 2) - 281
Figure 6-99 Paper Deck Drive Assembly (1 of 2) - - - - - - - - - - - - - - - - 282
Figure 6-100 Paper Deck Drive Assembly (2 of 2) - - - - - - - - - - - - - - - - 283
Figure 6-101 Pickup, Feed, and Separation Rollers - - - - - - - - - - - - - - - 284
Figure 6-102 2 x 500-sheet Input Tray Controller PCA - - - - - - - - - - - - - 285
Figure 6-103 Tray-Size Sensing PCA (1 of 2) - - - - - - - - - - - - - - - - - - 286
Figure 6-104 Tray-Size Sensing PCA (2 of 2) - - - - - - - - - - - - - - - - - - 287
Figure 6-105 Power Supply - 288
Figure 6-106 Main Cable (1 of 2) - 289
Figure 6-107 Main Cable (2 of 2) - 290
Figure 6-108 Storage Paper Tray - 291
Figure 6-109 Front Door (Storage Area) - 292
Figure 6-110 Casters - 293
Figure 6-111 Foot Tip and Adjustable Foot Tip - - - - - - - - - - - - - - - - - 294
Figure 6-112 Locating Pins - 295
Figure 6-113 Front LED PCA - 296
Figure 6-114 Orientation of the 7-bin Tabletop Mailbox - - - - - - - - - - - - 298
Figure 6-115 Front cover (1 of 3) - 299
Figure 6-116 Front cover (2 of 3) - 300
Figure 6-117 Front cover (3 of 3) - 301
Figure 6-118 Back cover (1 of 2) - 302
Figure 6-119 Back cover (2 of 2) - 303
Figure 6-120 Top cover (1 of 4) - 304
Figure 6-121 Top cover (2 of 4) - 305
Figure 6-122 Top cover (3 of 4) - 306
Figure 6-123 Top cover (4 of 4) - 307
Figure 6-124 Mailbox Controller PCA - 308
Figure 6-125 Mailbox Power Supply - 309
Figure 6-126 Right Door Assembly (Paper Path Cover) (1 of 5) - - - - - - - - 310
Figure 6-127 Right Door Assembly (Paper Path Cover) (2 of 5) - - - - - - - - 311
Figure 6-128 Right Door Assembly (Paper Path Cover) (3 of 5) - - - - - - - - 311
Figure 6-129 Right Door Assembly (Paper Path Cover) (3 of 5) - - - - - - - - 312
Figure 6-130 Right Door Assembly (Paper Path Cover) (4 of 5) - - - - - - - - 313
Figure 6-131 Face-down Bins (1 of 3) - 314
Figure 6-132 Face-down Bins (2 of 3) - 315
Figure 6-133 Face-down Bins (3 of 3) - 316
Figure 6-134 Empty Bin Sensor PCA (1 of 2) - - - - - - - - - - - - - - - - - - 317
Figure 6-135 Empty Bin Sensor PCA (2 of 2) - - - - - - - - - - - - - - - - - - 318

Download Service Manual And Resetter Printer at http://printer1.blogspot.com

Figure 6-136 Full Bin and Interlock Sensor PCA (1 of 2) - - - - - - - - - - - - 319
Figure 6-137 Full Bin and Interlock Sensor PCA (2 of 2) - - - - - - - - - - - - 320
Figure 6-138 LED PCA - 321
Figure 6-139 Face-up Sensors PCA - 322
Figure 6-140 Reversing Mechanism Motor (1 of 2) - - - - - - - - - - - - - - - 323
Figure 6-141 Reversing Mechanism Motor (2 of 2) - - - - - - - - - - - - - - - 324
Figure 6-142 Face-up/Diverter Assembly (Flipper) (1 of 3) - - - - - - - - - - - 325
Figure 6-143 Face-up/Diverter Assembly (Flipper) (2 of 3) - - - - - - - - - - - 326
Figure 6-144 Face-up/Diverter Assembly (Flipper) (3 of 3) - - - - - - - - - - - 327
Figure 6-145 Short Tray 7 - 328
Figure 6-146 Solenoid Reversing Mechanism - - - - - - - - - - - - - - - - - - 329
Figure 6-147 Flipper Solenoid - 330
Figure 6-148 7-bin Tabletop Mailbox Handle - - - - - - - - - - - - - - - - - - 331
Figure 6-149 Latching Mechanism - 332
Figure 6-150 Cover Latch - 333
Figure 6-151 Orientation of the 8-bin Mailbox - - - - - - - - - - - - - - - - - 335
Figure 6-152 8-bin Mailbox Covers (Front and Back) - - - - - - - - - - - - - - 336
Figure 6-153 8-bin Mailbox Top Cover - 337
Figure 6-154 8-bin Mailbox Power Supply - - - - - - - - - - - - - - - - - - - 338
Figure 6-155 8-bin Mailbox Paper Bins and Blind Cover - - - - - - - - - - - - 339
Figure 6-156 8-bin Mailbox Flipper Assembly (1 of 3) - - - - - - - - - - - - - 340
Figure 6-157 8-bin Mailbox Flipper Assembly (2 of 3) - - - - - - - - - - - - - 341
Figure 6-158 8-bin Mailbox Flipper Assembly (3 of 3) - - - - - - - - - - - - - 342
Figure 6-159 8-bin Mailbox Delivery Head Motor - - - - - - - - - - - - - - - 343
Figure 6-160 8-bin Mailbox Transport Belt Motor - - - - - - - - - - - - - - - 344
Figure 6-161 8-bin Mailbox Input Paper Guide (1 of 2) - - - - - - - - - - - - 346
Figure 6-162 8-bin Mailbox Input Paper Guide (2 of 2) - - - - - - - - - - - - 347
Figure 6-163 8-bin Mailbox Metal Tape and Housing Assembly (1 of 2) - - - - 348
Figure 6-164 8-bin Mailbox Metal Tape and Housing Assembly (2 of 2) - - - - 349
Figure 6-165 8-bin Mailbox Controller PCA (1 of 2) - - - - - - - - - - - - - - 350
Figure 6-166 8-bin Mailbox Controller PCA (2 of 2) - - - - - - - - - - - - - - 351
Figure 6-167 8-bin Mailbox Anticurl Strings (1 of 2) - - - - - - - - - - - - - 352
Figure 6-168 8-bin Mailbox Anticurl Strings (2 of 2) - - - - - - - - - - - - - 353
Figure 6-169 8-bin Mailbox Delivery Head Assembly (1 of 4) - - - - - - - - - 354
Figure 6-170 8-bin Mailbox Delivery Head Assembly (2 of 4) - - - - - - - - - 355
Figure 6-171 8-bin Mailbox Delivery Head Assembly (3 of 4) - - - - - - - - - 356
Figure 6-172 8-bin Mailbox Delivery Head Assembly (4 of 4) - - - - - - - - - 357
Figure 6-173 8-bin Mailbox Interlock Switch - - - - - - - - - - - - - - - - - - 359
Figure 6-174 8-bin Mailbox Diagnostic LED PCA (1 of 2) - - - - - - - - - - - 360
Figure 6-175 8-bin Mailbox Diagnostic LED PCA (2 of 2) - - - - - - - - - - - 361
Figure 6-176 8-bin Mailbox User Status LED PCA (1 of 2) - - - - - - - - - - - 362
Figure 6-177 8-bin Mailbox User Status LED PCA (2 of 2) - - - - - - - - - - - 363
Figure 6-178 8-bin Mailbox Adjustable and Fixed Casters - - - - - - - - - - - 364
Figure 6-179 8-bin Mailbox Attachment Assembly - - - - - - - - - - - - - - - 365
Figure 6-180 Mailbox with Stapler, Stapler Removal or Installation - - - - - - 367
Figure 6-181 C-link Cable on Mailbox with Stapler - - - - - - - - - - - - - - 368
Figure 6-182 Back Plate (1 of 2) - 369

Download Service Manual And Resetter Printer at http://printer1.blogspot.com

Figure 6-183 Back Plate (2 of 2) - 370
Figure 6-184 Stapler Controller PCA (1 of 3) - 371
Figure 6-185 Stapler Controller PCA (2 of 3) - 372
Figure 6-186 Stapler Controller PCA (3 of 3) - 373
Figure 6-187 Top Cover Assembly - 374
Figure 6-188 Stapler Bed Assembly - 375
Figure 6-189 Hinges - 377
Figure 7-1 HP LaserJet Troubleshooting Process (1 of 2) - - - - - - - - - - 382
Figure 7-2 HP LaserJet Troubleshooting Process (2 of 2) - - - - - - - - - - 383
Figure 7-3 Fan Location and Airflow - 393
Figure 7-4 Engine Test Button - 394
Figure 7-5 Sample Event Log - 396
Figure 7-6 Paper Path Jam Locations - 401
Figure 7-7 Paper Path Test Source and Output Selection - - - - - - - - - - 403
Figure 7-8 Error Format for Paper Handling - - - - - - - - - - - - - - - - - - - 407
Figure 7-9 8-bin Mailbox LEDs Description - 458
Figure 7-10 8-bin Mailbox Power Supply Test Mode Switch - - - - - - - - - 459
Figure 7-11 Sample Menu Map - 467
Figure 7-12 Sample Configuration Page (1 of 2) - - - - - - - - - - - - - - - - 469
Figure 7-13 Sample Configuration Page (2 of 2) - - - - - - - - - - - - - - - - 470
Figure 7-14 Communications Link (C-link) Cables, Supported Daisy Chain Connections - 473
Figure 7-15 Repetitive Defect Ruler - 491
Figure 7-16 High Voltage Power Supply Contacts - - - - - - - - - - - - - - - 494
Figure 7-17 Sample JetDirect Configuration Page - - - - - - - - - - - - - - - 496
Figure 7-18 Printer Sensors and Switches - 499
Figure 7-19 Printer Motor, Clutches, and Solenoids - - - - - - - - - - - - - 500
Figure 7-20 DC Controller Inputs and Outputs (1 of 5) - - - - - - - - - - - - 501
Figure 7-21 DC Controller Inputs and Outputs (2 of 5) - - - - - - - - - - - - 502
Figure 7-22 DC Controller Inputs and Outputs (3 of 5) - - - - - - - - - - - - 503
Figure 7-23 DC Controller Inputs and Outputs (4 of 5) - - - - - - - - - - - - 504
Figure 7-24 DC Controller Inputs and Outputs (5 of 5) - - - - - - - - - - - - 505
Figure 7-25 Mailbox with Stapler Wiring Diagram - - - - - - - - - - - - - - - 506
Figure 7-26 2000-sheet Input Tray Controller PCA Inputs - - - - - - - - - - 507
Figure 7-27 2000-sheet Input Tray Controller PCA Outputs - - - - - - - - - 508
Figure 7-28 2000-sheet Input Tray Main Wiring Diagram - - - - - - - - - - - 509
Figure 7-29 8-bin Mailbox Main Wiring Diagram - - - - - - - - - - - - - - - - 510
Figure 8-1 HP LaserJet 8100/8100N/8100DN Printer and Paper-Handling Components - 514
Figure 8-2 Printer Covers and Doors - 518
Figure 8-3 Printer Internal Components (1 of 4) - - - - - - - - - - - - - - - 520
Figure 8-4 Printer Internal Components (2 of 4) - - - - - - - - - - - - - - - 522
Figure 8-5 Printer Internal Components (3 of 4) - - - - - - - - - - - - - - - 524
Figure 8-6 Printer Internal Components (4 of 4) - - - - - - - - - - - - - - - 526
Figure 8-7 Detail of Assemblies - 528
Figure 8-8 PCB Assembly Location Diagram - - - - - - - - - - - - - - - - - - 530
Figure 8-9 Face-up Solenoid Assembly - 531

Download Service Manual And Resetter Printer at http://printer1.blogspot.com

Figure 8-10 2000-sheet Input Tray Components (1 of 2) - - - - - - - - - - - - 532
Figure 8-11 2000-sheet Input Tray Components (2 of 2) - - - - - - - - - - - - 534
Figure 8-12 8-bin Mailbox Components (1 of 3) - - - - - - - - - - - - - - - - 536
Figure 8-13 8-bin Mailbox Components (2 of 3) - - - - - - - - - - - - - - - - 538
Figure 8-14 8-bin Mailbox Components (3 of 3) - - - - - - - - - - - - - - - - 540
Figure 8-15 Stapler Internal Components - - - - - - - - - - - - - - - - - - - 542
Figure 8-16 2 x 500-sheet Input Tray Internal Components- - - - - - - - - - 545
Figure 8-17 7-bin Tabletop Mailbox Internal Components - - - - - - - - - - 547

Download Service Manual And Resetter Printer at http://printer1.blogspot.com

Download Service Manual And Resetter Printer at http://printer1.blogspot.com

List of Tables

Table 1-1. Common features of the HP LaserJet 8100, HP LaserJet 8100 N, and HP LaserJet 8100 DN - 2
Table 1-2. Comparison of Printer Features - 3
Table 1-3. Paper Capacities and Sizes - 4
Table 1-4. Dimensions of Printer and Paper-handling Devices - - - - - - - - 7
Table 1-5. Dimensions of Output Devices - 8
Table 1-6. Electrical Specifications - 9
Table 1-7. Acoustic Emissions - 10
Table 1-8. Accessories and Options - 18
Table 1-9. Minimum Memory Requirements - - - - - - - - - - - - - - - - - - 25
Table 2-1. Printer and Toner Cartridge Environmental Conditions - - - - - - 47
Table 3-1. Control Panel Keys - 50
Table 3-2. Indicator Lights - 51
Table 3-3. Factory Default Settings- 55
Table 3-4. Information Menu - 58
Table 3-5. Information Menu - 58
Table 3-6. Information Menu - 59
Table 3-7. Paper Handling Menu - 60
Table 3-8. Print Quality Menu - 62
Table 3-9. Printing Menu - 64
Table 3-10. Configuration Menu - 67
Table 3-11. I/O Menu - 72
Table 3-12. EIO Menu - 74
Table 3-13. Resets Menu - 76
Table 3-14. Service Mode Menu Items - 77
Table 3-15. Key to Figure 3-2 - 82
Table 3-16. Key to Figure 3-3 - 83
Table 4-1. Cleaning the Printer - 88
Table 5-1. Printer Sensors, Solenoids, Clutches, Motors, and Fans - - - - - 117
Table 5-2. Paper Size Switches - 119
Table 5-3. 2000-sheet Input Tray Sensors, Switches, Clutches and Motors - 122
Table 5-4. 2000-sheet Input Tray Paper Quantity Switches - - - - - - - - - 124
Table 5-5. 2000-sheet Input Tray Paper Size Switches - - - - - - - - - - - 124
Table 5-6. 2 x 500-sheet Input Tray Sensors, Switches, and Motors- - - - - 127
Table 5-7. 2 x 500-sheet Input Tray Switches- - - - - - - - - - - - - - - - - 128
Table 5-8. 7-bin Tabletop Mailbox Sensors, Switches, and Motors - - - - - 131
Table 5-9. 8-bin Mailbox Sensors, Switches, Motors, and Controller PCA - - 137
Table 5-10. Stapler Motors, Sensors, and Switches - - - - - - - - - - - - - 143
Table 5-11. Printer Timing- 148
Table 6-1. Hardware Table- 162
Table 7-1. Major Steps for Troubleshooting- - - - - - - - - - - - - - - - - - 380

Download Service Manual And Resetter Printer at http://printer1.blogspot.com

Table 7-2. Paper Curl - 390
Table 7-3. Power On Defects or Blank Display - - - - - - - - - - - - - - - - - 391
Table 7-4. Fans - 393
Table 7-5. General Paper Path Troubleshooting Questions - - - - - - - - - - 399
Table 7-6. Engine Error Messages - 409
Table 7-7. 2000-sheet Input Tray Error Messages - - - - - - - - - - - - - - - 421
Table 7-8. 2 x 500-sheet Input Tray Error Messages - - - - - - - - - - - - - 425
Table 7-9. Envelope Feeder Error Messages - - - - - - - - - - - - - - - - - - 428
Table 7-10. 7-bin Tabletop Mailbox Error Messages - - - - - - - - - - - - - - 429
Table 7-11. 8-bin Mailbox Error Messages - - - - - - - - - - - - - - - - - - - 434
Table 7-12. Stapler Error Messages - 440
Table 7-13. Duplexer Error Messages - 443
Table 7-14. Paper Handling Controller Error Messages - - - - - - - - - - - - 444
Table 7-15. DIP Switch Settings - 447
Table 7-16. 2000-sheet Input Tray LED Status Interpretation - - - - - - - - - 448
Table 7-17. DIP Switch Settings for troubleshooting test procedures - - - - - 450
Table 7-18. Patterns of LED flashing (2-second pause between each pattern) 452
Table 7-19. DIP switch settings for troubleshooting test - - - - - - - - - - - - 453
Table 7-20. Patterns of Flashing LEDs - 455
Table 7-21. 8-bin Mailbox LED Status Interpretation - - - - - - - - - - - - - - 461
Table 7-22. Printer Devices Troubleshooting - - - - - - - - - - - - - - - - - - 472
Table 7-23. Image Quality - 475
Table 7-24. Blank (White) Page - 477
Table 7-25. Black Pages - 477
Table 7-26. Fading Print - 478
Table 7-27. Dropout - 480
Table 7-28. Black Lines (parallel or perpendicular to path) - - - - - - - - - - 480
Table 7-29. Toner Smear - 481
Table 7-30. Background Scatter - 482
Table 7-31. Repetitive Defects - 483
Table 7-32. Line at Edge of Paper - 484
Table 7-33. Misshapen Characters, Voids - - - - - - - - - - - - - - - - - - - 485
Table 7-34. Faulty Registration - 486
Table 7-35. Image Skew - 486
Table 7-36. Bubble Print - 487
Table 7-37. White Stripes Parallel to Path - - - - - - - - - - - - - - - - - - - 488
Table 7-38. Partial Blank Page - 488
Table 7-39. Compressed Print - 489
Table 7-40. Blank Portion in the Middle of the Page (Tray 4 Input only) - - - - 489
Table 8-1. Printer and Paper-Handling Components - - - - - - - - - - - - - 515
Table 8-2. Printer Covers and Doors - 519
Table 8-3. Printer Internal Components (1 of 4) - - - - - - - - - - - - - - - 521
Table 8-4. Printer Internal Components (2 of 4) - - - - - - - - - - - - - - - 523
Table 8-5. Printer internal Components (3 of 4) - - - - - - - - - - - - - - - 525
Table 8-6. Printer Internal Components (4 of 4) - - - - - - - - - - - - - - - 527
Table 8-7. Detail of Assemblies - 529
Table 8-8. PCB Assembly Locations - 530

Download Service Manual And Resetter Printer at http://printer1.blogspot.com

Table 8-9. Face-up Solenoid Assembly - 531
Table 8-10. 2000-sheet Input Tray Components (1 of 2) - - - - - - - - - - - - 533
Table 8-11. 2000-sheet Input Tray Components (2 of 2) - - - - - - - - - - - - 535
Table 8-12. 8-bin Mailbox Components (1 of 3) - - - - - - - - - - - - - - - - - 537
Table 8-13. 8-bin Mailbox Components (2 of 3) - - - - - - - - - - - - - - - - - 539
Table 8-14. 8-bin Mailbox Components (3 of 3) - - - - - - - - - - - - - - - - - 541
Table 8-15. Stapler Internal Components - 543
Table 8-16. 2 x 500-sheet Input Tray Internal Components - - - - - - - - - - - 545
Table 8-17. 7-bin Tabletop Mailbox Internal Components - - - - - - - - - - - 547
Table 8-18. Alphabetical Parts List - 549
Table 8-19. Numerical Parts List - 559

Download Service Manual And Resetter Printer at http://printer1.blogspot.com

Download Service Manual And Resetter Printer at http://printer1.blogspot.com

1 Product Information

Chapter Contents

Printer Features - 2
Paper Capacities and Sizes - - - - - - - - - - - - - - - - - - 4
Identification - 6
Specifications - 7
Media Selection Guidelines - - - - - - - - - - - - - - - - - - 11
Product Overview - 14
Paper-handling Devices, Accessories, and Options - - - - - 17
Service Approach - 26
Technical Assistance - 29
Warranty - 31
Regulatory Information - 33

Download Service Manual And Resetter Printer at http://printer1.blogspot.com

Printer Features

Table 1-1. Common features of the HP LaserJet 8100, HP LaserJet 8100 N, and HP LaserJet 8100 DN

Feature	Description
Print Speed	32 ppm letter or A4 17 ppm ledger (11 x 17) 18 ppm A3 20 ppm legal 20.5 ppm B4
Duplex Speed	12 ppm letter or A4 8.4 ppm ledger (11 x 17) or A3 9.0 ppm legal or B4
Text and Graphics Resolution	600 dpi with FastRes FastRes 1200 provides 1200 dpi quality at full speed plus Resolution Enhancement technology (REt)
Standard Printer Languages:	Enhanced PCL 6 PCL 5e for compatibility PostScript™ Level 2 emulation
Duty Cycle (Monthly Usage)	Up to 150,000 images
Internal Typefaces	45 PCL, 35 PostScript
Cartridge Slots	None
Power Control	PowerSave Mode
Control Panel	6 Keys, 3 LEDs, LCD Display (2-line, 16 characters per line)
EconoMode (draft quality)	Yes

Download Service Manual And Resetter Printer at http://printer1.blogspot.com

Table 1-2. Comparison of Printer Features

Features	HP LaserJet 8100 (C4214A)	HP LaserJet 8100 N (C4215A)	HP LaserJet 8100 D N (C4216A)
Memory:[1]	16 MB	16 MB	24 MB[2]
Standard Interfaces	IEEE 1284 ECP Parallel A to C connector	IEEE 1284 ECP Parallel A to C connector JetDirect EIO	IEEE 1284 ECP Parallel A to C connector JetDirect EIO
Duplexer	Optional	Optional	Standard
Hard Disk	Optional	Optional	Optional

1. Printer memory is optimized with Memory Enhancement technology (MEt). Printer has 16 MB RAM onboard. DIMMs available for use include 4, 8, 16, and 64 MB modules. See Chapter 8 for option product numbers. SDRAM available includes 4, 8, 16, and 64 MB modules. EDO RAM available includes 4, 8, and 16 MB modules. 32 MB SD RAM modules are compatible, but not available from HP. A maximum of 192 MB RAM can be configured.
2. 16 MB on-board RAM, and one 8 MB DIMM.

Download Service Manual And Resetter Printer at http://printer1.blogspot.com

Paper Capacities and Sizes

Table 1-3. Paper Capacities and Sizes

Tray or Bin	Capacity	Paper	Weight
Tray 1 (multipurpose)	up to 100 sheets	● Paper sizes: Letter, ISO A4, Executive, A5, Legal, 11 x 17, ISO A3, JIS B5, JIS B4, JPostD ● Custom sizes: Minimum: 3.67 x 7.5 in. (93 x 191 mm) Maximum: 11.7 x 17.7 in. (297 x 450 mm) **Note**: Duplex printing is available for paper sizes from 5 x 7.5 in. to 11 x 17 in. (127 x 191 mm to 297 x 420 mm). ● Other media types: transparencies, envelopes, and labels **Note**: Envelopes, transparencies, and labels are supported only from Tray 1.	16 to 53 lb Bond (60 to 199 g/m^2) Two-sided: 16 to 28 lb Bond (60 to 75 g/m^2)
Tray 2	up to 500 sheets	Paper sizes: Letter, ISO A4, Legal, JIS B4	16 to 28 lb (60 to 105 g/m^2)
Tray 3	up to 500 sheets	Paper sizes: Letter, ISO A4, Legal, JIS B4, ISO A3, 11 x 17	16 to 28 lb (60 to 105 g/m^2)
Face-down (Output bin)	up to 500 sheets	Paper sizes: Letter, ISO A4, A5, Executive, Legal, 11 x 17, ISO A3, JIS B5, JIS B4	
Face-up (Output bin)	up to 100 sheets	Paper sizes: Letter, ISO A4, A5, Executive, Legal, 11 x 17, ISO A3, JIS B5, JIS B4	
Optional 2000-sheet Input Tray (Tray 4)	up to 2,000 sheets	Paper sizes: Letter, ISO A4, Legal, JIS B4, ISO A3, 11 x 17	16 to 28 lb (60 to 105 g/m^2)
Optional Tray 4 (2 x 500-sheet Input Tray)	up to 500 sheets	Paper sizes: Letter, ISO A4, Legal, JIS B4	16 to 28 lb (60 to 105 g/m^2)
Optional Tray 5 (2 x 500-sheet Input Tray)	up to 500 sheets	Paper sizes: Letter, ISO A4, Legal, JIS B4, ISO A3, 11 x 17	16 to 28 lb (60 to 105 g/m^2)

Download Service Manual And Resetter Printer at http://printer1.blogspot.com

Table 1-3. Paper Capacities and Sizes (continued)

Tray or Bin	Capacity	Paper	Weight
5-bin Mailbox with Stapler and 8-bin Mailbox	up to 250 sheets per bin	Paper sizes: Letter, ISO A4, Legal, JIS B4, ISO A3, 11 x 17, envelopes, transparencies, and labels **Note**: Envelopes, transparencies, and labels are only supported in the Face-up (left) output bin. The staple bin only supports A4 and Letter paper sizes.	16 to 28 lb (60 to 105 g/m^2)
7-bin Tabletop Mailbox	up to 120 sheets per bin	Paper sizes: Letter, ISO A4, Legal **Note**: B5, JIS B4, 11 x 17, ISO A3, envelopes, transparencies, and labels are only supported in the Face-up Bin.	16 to 28 lb (60 to 105 g/m^2)
Envelope Feeder	up to 100 envelopes	Envelope sizes: Commercial #28, C5, DL, Monarch, ISO B5, JPostD	16 to 24 lb (60 to 90 g/m^2)
Duplexer		Paper sizes: Letter, Legal, 11 x 17, A3, A4, B4	16 to 28 lb (60 to 105 g/m^2)

Download Service Manual And Resetter Printer at http://printer1.blogspot.com

Model and Serial Numbers

The model and serial numbers are listed on identification labels located on the rear of the printer. The model number is alphanumeric, such as C4214A for the HP LaserJet 8100 printer.

The serial number contains information about the Country of Origin, the Revision Level, the Production Code, and production number of the printer.

The rear labels also contain power rating and regulatory information as shown in figure 1-1.

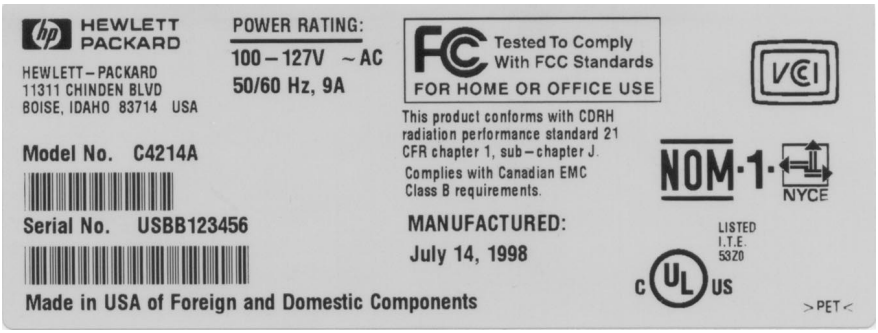

Figure 1-1 **Sample Model and Serial Number Label for the Printer**

The identification labels for the 2000-sheet Input Tray and 2 x 500-sheet Input Tray are located on the back panel, directly below the identification labels on the printer.

To locate the identification labels for the 8-bin Mailbox and 5-bin Mailbox with Stapler, detach the paper-handling device from the printer. The identification labels are located on the bottom right of the front side (side that attaches to printer).

To locate the identification labels for the 7-bin Tabletop Mailbox, detach the paper-handling device from the printer. The identification label is located on the bottom side of the back cover.

Download Service Manual And Resetter Printer at http://printer1.blogspot.com

Specifications

This section contains information on physical and electrical characteristics of the printer. For information on the printer site and environmental requirements (such as operating temperature and humidity, ventilation, etc.), see Chapter 2.

Table 1-4. Dimensions of Printer and Paper-handling Devices

Item	Height	Width	Depth	Weight
Printer only	21.30 in. (541 mm)	22.3 in. (566.42 mm)	20.50 in. (520 mm)	106 lbs. (48 kg) (without toner cartridge and with paper trays)
Printer with 2 x 500-sheet Input Tray or 2000-sheet Input Tray	40.20 in. (1021 mm)	24.76 in. (629 mm)	20.50 in. (520 mm)	160-164 lbs. (72.6-74.4 kg)
Toner cartridge	n/a	n/a	n/a	[1]Full: 114.3 oz (3,200 g) Empty: 78.6 oz (2,200 g)
2 x 500-sheet Input Tray	18.89 in. (480 mm) Including Transfer Door: 25.59 in. (650 mm)	24.76 in (629 mm)	20.50 in. (520 mm)	61 lbs. (27.9 kg.) without paper
2000-sheet Input Tray	18.89 in. (480 mm) Including Transfer Door: 25.59 in. (650 mm)	24.76 in. (629 mm)	20.50 in. (520 mm)	65 lbs. (29.5 kg)

1. Some toner will reside in the waste toner area of a toner cartridge when the toner supply is exhausted. Therefore toner cartridge weight may be an unreliable indication of remaining toner supply.

Download Service Manual And Resetter Printer at http://printer1.blogspot.com

Table 1-5. Dimensions of Output Devices

Item	Height	Width	Depth	Weight
8-bin Mailbox	35.23 in. (895 mm)	18.0 in. (457 mm)	20.0 in. (508 mm)	42.32 lbs. (19.2 kg)
Stapler	14.17 in. (360 mm)	19.68 in. (500 mm)	14.56 in. (370 mm)	10.50 lbs. (4.8 kg)
Duplexer	37.40 in. (950 mm)	15.31 in. (389 mm)	16.73 in. (425 mm)	7.93 lbs. (3.6 kg)
Envelope Feeder	5.11 in. (130 mm)	15.31 in. (389 mm)	14.37 in. (365 mm)	7.71 lbs. (3.5 kg)
7-bin Tabletop Mailbox	20.87 in. (530 mm)	15.0 in. (381 mm)	18.50 in. (470 mm)	30 lbs. (14 kg.)
Stand (only for the 7-bin Tabletop Mailbox)	18.90 in. (480 mm)	16.90 in. (430 mm)	18.90 in. (480 mm)	32.00 lb (14.5 kg)

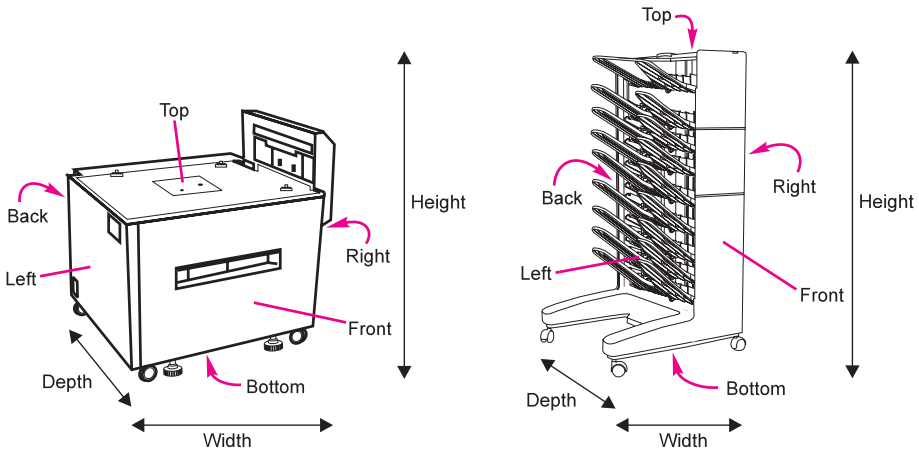

Figure 1-2 **Dimensions of Paper Handling Devices**

Download Service Manual And Resetter Printer at http://printer1.blogspot.com

Table 1-6. Electrical Specifications

Volts	Frequency	Amps[1]	Watts (average)
Printer			
120 Vac ± 10% 100 Vac ± 10%	50/60 Hz ± 2 Hz 50/60 Hz ± 2 Hz	11.2 max., 6.0 average	printing = 710 standby= 155 PowerSave Mode LaserJet 8100 =35 LaserJet 8100 N=45
220 Vac ± 10% 240 Vac ± 10%	50 Hz ± 2 Hz 50 Hz ± 2 Hz	5.9 max., 3.0 average	printing = 700 standby= 155 PowerSave Mode LaserJet 8100 =35 LaserJet 8100 N=45
2000-sheet Input Tray (Tray 4)			
120 Vac ± 10%	50/60 Hz ± 2 Hz	0.5 maximum 0.3 average	45 Watts Maximum
240 Vac ± 10%	50/60 Hz ± 2 Hz	0.3 maximum 0.2 average	45 Watts Maximum
8-bin Mailbox/5-bin Mailbox with Stapler			
100-240 Vac	50/60 Hz ± 2 Hz	0.5 @ 120v 0.25 @ 240v	45 Watts Maximum
2 x 500-sheet Input Tray (Trays 4 and 5)			
120 Vac ± 10%	50/60 Hz ± 2 Hz	0.9 maximum	47 Watts Maximum
240 Vac ± 10%	50/60 Hz ± 2 Hz	0.5 maximum	47 Watts Maximum
7-bin Tabletop Mailbox			
120 Vac ± 10%	50/60 Hz ± 2 Hz	0.5 maximum	28 Watts Maximum
240 Vac ± 10%	50/60 Hz ± 2 Hz	0.3 maximum	28 Watts Maximum

1. Operating current requirements.

Download Service Manual And Resetter Printer at http://printer1.blogspot.com

Table 1-7. Acoustic Emissions

Operation position per ISO 9296		**Printer (stand-alone)**	**Printer System[1]**
Printing	LPA dB(A)	59 db	62 db
Standby	LPA dB(A)	41 db	44 db
Bystander 1m per ISO 9296			
Printing	LPA dB(A)	53 db	56 db
Standby	LPA dB(A)	36 db	39 db
Sound Power per ISO 9296			
Printing	LWAD	6.9 bels (A)	7.2 bels (A)
Standby	LWAD	5.2 bels (A)	5.5 bels (A)

1. Printer System includes the 2000-sheet Input Tray (Tray 4) or 2 x 500-sheet Input Tray (Trays 4 and 5), 8-bin Mailbox/5-bin Mailbox with Stapler, Duplexer, and Envelope Feeder.

Note Printer system values are an estimate determined from the baseline values.

Download Service Manual And Resetter Printer at http://printer1.blogspot.com

Media Selection Guidelines

Note More detailed specifications are in the *HP LaserJet 8100, 8100 N, and 8100 DN Printers User Guide* and the *HP LaserJet Printer Family Paper Specification Guide*. See *Documentation* in “Accessories and Options” on page 18

Paper

To achieve the best possible print quality and avoid paper jams, follow these guidelines for selecting paper:

- Use only copier grade paper that meets all specifications in the paper specification guide. Avoid paper with embossed lettering, perforations, or texture that is too smooth or too rough.
- Colored paper should be of the same high quality as white photocopy paper. The pigments must withstand the fusing temperature of 392° F (200° C) for 0.1 second without deterioration. Do not use paper with a colored coating that was added after the paper was produced.
- Pre-printed forms must be printed with non-flammable, heat-resistant inks that do not melt, vaporize, or release hazardous emissions when subjected to the fusing temperature of 392° F (200° C) for 0.1 second.
- A small sample of a new print media should be tested before purchasing large quantities.

Envelopes

CAUTION To prevent severe damage to the printer, do not use envelopes that have windows, clasps, snaps, or any non-paper materials.

Print Envelopes to the Face-up Bin ONLY.

Envelopes can be printed from Tray 1 and from the optional Envelope Feeder. Choose envelopes that are well-constructed. They should lie flat and be sharply creased. They should not be wrinkled, nicked, or otherwise damaged. Envelope adhesive must be compatible with the heat and pressure of the fusing process.

Download Service Manual And Resetter Printer at http://printer1.blogspot.com

Adhesive Labels

Use the following guidelines when selecting labels:

CAUTION Tray 1 is required for printing adhesive labels.

Print labels to the Face-up Bin only.

This printer does not support use of labels with any exposed spaces.

Do not attempt to print on label sheets after any of the labels have been removed from the sheet. Damage to the printer may result.

- Labels must be arranged on the carrier sheet so that there are no exposed spaces on the sheet. Using label stock with spaces between rows or columns of labels can often result in labels peeling off during printing, causing serious jamming and possible damage to the printer.
- The top sheet (printing surface) must be of copier quality and provide good toner adhesion.
- The carrier sheet (backing sheet) must be compatible with the temperature and pressure of the fusing process, and must be coated for easy release of the top sheet.
- The adhesive must be stable at the 392° F (200° C) temperature encountered for 0.1 second in the fusing process, and must not produce emissions that exceed exposure levels or threshold limits established by OSHA and other safety agencies. Adhesives must not come into direct contact with any part of the printer.

A wide selection of suitable labels may be ordered through Hewlett-Packard. Available sizes are listed in the *HP LaserJet Printer Family Paper Specification Guide*.

Download Service Manual And Resetter Printer at http://printer1.blogspot.com

Transparencies

CAUTION Tray 1 is required for printing transparencies.

Print transparencies to the Face-up Bin only.

Transparencies used in HP LaserJet printers must be able to withstand the 392° F (200° C) temperature encountered in the printer's fusing process for 0.1 second. Suitable transparency film is available through Hewlett-Packard. See the *HP LaserJet Printer Family Paper Specification Guide* for details.

Storing Print Media

Follow these guidelines when stacking and storing print media:

- Store paper in its wrapper until ready to use.
- Re-wrap partially used packages of media before storing.
- Stack each carton upright and squarely on top of the other.
- Store envelopes in a protective box to avoid damaging the edges of the envelopes.
- Keep stored media away from temperature and humidity extremes.
- DO NOT store cartons or reams directly on the floor where they will absorb a higher moisture content. Instead, place cartons on a pallet or on shelves.
- DO NOT store individual reams in a manner that causes them to curl or warp along the edges.
- DO NOT stack more than six cartons on top of each other.
- DO NOT place anything on top of media, regardless of whether the paper is packaged or unpackaged.
- DO NOT store printed documents in vinyl folders (which may contain plasticizers) or expose the documents to petroleum-based solvents.

Shipping Print Media

When shipping print media through different environments, plastic wrap all cartons on the shipping pallet. When shipping media across bodies of water, wrap individual cartons as well. Packaging must protect the media from physical damage.

Download Service Manual And Resetter Printer at http://printer1.blogspot.com

External View of HP LaserJet 8100/N/DN Engine

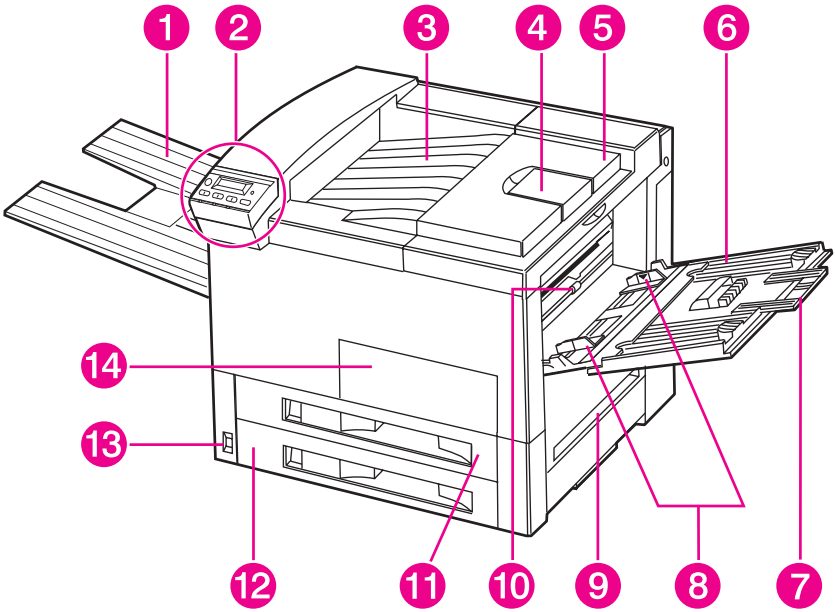

Figure 1-3 **HP LaserJet 8100/N/DN Engine - Front and Right Side View with Tray 1 Open**

1 Face-up Bin

2 Control Panel

3 Face-down Bin

4 Adjustable Paper Stop

5 Top Cover

6 Tray 1

7 Tray 1 Extensions

8 Tray 1 Paper Width Guides

9 Input Slot for 2000-sheet Input Tray (Tray 4) or 2 x 500-sheet Input Tray (Trays 4 and 5)

Download Service Manual And Resetter Printer at http://printer1.blogspot.com

10 Tray 1 Pickup Roller

11 Tray 2

12 Tray 3

13 On/Off Switch

14 Front Access Door

Not shown:

- Left Door
- Duplexer (internal)
- 5-bin Mailbox with Stapler
- 2 x 500-sheet Input Tray
- 7-bin Tabletop Mailbox and stand
- 2000-sheet Input Tray
- Envelope Feeder
- 8-bin Mailbox
- Printer stand

Note You will need a 7-bin Tabletop Mailbox stand for the input device.

Download Service Manual And Resetter Printer at http://printer1.blogspot.com

Formatter Assemblies

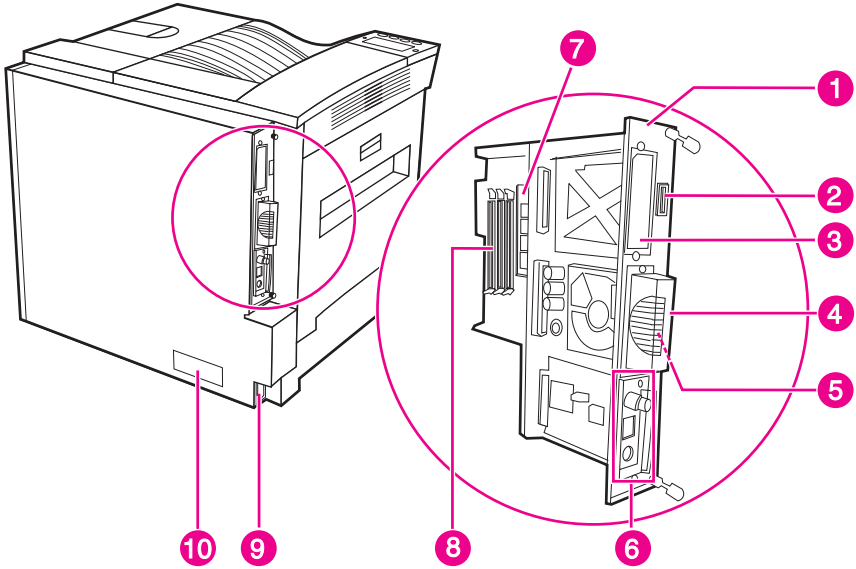

Figure 1-4 **Rear and Left Side View**

1 Formatter Pan Assembly

2 Parallel IEEE 1284 Interface Port

3 EIO Slot 3 Location

4 EIO Slot 2 Location [Hard Disk Accessory Location (optional for LJ 8100/N/DN)

5 External Paper Handling Controller Port (behind EIO Slot 2/Hard Disk Accessory Location)

6 EIO Slot 1 Location

7 Firmware DIMM

8 DIMM Slots (3)

9 AC Power Connector

10 Model and Serial Number Label

Download Service Manual And Resetter Printer at http://printer1.blogspot.com

Paper-handling Devices, Accessories, and Options

The accessories and optional equipment for the HP LaserJet 8100, 8100 N, and 8100 DN printers is shown in figure 1-5 and described in table 1-8.

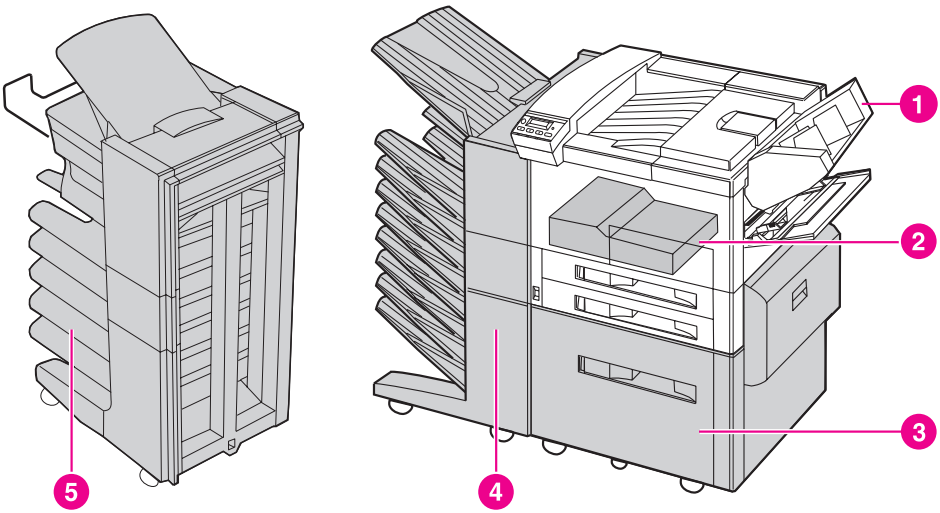

Figure 1-5 **HP LaserJet 8100/N/DN Optional Paper Handling Devices**

1 Envelope Feeder

2 Duplexer (internal)

3 2000-sheet Input Tray (Tray 4)
(Not shown) 2 x 500-sheet Input Tray (Trays 4 and 5)

4 8-bin Mailbox (provides mailbox, job separation, collating, and job stacking)

5 5-bin Mailbox with Stapler (provides mailbox, job separation, job stacking, collating and stapling)

Not shown:

- 7-bin Tabletop Mailbox Stand
- 7-bin Tabletop Mailbox

Download Service Manual And Resetter Printer at http://printer1.blogspot.com

Ordering Information

Use only accessories specifically designed for this printer. To order an accessory, contact an HP-authorized service or support provider.

Table 1-8. Accessories and Options

	Item	Description or Use	Order Number
Paper Handling	2 x 500-sheet Input Tray	Two 500-sheet Input Trays.	C4780A
	2000-sheet Input Tray	2000-sheet Input Tray.	C4781A
	Envelope Feeder	Automatically feeds up to 100 envelopes.	C3765A
	Duplex Printing Accessory (duplexer - standard on DN model)	Allows automatic printing on both sides of paper.	C4782A
	7-bin Tabletop Mailbox	Each of the 7 Face-down output bins holds 120 sheets of paper. One Face-up Bin holds 100 sheets of paper. Designed for tabletop use.	C4783A
	8-bin Mailbox	Each of the 8 output bins holds 250 sheets of paper.	C4785B
	5-bin Mailbox with Stapler	Each of the 5 output bins holds 250 sheets of paper. Provides job separation by stapling jobs.	C4787A

Download Service Manual And Resetter Printer at http://printer1.blogspot.com

Table 1-8. Accessories and Options (continued)

	Item	Description or Use	Order Number
Printer Stands	Printer Stand	Used in place of the 2000-sheet Input Tray or the 2 x 500-sheet Input Tray when an 8-bin Mailbox or a 5-bin Mailbox with Stapler is attached.	C2975A
	Stand for 7-bin Tabletop Mailbox	Allows 7-bin Tabletop Mailbox to be used when printer is mounted on 2 x 500-sheet Input Tray, 2000-sheet Input Tray, or printer stand.	C4784A

Download Service Manual And Resetter Printer at http://printer1.blogspot.com

Table 1-8. Accessories and Options (continued)

	Item	Description or Use	Order Number
Printing Supplies	HP Multipurpose Paper (Other HP media is available where office products are sold.)	HP brand paper for a variety of uses (1 box of 10 reams, 500 sheets each). To order a sample, in the U.S. call 1-800-471-4701.	HPM1120
	HP LaserJet Paper (Other HP media is available where office products are sold.)	Premium HP brand paper for use with HP LaserJet printers (1 box of 10 reams, 500 sheets each). To order a sample, in the U.S. call 1-800-471-4701.	HPJ1124
	Toner Cartridge (20,000 images)	Replacement HP Microfine toner cartridge.	C4182X

Download Service Manual And Resetter Printer at http://printer1.blogspot.com

Table 1-8. Accessories and Options (continued)

	Item	Description or Use	Order Number
Memory, Fonts, and Mass Storage	Dual In-line Memory Module (DIMM) (100-pin)	Boosts the ability of the printer to handle large print jobs (maximum 192 MB with HP brand DIMMs).	
	EDO DIMMs (100-pin)	4 MB 8 MB 16 MB	C4135A C4136A C4137A
	SDRAM DIMMs (100-pin)	4 MB 8 MB 16 MB 32 MB 64 MB	C4140A C4141A C4142A C4143A C3913A
	Flash DIMM (100-pin)	Permanent storage for fonts and forms:	
		2 MB 4 MB	C4286A C4287A
	Font DIMM (100-pin)	8 MB Asian ROM: traditional Chinese simplified Chinese	 C4292A C4293A
	Hard Disk	Permanent storage for fonts and forms (1.4 MB maximum storage for fonts). Enables Raster Image Processor (RIP) ONCE mopying of print jobs that are too large to RIP ONCE mopy in RAM.	C2985A
Cable and Interface Accessories	Parallel Cables	3 Meter IEEE-1284 cable 10 Meter IEEE-1284 cable	C2946A C2947A
	Macintosh Network Cable Kit	For PhoneNET or LocalTalk connection.	92215N

Download Service Manual And Resetter Printer at http://printer1.blogspot.com

Table 1-8. Accessories and Options (continued)

	Item	Description or Use	Order Number
Cable and Interface Accessories	Enhanced I/O Cards	HP JetDirect print server multi-protocol EIO network cards:	
		Ethernet (RJ-45 only)	J3110A
		Ethernet (RJ-45 and BNC) and LocalTalk	J3111A
		Token Ring (RJ-45 and DB-9)	J3112A
		Fast Ethernet 10/100Base-TX (RJ-45 only)	J3113A
	Power Box	For connecting an 8-bin mailbox to the printer when the printer is on a printer stand. This item is included with the 2000-sheet Input Tray and the 2 x 500-sheet Input Tray.	C4789A
Maintenance Accessory	Preventive Maintenance Kit	For 110V units	C3914A C3914-69001
		For 220V units	C3915A C3915-69001
Documentation	*HP LaserJet Printer Family Paper Specification Guide*	A guide to using paper and other print media with HP LaserJet printers.	5040-9092
	HP JetDirect Print Server Software Installation Guide	A guide to installing and using the JetDirect Print Server software with HP LaserJet printers. Contains information for multiple operating systems.	*5967-2244 (English)*
	PCL 5/PJL Technical Reference Documentation Package	A guide to using printer commands with HP LaserJet printers.	5021-0377
Documentation	*HP LaserJet 8100, 8100 N, and 8100 DN User Guide*	This is an online user guide provided on compact disc.	C4214-60103

Download Service Manual And Resetter Printer at http://printer1.blogspot.com

Table 1-8. Accessories and Options (continued)

Item	Description or Use	Order Number
User Documentation Bundle	An additional copy of the getting started guide and the ready reference guide.	C4214-99001 (English)
HP LaserJet 8100, 8100 N, and 8100 DN Printers Service Manual	Service Manual.	C4214-91000

Download Service Manual And Resetter Printer at http://printer1.blogspot.com

Hard Disk

The printer hard disk accessory is optional for the HP LaserJet 8100/N/DN printers. It can be used to permanently store downloaded fonts and forms in the printer. Unlike the standard printer memory, permanently downloaded items remain on the hard disk even when the printer is powered off.

Fonts downloaded to the hard disk are available to all users of the printer.

HP LaserJet Resource Manager

The HP LaserJet Resource Manager allows you to control hard disk and flash memory features not found in the drivers. Use the HP LaserJet Resource Manager to initialize disk and flash memory and to download, delete and manage fonts to disk, across networks. HP LaserJet Resource Manager is not available for the Macintosh.

Macintosh users can use the HP LaserJet Utility, and Windows® users can use the HP printer driver to download fonts. The printer hard disk can also be write-protected through software for additional security. See the on-line help associated with your HP software for more information.

For the Macintosh environment, see the on-line help in the HP LaserJet Utility Guide included with the HP LaserJet Utility software. For the Windows environment, see your HP Windows driver on-line help.

Determining Memory Requirements

The amount of memory you need depends on the types of documents you print. With the PCL printer language, the printer can print most text and graphics at 300 or 600 dpi without additional memory.

Add memory to your printer if you

- Commonly print complex graphics.
- Use many downloaded fonts.
- Print complex documents.
- Use advanced functions (such as I/O Buffering and Resource Saving).

For the HP LaserJet 8100 printer, you can add up to 3 x 64 MB DIMMS for a total of 192 MB of usable memory. If you have the HP LaserJet 8100 DN printer, you can remove the 8 MB DIMM and add up to 3 64 MB DIMMs for a total of 192 MB of usable memory.

Download Service Manual And Resetter Printer at http://printer1.blogspot.com

Table 1-9 presents the amount of memory required for the most common print jobs performed with the HP LaserJet 8100/N/DN using 600-dpi printing.

Table 1-9. Minimum Memory Requirements

Print Job	Paper Size	PCL Minimum Memory Requirements	PostScript Emulation Minimum Memory Requirements
single-sided printing	Letter, A4, Legal	16 MB	16 MB
	11 x 17 in, A3	16 MB	16 MB
two-sided printing	Letter, A4	16 MB	16 MB
	Legal	16 MB	16 MB
	11 x 17 in, A3	24 MB	24 MB

Download Service Manual And Resetter Printer at http://printer1.blogspot.com

Service Approach

Repair of the printer normally begins with a three-step process:

- Step 1: Isolate the problem to the major system, i.e. the host computer, the network and/or server, or the printer system.
- Step 2: Determine if the problem is located in the paper-handling devices or in the printer engine.
- Step 3: Troubleshoot the problem using the procedures in Chapter 7.

Once a faulty part is located, repair is usually accomplished by assembly level replacement of Field Replaceable Units (FRUs). Some mechanical assemblies may be repaired at the subassembly level. Replacement of components on the printed circuit assemblies is not supported by Hewlett-Packard.

Ordering Parts

Field replaceable part numbers are listed in Chapter 8 of this manual. Replacement parts may be ordered from HP's Support Materials Organization (SMO), or Support Materials Europe (SME).

Phone numbers

PSD/SMO (Product Support Division/Support Materials Organization)

1-800-227-8164 (U.S. Only)

PSD/SME (Product Support Division/Support Materials Europe)

(49 7031) 142253

HP's Distribution Center (HPD)

1-303-353-7650

Download Service Manual And Resetter Printer at http://printer1.blogspot.com

Exchange Program

HP offers remanufactured assemblies for some parts. These are identified in Chapter 8 and can be ordered through Parts Direct Ordering (PDO), Support Materials Organization (PSD/SMO), or Support Materials Europe (PSD/SME).

Consumables

The printer has two consumables; the toner cartridge and staple cartridges, which may be ordered directly from Hewlett-Packard. See Chapter 8 for ordering information.

Toner Cartridge Life

The Toner Cartridge is designed to simplify replacement of the major “consumable” parts. The toner cartridge contains the printing mechanism and a supply of toner.

At 4% page coverage, a toner cartridge is guaranteed to print approximately 20,000 images (see figure 1-6).

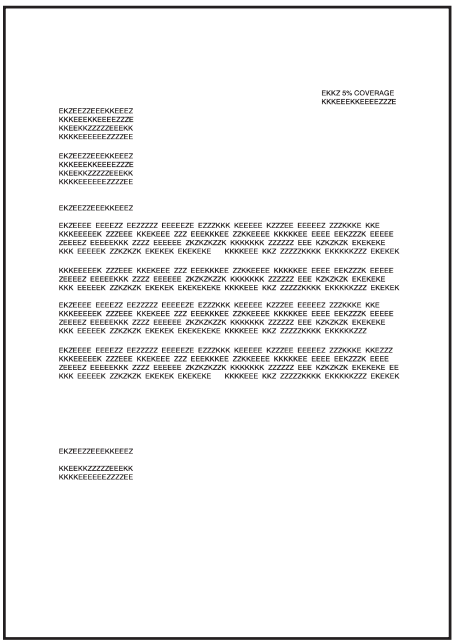

Figure 1-6 **Sample 4% Page Coverage**

Download Service Manual And Resetter Printer at http://printer1.blogspot.com

The toner cartridge may print less than 20,000 images if routinely printing very dense print. Conversely, when routinely printing images with less coverage (such as short memos), or in EconoMode, the toner cartridge may print more than 20,000 images. However, EconoMode does not extend toner cartridge component life.

Note For best results, always use a new toner cartridge before the expiration date stamped on the toner cartridge box.

Refilled Toner Cartridges and Non-HP Staple Cartridges

While Hewlett-Packard does not prohibit the use of refilled toner cartridges and non-HP staple cartridges during the warranty period or while under a maintenance contract, their use is not supported for the following reasons:

- Repairs resulting from the use of refilled toner cartridges and non-HP staple cartridges are not covered under the Hewlett-Packard warranty or maintenance contract.
- Hewlett-Packard has no control or process to ensure that a refilled toner cartridge or non-HP staple cartridge functions at the high level of reliability of a new HP LaserJet toner cartridge or HP LaserJet staple cartridge. Also, Hewlett-Packard cannot predict the long term reliability effect on the printer when using different toner formulations found in refilled cartridges.
- The print quality of HP LaserJet toner cartridges influences the customer's perception of the printer. Hewlett-Packard has no control over the actual print quality of a refilled toner cartridge.

Recycling Toner Cartridges

In order to reduce waste, Hewlett-Packard uses a recycling program for used toner cartridges. Cartridge components that do not wear out are recycled, as are plastics and other materials. Hewlett-Packard pays the shipping costs from the user to the recycling plant. For each cartridge returned, HP donates one U.S. dollar to be shared by the Nature Conservancy and the National Wildlife Federation. To join this recycling effort, follow the instructions inside the toner cartridge box.

Download Service Manual And Resetter Printer at http://printer1.blogspot.com

Technical Assistance

HP ASAP (Automated Support Access Program) provides free technical support information 24 hours a day, 7 days a week. The ASAP system includes HP FIRST, explained below. The ASAP service requires a touchtone phone.

HP FIRST (Fax Information Retrieval Support Technology)

HP FIRST (Fax Information Retrieval Support Technology) is a phone-in fax service providing technical information for HP LaserJet users as well as service personnel. Receiving a fax requires a type 3 facsimile machine or fax card. Service related information includes:

- Service notes (HP Authorized dealers)
- Application notes
- Product Data Sheets
- Material Safety Data Sheets (MSDS)
- Typeface and accessory information
- Printer support software information
- Toner information
- Driver request form and Software Matrix.

HP FIRST, U.S.

Call the HP ASAP system (1-800-333-1917) and follow the voice prompts to enter HP FIRST.

HP FIRST, Europe

Call HP FIRST at one of the following numbers:

- U.K., 0800-96-02-71
- Belgium (Dutch), 078-11-19-0
- Switzerland (German), 155-1527
- Netherlands, 06-02-22-420
- Germany, 0130-810061
- Austria, 0660-8128

For English service outside the above countries, (31) 20-681-5792.

Download Service Manual And Resetter Printer at http://printer1.blogspot.com

Internet

Anonymous FTP library service is available for around-the-clock access to drivers, software, and technical support information for HP peripheral and computer products. Please note that paths may change without notice. Access the Internet or FTP address and use the menus to locate the software or support of your choice.

URL for Access HP: http://www.hp.com
URL for Software and Support: http://www.hp.com/go/cposupport
FTP address: ftp.hp.com
Login: anonymous
Password: your Internet name (or user identification)

FTP Path for Drive Software: /pub/printers
FTP Path for Network Software: /pub/networking

World Wide Web

Download printer driver software using www.hp.com/cposupport/eschome.html.

HP Reseller Sales and Service Support Line (US Only)

The Hardware Technical Support Center (HTSC) is available for technical support to assist Hewlett-Packard authorized service technicians. The HTSC can be reached at 1-800-544-9976 between 7:00 A.M. and 6:00 P.M. Mountain Standard Time, Monday, Tuesday, Thursday, and Friday. On Wednesdays the office closes at 4:00 P.M.

Other Areas

Outside of North America and Europe, contact your local HP sales office for assistance in obtaining technical support.

Download Service Manual And Resetter Printer at http://printer1.blogspot.com

Warranty

This warranty entitles you to standard warranty services for your printer and accessories and is available from HP worldwide. However, there may be local variations in the level of warranty service. You should contact the local HP Service Center to check for the applicable local warranty in your country or province.

One-Year On-Site Limited Warranty

Hewlett-Packard warrants its computer hardware products against defects in materials and workmanship for a period of one year from purchase by the end user. During the warranty period, HP will, at its option, either repair or replace products which prove to be defective.

The warranty period begins either on the date of delivery or, where the purchase price includes installation by Hewlett-Packard, on the date of installation.

Should HP be unable to repair or replace the product within a reasonable amount of time, you will be entitled to a refund of the purchase price if you return the product.

To have your printer serviced by HP you should contact the closest HP Service Center.

Exclusions

The warranty on your HP LaserJet 8100/N/DN family printer shall not apply to defects resulting from:

- Improper or inadequate maintenance by customer.
- Customer supplied software or interfacing.
- Unauthorized modification or misuse.
- Operation outside of the environmental specifications for the product.
- Operation of non-supported printing media.
- Duty cycle abuse maximum (see the note on the following page).
- Using a mechanical switchbox with the printer without a designated surge protector.
- Improper site preparation and maintenance.
- Failure to perform key operator maintenance every 350,000 images.
- Use of non-HP toner cartridges (see the following explanation), memory boards, interface boards, or staple cartridges.

Download Service Manual And Resetter Printer at http://printer1.blogspot.com

Note

The use of non-Hewlett-Packard consumables or accessories alone does not affect either your warranty or any maintenance contract you may have purchased. However, if an HP LaserJet printer failure or damage is found to be attributable directly to the use of a non-HP toner cartridge, HP will not repair the printer free-of-charge. In this case, standard time-and-materials charges will be applied to service your printer for that particular failure or damage.

Operation of the printer beyond the limit of its duty cycle (printing greater than the equivalent of 150,000 images per month) shall be deemed printer abuse and all repairs thereafter will be billed on a time-and-materials basis.

If you are using a mechanical switch box, ensure that it is equipped with a surge protector. Damage to your printer could occur from the use of unprotected mechanical switch boxes.

Warranty Limitations

The warranty set forth above is exclusive and no other warranty, whether written or oral, is expressed or implied. Hewlett-Packard specifically disclaims the implied warranties of merchantability and fitness for a particular purpose.

Service During the Warranty Period

If your hardware should fail during the warranty period, contact an authorized HP dealer or an HP Customer Service Center.

Service After the Warranty Period

If your hardware fails after the warranty period, contact an authorized HP dealer or your local Customer Service Center. If you have an HP Maintenance Agreement, request service under your agreement.

Download Service Manual And Resetter Printer at http://printer1.blogspot.com

Regulatory Information

FCC Regulations

This equipment has been tested and found to comply with the limits for a Class B digital device, pursuant to Part 15 of the FCC rules. These limits are designed to provide reasonable protection against harmful interference in a residential installation. This equipment generates, uses, and can radiate radio frequency energy. If this equipment is not installed and used in accordance with the instructions, it may cause harmful interference to radio communications. However, there is no guarantee that interference will not occur in a particular installation. If this equipment does cause harmful interference to radio or television reception, which can be determined by turning the equipment off and on, the user is encouraged to try to correct the interference by one or more of the following measures:

- Reorient or relocate the receiving antenna.
- Increase separation between equipment and receiver.
- Connect equipment to an outlet on a circuit different from that to which the receiver is located.
- Consult your dealer or an experienced radio/TV technician.

Note Any changes or modifications to the printer that are not expressly approved by HP could void the user's authority to operate this equipment.

Use of a shielded interface cable is required to comply with the Class B limits of Part 15 of FCC rules.

Download Service Manual And Resetter Printer at http://printer1.blogspot.com

Environmental Product Stewardship

Protecting the Environment

Hewlett-Packard Company is committed to providing quality products in an environmentally-sound manner. The printer has been designed to minimize impacts on the environment.

The printer design eliminates:

Ozone Production	The printer uses charging rollers in the electrophotographic process and therefore generates no appreciable ozone gas (0_3).
CFC Usage	Class I U.S. Clean Air Act stratospheric ozone-depleting chemicals (chlorofluorocarbons [CFCs], for example) have been eliminated from the manufacturing of the printer and packaging.

The printer design reduces:

Energy Consumption	Energy usage drops from 500/505 (110V/220V units) watts (W) during printing to as little as 35/40 (110V/220V units) W while in low-power (Power Save) mode. This saves energy without affecting the high performance of the printer. This product qualifies for the ENERGY STAR Program (U.S. and Japan). ENERGY STAR is a voluntary program established to encourage the development of energy-efficient office products. The ENERGY STAR name is a registered service mark of the U.S. Environmental Protection Agency. As an ENERGY STAR partner, Hewlett-Packard Company has determined that this product meets ENERGY STAR Guidelines for energy efficiency.
Toner Consumption	EconoMode uses about 50% less toner.
Paper use	The printer's optional duplexing feature, which provides for two-sided printing, reduces paper usage and the resulting demands on natural resources.

Download Service Manual And Resetter Printer at http://printer1.blogspot.com

The design of the printer facilitates the recycling of:

Plastics	Plastic parts have material identification markings, according to international standards, which enhance the ability to identify plastics for proper disposition at the end of the printer's life.
HP Toner Cartridges	In many countries, this product's toner cartridge/drum can be returned to HP using the prepaid shipping label and instructions included inside each new HP Toner Cartridge box. If your country is not listed in the recycling guide, call your local HP Sales and Service Office for further instructions. **HP Cartridge Recycling Program information:** Since 1990, the HP LaserJet Toner Cartridge Recycling Program has collected more than twelve million cartridges that otherwise may have been discarded into landfills. Once a cartridge is returned, it is disassembled and reusable components are cleaned and inspected for quality conformance. After passing strict inspection procedures, materials such as nuts, screws, and clips are reclaimed and used to produce new cartridges. Remaining materials are melted down and used as raw materials for a variety of other products. Over 95 percent (%) of the weight of returned materials is recycled. For more information in the U.S., call (1) (800) 340-2445 or contact the HP LaserJet Supplies Website at http://ljsupplies.com/planetpartners. Non-US customers can call the local HP Sales and Service Office for further information regarding the HP Toner Cartridge Recycling Program.
Paper	The printer is suited for the use of recycled papers when the paper meets the guidelines outlined in the *HP LaserJet Printer Family Paper Specifications Guide*.

To ensure printer longevity, HP provides the following:

Extended Warranty	HP SupportPack covers the printer and all HP-supplied internal components. It is a three-year warranty from the date of purchase. HP SupportPack must be purchased by the customer within 30 days of product purchase. Information on HP SupportPack is available by calling your local HP FIRST number.
Spare Parts and Consumables Availability	Spare parts and consumable supplies for this product will be made available for at least five years after production has stopped.

Download Service Manual And Resetter Printer at http://printer1.blogspot.com

Material Safety Data Sheet

The Toner Cartridge/Drum MSDS can be obtained by calling the U.S. HP FIRST (Fax Information Retrieval Support Technology) at (1) (800) 231-9300. Use Index number 7 for a listing of the Toner Cartridge/Drum Material/Chemical Safety Data Sheets. Non-U.S. customers should refer to the HP Support pages at the front of this user guide for appropriate phone numbers and information. For more information in the U.S., call (1) (800) 340-2445 or contact the HP LaserJet Supplies Website at http://ljsupplies.com/planetpartners

Download Service Manual And Resetter Printer at http://printer1.blogspot.com

Environmental Conformity

Plastics

Plastic parts have material identification markings, according to international standards, which enhance the ability to identify plastics for proper disposition at the end of the printer's life. The plastics used in the printer housing and chassis are technically recyclable.

Printer and Parts

Design for recycling has been incorporated into the printer and its accessories. The number of materials has been kept to a minimum while ensuring proper functionality and high product reliability. Dissimilar materials have been designed to separate easily. Fasteners and other connections are easy to locate, access, and remove with common tools. High priority parts have been designed to be accessed quickly for efficient disassembly and repair. Plastic parts have been primarily designed in two colors to enhance recycling options. A few small parts are colored specifically to highlight customer access points.

HP disposes of returned products in an environmentally sound manner. Many of the functional parts are recovered, tested, and reused as fully-warrantied service parts. Used printer parts are not placed into new product manufacturing. The remainder of the product parts are recycled, if possible. For product take-back information, contact your local HP Sales and Service Office.

Paper

The printer is suited for the use of recycled papers when the paper meets the guidelines outlined in the *HP LaserJet Printer Family Paper Specifications Guide*. The printer is suited for the use of recycled paper according to DIN 19 309.

Acoustics

It is advisable to place printers with a sound power level of Lwad of 6.3 Bel (A) or higher into a separate or divided up room.

Download Service Manual And Resetter Printer at http://printer1.blogspot.com

DECLARATION OF CONFORMITY

according to ISO/IEC Guide 22 and EN 45014

Manufacturer's Name: Hewlett-Packard Company

Manufacturer's Address: 11311 Chinden Boulevard
Boise, Idaho 83714-1021, USA

declares, that the product

Product Name: LaserJet 8100 / 8100N / 8100DN

Model Number: C4214A / C4215A / C4216A

Product Options: ALL

conforms to the following Product Specifications:

Safety: IEC 950:1991+A1+A2+A3+A4/ EN 60950:1992+A1+A2+A3+A4
IEC 825-1:1993/EN 60825-1:1994 Class 1 (Laser/LED)

EMC: CISPR 22:1993 / EN 55022:1994 Class B[1)]
CISPR 22:1993 / EN 55022:1994 Class A[3)]
EN 50081-1:1992
EN 50082-1:1992

IEC 801-2:1991 / prEN 55024-2:1992 -	4 kV CD, 8 kV AD
IEC 801-3:1984 / prEN 55024-3:1991 -	3 V/m
IEC 801-4:1988 / prEN 55024-4:1992 -	1.0 kV Power Lines 0.5 kV Signal Lines

FCC Title 47 CFR, Part 15 Class B[2] / ICES-002, Issue 2
AS / NZS 3548:1995

Supplementary Information:
The product herewith complies with the requirements of the EMC Directive 89/336/EEC and the Low Voltage Directive 73/23/EEC, and carries the CE-Marking accordingly.

1) The product was tested in a typical configuration with Hewlett-Packard Personal Computer Systems.
2) This Device complies with part 15 of the FCC Rules. Operation is subject to the following two conditions: (1) this device may not cause harmful interference, and (2) this device must accept any interference received, including interference that may cause undesired operation.
3) The product includes LAN (Local Area Network) options. When the interface cable is attached to either of the IEEE 802.3 connectors, the product meets the requirements of EN55022 Class A.

Boise, Idaho USA
May 19, 1998

Australia Contact: Product Regulations Manager, Hewlett-Packard Australia Ltd., 31-41 Joseph Street, Blackburn, Victoria 3130, Australia.

European Contact: Your Local Hewlett-Packard Sales and Service Office or Hewlett-Packard GmbH, Department HQ-TRE, Herrenberger Straáe 130, D-71034 B™blingen (FAX: +49-7031-14-3143).
USA Contact: Product Regulations Manager, Hewlett-Packard Company, PO Box 15, Mail Stop 160, Boise, ID, 83707-0015 (Phone: 208-396-6000).

Download Service Manual And Resetter Printer at http://printer1.blogspot.com

Safety Statements

Laser Safety Statement

The Center for Devices and Radiological Health (CDRH) of the U.S. Food and Drug Administration has implemented regulations for laser products manufactured since August 1, 1976. Compliance is mandatory for products marketed in the United States. The printer is certified as a “Class 1” laser product under the U.S. Department of Health and Human Services (DHHS) Radiation Performance Standard according to the Radiation Control for Health and Safety Act of 1968. Since radiation emitted inside the printer is completely confined within protective housings and external covers, the laser beam cannot escape during any phase of normal user operation.

WARNING! Using controls, making adjustments, or performing procedures other than those specified in this user’s guide may result in exposure to hazardous radiation.

Canadian DOC Regulations

Complies with Canadian EMC Class B requirements.

<<Conforme á la classe B des normes canadiennes de compatibilité électromagnétiques. << CEM>>.>>

VCCI Statement (Japan)

この装置は、情報処理装置等電波障害自主規制協議会（ＶＣＣＩ）の基準に基づく第二種情報技術装置です。この装置は、家庭環境で使用することを目的としていますが、この装置がラジオやテレビジョン受信機に近接して使用されると、受信障害を引き起こすことがあります。
取り扱い説明書に従って正しい取り扱いをして下さい。

Download Service Manual And Resetter Printer at http://printer1.blogspot.com

Korean EMI statement

사용자 안내문(B급 기기)

이 기기는 비업무용으로 전자파장해검정을 받은 기기로서, 주거지역에서는 물론 모든 지역에서 사용할 수 있습니다.

Laser Statement for Finland

LASERTURVALLISUUS

LUOKAN 1 LASERLAITE

KLASS 1 LASER APPARAT

HP LaserJet 8100, 8100 N, 8100 DN -laserkirjoitin on käyttäjän kannalta turvallinen luokan 1 laserlaite. Normaalissa käytössä kirjoittimen suojakotelointi estää lasersäteen pääsyn laitteen ulkopuolelle.

Laitteen turvallisuusluokka on määritetty standardin EN 60825-1 (1993) mukaisesti.

VAROITUS !

Laitteen käyttäminen muulla kuin käyttöohjeessa mainitulla tavalla saattaa altistaa käyttäjän turvallisuusluokan 1 ylittävälle näkymättömälle lasersäteilylle.

VARNING !

Om apparaten används på annat sätt än i bruksanvisning specificerats, kan användaren utsättas för osynlig laserstrålning, som överskrider gränsen för laserklass 1.

HUOLTO

HP LaserJet 8100, 8100 N, 8100 DN -kirjoittimen sisällä ei ole käyttäjän huollettavissa olevia kohteita. Laitteen saa avata ja huoltaa ainoastaan sen huoltamiseen koulutettu henkilö. Tällaiseksi huoltotoimenpiteeksi ei katsota väriainekasetin vaihtamista, paperiradan puhdistusta tai muita käyttäjän käsikirjassa lueteltuja, käyttäjän tehtäväksi tarkoitettuja ylläpitotoimia, jotka voidaan suorittaa ilman erikoistyökaluja.

Download Service Manual And Resetter Printer at http://printer1.blogspot.com

VARO !

Mikäli kirjoittimen suojakotelo avataan, olet alttiina näkymättömälle lasersäteilylle laitteen ollessa toiminnassa. Älä katso säteeseen.

VARNING !

Om laserprinterns skyddshölje öppnas då apparaten är i funktion, utsättas användaren för osynlig laserstrålning. Betrakta ej strålen.

Tiedot laitteessa käytettävän laserdiodin säteilyominaisuuksista:

Aallonpituus 770-795 nm

Teho 5 mW

Luokan 3B laser

Download Service Manual And Resetter Printer at http://printer1.blogspot.com

Download Service Manual And Resetter Printer at http://printer1.blogspot.com

2 Site Requirements

Chapter Contents

Operating Environment - 44
Space Requirements - 45
Environmental Requirements - - - - - - - - - - - - - - - - - - 47

Download Service Manual And Resetter Printer at http://printer1.blogspot.com

Operating Environment

The electrical specifications listed in Chapter 1 must be maintained to ensure proper operation of this printer. Consider the following points before installing the printer.

- Install the printer in a well-ventilated, dust-free area, away from any open windows.
- Install the printer on a hard, flat and continuous surface, with all four printer feet level. Do not install on carpet or other soft surfaces.
- Ensure adequate, stable power is supplied. Printer power requirements are listed in table 1-6, “Electrical Specifications,” on page 9.
- Install the printer where there is stable temperature and humidity, away from water sources, humidifiers, air conditioners, refrigerators, or other major appliances (see table 2-1 on page 47).
- Install the printer away from direct sunlight, open flames, or ammonia fumes. If the printer is placed near a window, make sure the window is closed and has a curtain or blind to block any direct sunlight.
- Install the printer with enough space around the printer for proper access and ventilation (see figure 2-1 on page 45).
- Install the printer away from the direct flow of exhaust from air ventilation, heating, or air conditioning systems.

Download Service Manual And Resetter Printer at http://printer1.blogspot.com

Space Requirements

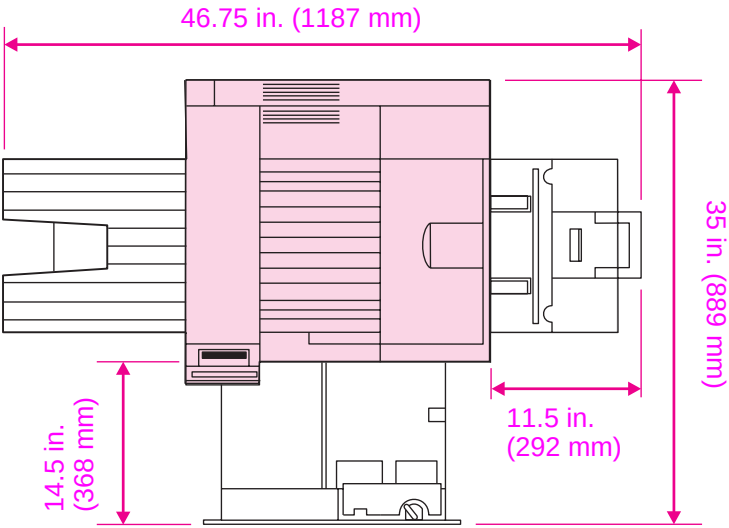

Figure 2-1 **Printer Space Requirements (Top view)**

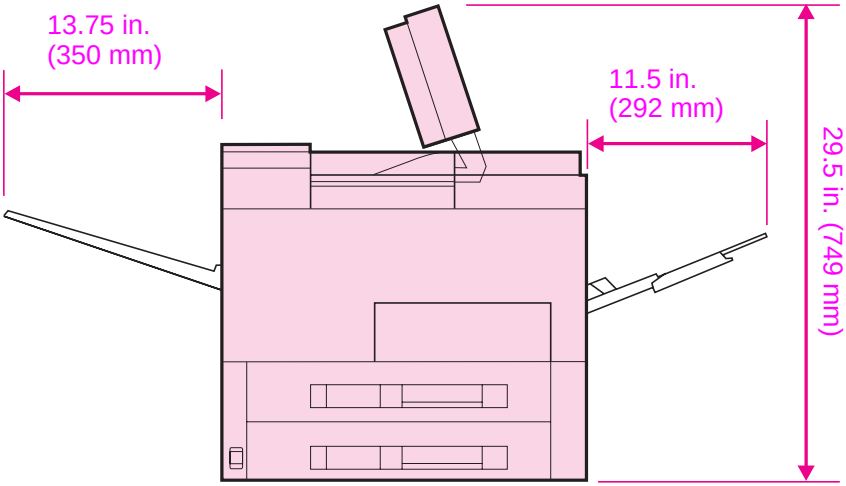

Figure 2-2 **Printer Space Requirements (Side view)**

Download Service Manual And Resetter Printer at http://printer1.blogspot.com

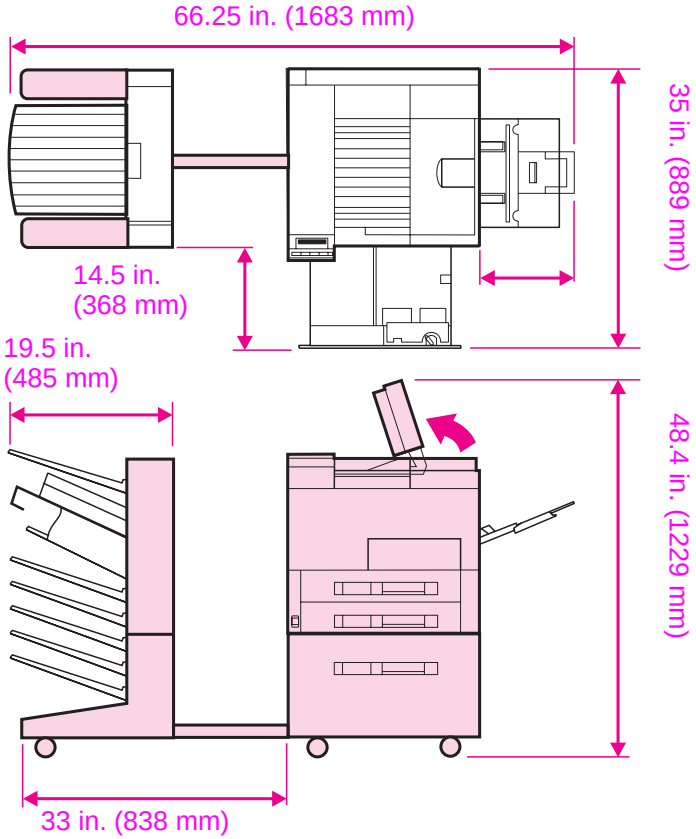

Figure 2-3 **Printer Space Requirements (with Mailbox and Input Device)**

Download Service Manual And Resetter Printer at http://printer1.blogspot.com

Environmental Requirements

Keep the printer within the following environmental conditions for optimum performance.

Table 2-1. Printer and Toner Cartridge Environmental Conditions

	Operating	Storage
Temperature	10° to 32.5° C (50° to 90.5° F)	0° to 40° C (32° to 105° F)
Humidity	20 to 80% RH (with no condensation)	15 to 90% RH (with no condensation)

For printer weights, see table 1-4, “Dimensions of Printer and Paper-handling Devices,” on page 7.

Download Service Manual And Resetter Printer at http://printer1.blogspot.com

Download Service Manual And Resetter Printer at http://printer1.blogspot.com

3 Operating Overview

Chapter Contents

Using the Control Panel - 50
Performing a Cold Reset - 54
Control Panel Menus - 57
Service Mode - 77
Testing the Printer - 81

Download Service Manual And Resetter Printer at http://printer1.blogspot.com

Using the Control Panel

Control Panel Layout

The control panel contains a 2-line, 16-character-per-line display panel, six keys, and three indicator lights.

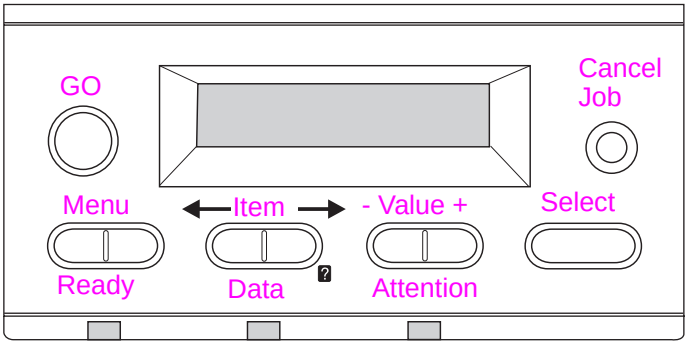

Figure 3-1 **Control Panel Layout**

Table 3-1. Control Panel Keys

Key	Function
GO	Places the printer either online or offline. Prints any data residing in the printer's buffer. Allows the printer to resume printing after being offline. Clears most printer messages and places the printer online. Allows the printer to continue printing with an error message such as `TRAY x LOAD [TYPE] [SIZE]` or `UNEXPECTED PAPER SIZE`. Confirms a manual feed request if Tray 1 is loaded and `TRAY 1 MODE= CASSETTE` has been set from the Paper Handling Menu in the printer's control panel. Overrides a manual feed request from Tray 1 by selecting paper from the next available tray. Exits the control panel menus. (To save a selected control panel setting, first press SELECT.)
MENU	Cycles through the control panel menus. Press the right end of the button to move forward or the left end of the button to move backward.

Download Service Manual And Resetter Printer at http://printer1.blogspot.com

Table 3-1. Control Panel Keys (continued)

Key	Function
ITEM	Cycles through the selected menu's items. Press the right end of the button to move forward or the left end of the button to move backward. Menu items that appear depend on the options installed and the configuration of other menu choices.
<ITEM>?	Provides an on-line help tool with more details on display error messages. Cycles through the selected menu item's values. Press + to move forward or - to move backward.
-VALUE+	Cycles through the selected menu item's values. Press + to move forward or - to move backward.
SELECT	Saves the selected value for that item. An asterisk (*) appears next to the selection, indicating that it is the new default. Default settings remain when the printer is switched off or reset (unless you reset all factory defaults from the Resets Menu). Prints one of the printer information pages from the control panel.
CANCEL JOB	Cancels the print job that the printer is processing. The time it takes to cancel depends on the size of the print job. (Press it only once.)

Indicator Lights

The control panel indicator lights are described in the following table.

Table 3-2. Indicator Lights

Indicator=	State	Explanation	Action
Ready	On	Ready to receive data.	No action required.
	Flashing	Going offline.	No action required.
	Off	Printer is offline.	Press GO to place printer online.
Data	On	Data is resident in the printer and processed as far as possible. More data is expected, but no activity on the channel at this time.	No action required.
	Flashing	Data is being received or processed.	No action required.
	Off	No data is being received or processed in the printer.	No action required.

Download Service Manual And Resetter Printer at http://printer1.blogspot.com

Table 3-2. Indicator Lights (continued)

Indicator=	State	Explanation	Action
Attention	On	Catastrophic error. Printer system is halted.	Turn printer off, then on. If problem persists, see Chapter 7.
	Flashing	The printer needs attention.	Read and respond to display panel message.
	Off	There are no messages or error conditions requiring attention.	No action required.

Settings and Defaults

The printer makes most printing decisions based on either temporary settings or factory (permanent) defaults.

Note Settings you send from software applications override printer defaults.

Temporary Settings are the values set for the current print job by your software application. Temporary settings remain in effect until the current print job is finished.

Control Panel Defaults are the values entered by selecting a control panel item and pressing SELECT. An asterisk (*) next to the item name indicates that it is now the default. The printer retains default settings even when power is turned off.

Factory Defaults are the permanent default values for each menu item set at the factory. These values are listed in table 3-3 on page 55.

Printer Driver Information

When you change a setting from the printer control panel, the new setting becomes the printer default value. You can override any Printing Menu setting through most software applications and from the printer driver.

Download Service Manual And Resetter Printer at http://printer1.blogspot.com

Paper Source Default

The printer paper source is specified by the print job, not the printer control panel. The following paragraphs apply when the current job does not specify a paper source. Unless changed or not specified by the current job, the software application, or the printer driver, the paper source default is determined by the “Cold Reset Paper Size” (letter or A4) set in the Service Mode Menu.

- If Tray 1 is set to cassette, it will look for the default size.
- If there is no paper in Tray 1, and Tray 4 of the 2000-sheet Input Tray is installed and loaded with the Cold Reset Paper Size, the printer will pull from Tray 4.
- The printer pulls paper from Tray 5 first if the Optional 2 x 500-sheet Input Tray is installed.
- If there is no paper in Tray 1, and Tray 4 is not installed, the printer will pull from the first tray containing the Cold Reset Paper Size.
- If none of the trays contain the Cold Reset Paper Size, the printer will prompt the user to put letter or A4 paper in Tray 1.

Download Service Manual And Resetter Printer at http://printer1.blogspot.com

Performing a Cold Reset

Cold Reset

Cold Reset clears all data from the printer memory and sets all the defaults back to the factory settings.

CAUTION Performing a Cold Reset resets the JetDirect configuration. To avoid making changes to your configuration, remove the JetDirect card before performing a Cold Reset.

If possible, print a Configuration Page prior to performing a Cold Reset. This will document current settings for later reference.

To perform a Cold Reset:

1. Turn off the printer.
2. While pressing GO, turn the printer on. COLD RESET appears briefly on the display, then INITIALIZING appears. After a few seconds, RESTORING FACTORY SETTINGS appears on the display, followed by OFFLINE. The Cold Reset is complete.
3. Press GO to return the printer online. READY appears on the display.

Setting the Display Language

1. Press and hold SELECT while powering on. Hold SELECT until SELECT LANGUAGE appears.
2. Release SELECT. INITIALIZING appears briefly. Wait for LANGUAGE=ENGLISH to appear.
3. Press + repeatedly until the desired language appears.
4. Press SELECT to save your choice. An asterisk (*) will appear beside your language selection.
5. Press GO to return to a READY state.

Download Service Manual And Resetter Printer at http://printer1.blogspot.com

Table 3-3. Factory Default Settings

APPEND CR TO LF	NO
AUTO CONTINUE=	ON
CFG NETWORK	NO
CLEARABLE WARNINGS	JOB
CONFIGURE CUSTOM PAPER	NO
CONFIGURE FUSER MODE	NO
COPIES	1
COURIER	REGULAR
CREATE CLEANING PAGE	NO
DUPLEX=	OFF
ECONOMODE=	OFF
FORM	60 LINES
I/O TIMEOUT=	15 SECONDS
IO BUFFER=	AUTO
JAM RECOVERY=	AUTO
MANUAL FEED	OFF
NEW TONER CARTRIDGE	NO
ORIENTATION=	PORTRAIT
OVERRIDE A4/LETTER	NO
PAPER DEST=	STANDARD OUTPUT BIN
PAPER=	LETTER
PARALLEL ADV FUNCTIONS	ON
PARALLEL HIGH SPEED SETTING=	YES
PCL FONT NUMBER	0
PCL FONT PITCH	10
PCL FONT SOURCE	INTERNAL
PCL SYMBOL SET	PC-8
PERSONALITY=	AUTO
POWERSAVE ON=	1 HOUR

Download Service Manual And Resetter Printer at http://printer1.blogspot.com

Table 3-3. Factory Default Settings (continued)

PRINT PS ERRORS	OFF
RAM DISK	AUTO
RAM DISK SIZE	800K
RESOLUTION=	FASTRES 1200
RESOURCE SAVE=	OFF
RET=	MEDIUM
TONER DENSITY=	3
TONER LOW=	CONTINUE
TRAY 1 MODE	FIRST
TRAY 2 TYPE	PLAIN
TRAY 3 TYPE	PLAIN
WIDE A4	NO

Download Service Manual And Resetter Printer at http://printer1.blogspot.com

Control Panel Menus

Press MENU to cycle through the control panel menus. Each menu is described in a separate table in this section. Figure 3-3 (see page 83) provides a map of all the menus and their associated items. Menu items are displayed only if their associated option is installed, or their function is activated.

All menus and their associated items are accessible when the printer is online. In menu mode, if no keys are pressed for approximately 30 seconds, the system will automatically return to the top level and display either an existing error, or one of the following:

- READY, if the printer was online.
- OFFLINE, if the printer was offline.

To select a menu item

1. Press MENU repeatedly until the desired menu appears.
2. Press ITEM repeatedly until the desired item appears.
3. Press + repeatedly (or hold down + to scroll) until the desired setting appears.
4. Press SELECT to save the selection. An asterisk (*) appears next to the selection, indicating that it is now the default.
5. Press MENU or GO to exit the menus.

Note Shaded items appear only if the associated option or function is installed and activated.

Download Service Manual And Resetter Printer at http://printer1.blogspot.com

Quick Copy Jobs Menu

This menu provides a list of the quick copy jobs stored on the printer's hard disk. The user can print or delete these jobs from the control panel.

Note If there are no quick copy jobs stored on the printer's hard disk, this menu is not displayed on the control panel.

Table 3-4. Information Menu

Item	Value	Explanation
[USERNAME]		The name of the person who owns the quick copy job.
COPIES=1	1 to 999 DELETE	The number of additional copies the user wants to print. 1-999: Prints the requested number of copies of the job. DELETE: Deletes the job from the printer's hard disk.

Private/Stored Jobs Menu

This menu provides a list of the private and stored jobs on the printer's hard disk. The user can print or delete these jobs from the control panel.

Note If there are no private and stored jobs on the printer's hard disk, this menu is not displayed on the control panel.

Table 3-5. Information Menu

Item	Value	Explanation
[JOBNAME]		The name of the job stored on the printer's hard disk.
PIN:0000		To print the job, the user must enter the Personal Identification Number (PIN) assigned to the job in the driver.
COPIES=1	1 to 999 DELETE	The number of additional copies the user wants to print. 1-999: Prints the requested number of copies of the job. DELETE: Deletes the job from the printer's hard disk.

Note The Quick Copy Jobs Menu and the Private/Stored Jobs Menu will only appear if you have a Hard Disk, if you have selected a Job Retention Option, and if you have sent jobs to the printer.

Download Service Manual And Resetter Printer at http://printer1.blogspot.com

Information Menu

This menu contains printer information pages that give details about the printer and its configuration. To print a page from the information menu, scroll to the desired page and press SELECT.

Table 3-6. Information Menu

Item	Explanation
PRINT MENU MAP	The menu map shows the layout and current settings of the control panel menu items.
PRINT CONFIGURATION	The configuration page shows the printer's current configuration. If an HP JetDirect print server card is installed (HP LaserJet 8100 N, and 8100 DN printers), a JetDirect configuration page will print out as well.
PRINT PCL FONT LIST	The PCL font list shows all the PCL fonts currently available to the printer.
PRINT PS FONT LIST	The PS font list shows all the PS fonts currently available to the printer.
PRINT FILE DIRECTORY	The file directory shows information for all of the installed mass storage devices.
PRINT EVENT LOG	The event log lists printer events or errors.
SHOW EVENT LOG	This item allows you to view the most recent printer events on the control panel display. Press - VALUE + to scroll through the event log entries.
PRINT PAPER PATH TEST	The paper path test can be used to verify that the paper path is working properly, or to troubleshoot problems with a type of paper. Choose the input tray, output bin, duplexer (if available), and number of copies. **NOTE: Feeding paper from Tray 1 will not allow the user to send paper to the Face-down output bins during this test.**
PRINT USAGE PAGE	Only shown when hard disk is installed. Primarily used for Mopier page tracking.

Download Service Manual And Resetter Printer at http://printer1.blogspot.com

Paper Handling Menu

When paper handling settings are correctly configured through the control panel, you can print by choosing the type and size of paper from the printer driver or software application.

Some items in this menu (such as duplex and manual feed) can be accessed from a software application, or from the printer driver (if the appropriate driver is installed). Printer driver and software application settings override control panel settings.

Table 3-7. Paper Handling Menu

Item	Values	Explanation
TRAY 1 MODE= FIRST	FIRST CASSETTE	Determine how the printer will use Tray 1. FIRST: If paper is loaded in Tray 1, the printer will pull paper from that tray first. CASSETTE: A paper size must be assigned to Tray 1 using the TRAY 1 SIZE option (the next item in this menu when TRAY 1 MODE=CASSETTE). This allows Tray 1 to be used as a reserved tray.
TRAY 2 TYPE= PLAIN	For supported paper types, see table 1-3.	Set the value to correspond with the paper type currently loaded in Tray 2.
TRAY 3 TYPE= PLAIN	For supported paper types, see table 1-3.	Set the value to correspond with the paper type currently loaded in Tray 3.
*TRAY 4 TYPE= PLAIN	For supported paper types, see table 1-3.	Set the value to correspond with the paper type currently loaded in the Optional 2000-sheet Input Tray (Tray 4) or Tray 4 of the Optional 2 x 500-sheet Input Tray (Trays 4 and 5).
*TRAY 5 TYPE= PLAIN	For supported paper types, see table 1-3.	Set the value to correspond with the paper type currently loaded in Tray 5 of the Optional 2 x 500-sheet Input Tray (Trays 4 and 5).
PAPER DEST= STANDARD OUTBIN	STANDARD OUTBIN LEFT OUTBIN OPTIONAL BIN	This item appears when an output device is installed. Set the value to correspond to the appropriate bin. Additional output bins appear in the menu with the installation of output devices.
MANUAL FEED=OFF	OFF ON	Feed the paper manually from Tray 1, rather than automatically from a tray. When MANUAL FEED=ON and Tray 1 is empty, the printer goes offline when it receives a print job and displays MANUALLY FEED [PAPER SIZE].

Download Service Manual And Resetter Printer at http://printer1.blogspot.com

Table 3-7. Paper Handling Menu (continued)

Item	Values	Explanation
*DUPLEX=OFF	OFF ON	This item appears only when a duplexer is installed. Set the value to ON to print on both sides (duplex) or OFF to print on one side (simplex) of a sheet of paper.
OVERRIDE A4/LETTER=NO	NO YES	Choose YES to print on letter-size paper when an A4 job is sent, but no A4-size paper is loaded in the printer (or to print on A4-size paper when a letter job is sent, but no letter paper is loaded in the printer).
CONFIGURE FUSER MENU	NO YES	Default is NO. Choose YES to configure.Press - VALUE + or to make your selection, and press SELECT to save the setting. NORMAL = 32 ppm LOW = slightly lower temperature at 32 ppm HIGH1 = slightly higher than normal at 32 ppm HIGH2 = slightly higher than normal at 24 ppm. This allows more time to fuse toner for special types of media (i.e. heavy, rough stock) HIGH3 = slightly hotter fusing than H1 or H2 at 16 ppm, for media needing more time in the fusing process.

Note

Items marked with an * only appear in the menu if the 2 x 500-sheet Input Tray, the 2000-sheet Input Tray, or the duplexer are installed.

To see the default fuser mode for each paper type, select YES, scroll back to the Information Menu, and print a menu map.

Download Service Manual And Resetter Printer at http://printer1.blogspot.com

Print Quality Menu

Some items in this menu can be accessed from a software application, or from the printer driver (if the appropriate driver is installed). Printer driver and software application settings override control panel settings.

Table 3-8. Print Quality Menu

Item	Values	Explanation
RESOLUTION= FASTRES 1200	300 600 FASTRES 1200	Select the resolution from the following values: 300**:** Produces draft print quality at the printer's maximum speed (32 ppm). 300 dpi (dots per inch) is recommended for some bitmapped fonts and graphics, and for compatibility with the HP LaserJet III family of printers. 600**:** Produces high print quality at the printer's maximum speed. FASTRES 1200**:** Produces optimum print quality (comparable to 1200 dpi) at the printer's maximum speed. **Note** It is best to change the resolution from the printer driver or software application. (Driver and software settings override control panel settings.)
RET=MEDIUM	OFF LIGHT MEDIUM DARK	Use the printer's Resolution Enhancement technology (REt) setting to produce print with smooth angles, curves, and edges. All print resolutions, including FastRes 1200, benefit from REt. **Note** It is best to change the REt setting from the printer driver or software application. (Driver and software settings override control panel settings.)

Download Service Manual And Resetter Printer at http://printer1.blogspot.com

Table 3-8. Print Quality Menu (continued)

Item	Values	Explanation
ECONOMODE=OFF	OFF ON	Turn EconoMode on (for draft mode) or off (for high quality). EconoMode creates draft-quality printing by reducing the amount of toner on the printed page by up to 50%. **CAUTION** HP does not recommend full-time use of EconoMode. (If EconoMode is used full-time, it is possible that the toner supply will outlast the mechanical parts in the toner cartridge.) **Note** It is best to turn EconoMode on or off from the printer driver or software application. (Driver and software settings override control panel settings.)
TONER DENSITY=3	1 2 3 4 5	Lighten or darken the print on the page by changing the toner density setting. The settings range from 1 (light) to 5 (dark), but the default setting of 3 usually produces the best results. Use a lower toner density setting to save toner. **Note** It is best to change the toner density from the printer driver or software application. (Driver and software settings override control panel settings.)
CREATE CLEANING PAGE	No value to select.	Press SELECT to print a cleaning page (for cleaning excess toner from the paper path). In order for the cleaning page to work properly, print the page on copier grade paper (not bond or rough paper). Follow the instructions on the cleaning page.

Download Service Manual And Resetter Printer at http://printer1.blogspot.com

Printing Menu

Some items in this menu can be accessed from a software application, or from the printer driver (if the appropriate driver is installed). Printer driver and software application settings override control panel settings.

Table 3-9. Printing Menu

Item	Values	Explanation
COPIES=1	1 to 999	Sets the default number of copies by selecting any number from 1 to 999. Press - VALUE + once to change the setting by increments of 1, or hold down - VALUE + to scroll by increments of 10. **Note** It is best to set the number of copies from the printer driver or software application. (Driver and software settings override control panel settings.)
PAPER= LETTER	For supported paper types, see table 1-3.	Sets the default image size for paper and envelopes. (The item name will change from paper to envelope as you scroll through the available sizes.) **Note** The defaults indicated here are for 110V printers. The default paper size for 220V printers is A4. The default envelope size for 220V printers is DL.
CONFIGURE CUSTOM PAPER=NO	NO YES	NO: The custom paper menu items are not accessible. YES: This menu item allows the user to configure a custom size when printing from Tray 1. The increments can be set to inches or millimeters.
FORM=60 LINES	5 to 128	Sets vertical spacing from 5 to 128 lines for default paper size. Press - VALUE + once to change the setting by increments of 1, or hold down - VALUE + to scroll by increments of 10.
ORIENTATION=	PORTRAIT LANDSCAPE	Determines the default orientation of print on the page. **Note** It is best to set the page orientation from the printer driver or software application. (Driver and software settings override control panel settings.)

Download Service Manual And Resetter Printer at http://printer1.blogspot.com

Table 3-9. Printing Menu (continued)

Item	Values	Explanation
PCL FONT SOURCE=INTERNAL	INTERNAL SOFT SLOT 1, 2, or 3	INTERNAL: Internal fonts. SOFT: Permanent soft fonts. SLOT 1, 2, or 3: Fonts stored in one of the three DIMM slots.
PCL FONT NUMBER= 0	0 to 999	The printer assigns a number to each font and lists them on the PCL Font List. The font number appears in the Font # column of the printout.
PCL FONT PITCH= 10.00	0.44 to 99.99	This item might not appear, depending on the font selected. Press - VALUE + once to change setting by increments of 0.01 for pitch, or hold down - VALUE + to scroll by increments of 1.
PCL SYMBOL SET=PC-8	PC-8 many others	Select any one of several available symbol sets from the printer's control panel. A symbol set is a unique grouping of all the characters in a font. PC-8 or PC-850 is recommended for line draw characters.
COURIER=REGULAR	REGULAR DARK	Select the version of Courier font to use: REGULAR: The internal Courier font available on the HP LaserJet 4 series printers. DARK: The internal Courier font available on the HP LaserJet III series printers. Both fonts are not available at the same time.
WIDE A4=NO	NO YES	The Wide A4 setting changes the number of characters that can be printed on a single line of A4 paper. NO: Up to 78 10-pitch characters can be printed on one line. YES: Up to 80 10-pitch characters can be printed on one line.
APPEND CR TO LF= NO	NO YES	Select YES to append a carriage return to each line feed encountered in backward-compatible PCL jobs (pure text, no job control). Some environments, such as UNIX, indicate a new line using only the line feed control code. This option allows the user to append the required carriage return to each line feed.

Download Service Manual And Resetter Printer at http://printer1.blogspot.com

Table 3-9. Printing Menu (continued)

Item	Values	Explanation
PRINT PS ERRORS=OFF	OFF ON	Select ON to print the PS error page when PS errors occur.

Download Service Manual And Resetter Printer at http://printer1.blogspot.com

Configuration Menu

Items in this menu affect the printer's behavior. Configure the printer according to your printing needs.

Table 3-10. Configuration Menu

Item	Values	Explanation
POWERSAVE ON= 1 HOUR	OFF 15 MINUTES 30 MINUTES 1 HOUR 2 HOURS 3 HOURS	Set the printer to enter PowerSave after it has been idle for a specified amount of time. Turning PowerSave off is not recommended. The PowerSave feature does the following: Minimizes the amount of power consumed by the printer when it is idle. Reduces wear on the printer's electronic components. (Turns off the display's backlight.) When you send a print job, press a control panel key, open a paper tray, or open the top cover, the printer automatically comes out of PowerSave mode. **Note** PowerSave turns off the backlight on the display, but the display is still readable.
PERSONALITY= AUTO	AUTO PCL PS	Select the default printer language (personality). Normally you should not change the printer language (the default is AUTO). If you change it to a specific printer language, the printer will not automatically switch from one language to another unless specific software commands are sent to the printer.

Download Service Manual And Resetter Printer at http://printer1.blogspot.com

Table 3-10. Configuration Menu (continued)

Item	Values	Explanation
RESOURCE SAVE= OFF	OFF ON AUTO	This item dedicates printer memory to save each language's permanent resources. (You might need to add memory to the printer in order for this item to appear.) The amount of memory set aside can be different for each installed language. Some languages might have memory set aside for resource saving without requiring all languages to do so. Any time the amount of memory dedicated to a specific language is changed, all languages will lose all saved resources, including any unprocessed print jobs. OFF**:** No language resource saving is performed, and language-dependent resources, such as fonts and macros, are lost when language or resolution changes. ON**:** An item will appear for each installed language that allows the user to allocate a particular amount of memory to that language's resource saving area. (See the items below.) AUTO**:** The printer automatically determines the amount of memory to use for each installed language's resource saving area.
PCL MEMORY+ 400K	0K and up (This value depends on the amount of installed memory.)	This item appears only when RESOURCE SAVE=ON. Select the amount of memory used for saving PCL resources. Printer default is the minimum amount of memory needed to perform resource saving for PCL. Press - VALUE + to change settings by increments of 10 (up to 100KB) or by increments of 100 (above 100KB).
PS MEMORY= 400K	0K and up (This value depends on the amount of installed memory.)	This item appears only when RESOURCE SAVE=ON. Select the amount of memory used for saving PS resources. Printer default is the minimum amount of memory needed to perform resource saving for PCL. Press - VALUE + to change settings by increments of 10 (up to 100KB) or by increments of 100 (above 100KB).

Download Service Manual And Resetter Printer at http://printer1.blogspot.com

Table 3-10. Configuration Menu (continued)

Item	Values	Explanation
PAGE PROTECT= AUTO	AUTO ON	This item appears only after a 21 PAGE TOO COMPLEX, PRESS GO TO CONTINUE message displays. Memory Enhancement technology (MEt) attempts to guarantee that all pages will print. If the page does not print, turn PAGE PROTECT to ON. This might increase chances of a 20 INSUFFICIENT MEMORY, PRESS GO TO OONTINUE message. If this occurs, simplify the print job or install additional memory.
CLEARABLE WARNINGS=JOB	JOB ON	Set the amount of time that a clearable warning is displayed on the printer's control panel. JOB: Warning messages display on the control panel until the end of the job from which they were generated. ON: Warning messages display on the control panel until Go is pressed.
AUTO CONTINUE= ON	ON OFF	This item determines how the printer reacts to errors. ON: If an error occurs that prevents printing, the message will display, and the printer will go offline for 10 seconds before returning online. OFF: If an error occurs that prevents printing, the message will remain on the display and the printer will remain offline until Go is pressed.
TONER LOW=CONTINUE	CONTINUE STOP	This item determines how the printer behaves when toner is low. The TONER LOW message will first appear when the toner cartridge is almost out of toner. (About 100 to 300 images can still be printed.) CONTINUE: The printer will continue to print while the TONER LOW message is displayed. STOP: The printer will go offline and wait for further action.

Download Service Manual And Resetter Printer at http://printer1.blogspot.com

Table 3-10. Configuration Menu (continued)

Item	Values	Explanation
RAM DISK=AUTO	ON OFF AUTO	This item determines how the RAM disk is configured. This item appears only if there is no optional hard disk installed and the printer has at least 12 MB of memory. OFF: The RAM disk is disabled. ON: The RAM disk is enabled. Configure the amount of memory to be used with the item RAM DISK SIZE. **Note** If the setting is changed from OFF to ON or from OFF to AUTO, the printer will automatically reinitialize when it becomes idle.
RAM DISK SIZE=xxxK	0K and up. (This value depends on the amount of installed memory.)	This item determines the size of the RAM disk. This item appears if RAM DISK=ON or AUTO. Press - VALUE + to change settings by increments of 100. **Note** This setting cannot be changed if RAM DISK=AUTO. Changing this value will cause the printer to reinitialize when it becomes idle.
JAM RECOVERY= AUTO	AUTO ON OFF	This item determines how the printer behaves when a paper jam occurs. AUTO: The printer automatically selects the best mode for printer jam recovery (usually ON). This is the default setting. ON: The printer automatically reprints pages after a paper jam is cleared. OFF: The printer does not reprint pages following a paper jam. Printing performance might be increased with this setting.
MAINTENANCE MESSAGE=OFF	OFF	This item appears only after the PERFORM PRINTER MAINTENANCE message displays. OFF: The PERFORM PRINTER MAINTENANCE message will be cleared. If you do not replace the maintenance kit, the PERFORM PRINTER MAINTENANCE message will be displayed again after approximately 17,500 pages. The message should not be turned off unless the printer maintenance has been performed. If the required maintenance is not performed, the printer's performance will degrade.

Download Service Manual And Resetter Printer at http://printer1.blogspot.com

Table 3-10. Configuration Menu (continued)

Item	Values	Explanation
NEW TONER CARTRIDGE=NO	NO YES	YES: resets the printer to recognize new cartridge, and resets the toner gauge on the configuration page
QUICK COPY JOBS =32	1 to 50	Specifies the number of quick copy jobs that can be stored on the printer's hard disk.

Download Service Manual And Resetter Printer at http://printer1.blogspot.com

I/O Menu

Items in the I/O (input/output) Menu affect the communication between the printer and the computer.

Table 3-11. I/O Menu

Item	Values	Explanation
I/O TIMEOUT=15	5 to 300	Select the I/O time-out period in seconds. (I/O time-out refers to the time, measured in seconds, that the printer waits before ending a print job.) This setting allows you to adjust time-out for best performance. If data from other ports appear in the middle of your print job, increase the time-out value. Press - VALUE + once to change settings by increments of 1, or hold down - VALUE + to scroll by increments of 10.
I/O BUFFER=AUTO	AUTO ON OFF	Allocate memory for I/O buffering. AUTO: The printer automatically reserves memory for I/O buffering. Additional configurations are not required and the I/O BUFFER SIZE menu item does not appear. ON: The I/O BUFFER SIZE item appears (see below). Specify the amount of memory to be used for I/O buffering. OFF: I/O buffering is not performed and the I/O BUFFER SIZE item does not appear. When the I/O buffer setting is changed, any downloaded resources (such as fonts or macros) will need to be downloaded again, unless they are stored on an optional hard disk or flash DIMM.
PARALLEL HIGH SPEED=YES	YES NO	Select the speed at which data is transmitted to the printer. YES: The printer accepts faster parallel communications used for connections with newer computers. NO: The printer accepts slower parallel communications used for connections with older computers.

Download Service Manual And Resetter Printer at http://printer1.blogspot.com

Table 3-11. I/O Menu (continued)

Item	Values	Explanation
PARALLEL ADV FUNCTIONS=ON	ON OFF	Turn the bidirectional parallel communication on or off. The default is set for a bidirectional parallel port (IEEE-1284). This setting allows the printer to send status messages to the computer. (Turning the parallel advanced functions on might slow language switching.)

Download Service Manual And Resetter Printer at http://printer1.blogspot.com

EIO Menu

EIO (enhanced input/output) Menus depend on the particular accessory product installed in an EIO slot of the printer. If the printer contains an HP JetDirect print server EIO card, you can configure basic networking parameters using the EIO Menu. These and other parameters can also be configured through HP JetAdmin.

Table 3-12. EIO Menu

Item	Values	Explanation
CFG NETWORK=NO	NO YES	NO: The JetDirect Menu is not accessible. YES: The JetDirect Menu appears.
NOVELL=ON	ON OFF	Select whether the IPX/SPX protocol stack (in Novell NetWare networks, for example) is enabled (on) or disabled (off).
DLC/LLC=ON	ON OFF	Select whether the DLC/LLC protocol stack is enabled (on) or disabled (off).
TCP/IP=ON	ON OFF	Select whether the TCP/IP protocol stack is enabled (on) or disabled (off).
ETALK=ON	ON OFF	Select whether the Apple EtherTalk protocol stack is enabled (on) or disabled (off).
CFG IPX/SPX=NO	NO YES	NO: The IPX/SPX Menu is not accessible. YES: The IPX/SPX Menu appears. In the IPX/SPX Menu, you can specify the frame type parameter used on your network. The default is AUTO, to automatically set and limit the frame type to the one detected. For Ethernet cards, frame type selections include EN_8023, EN_II, EN_8022, EN_SNAP. For Token Ring cards, frame type selections include TR_8022, TR_SNAP. In the IPX/SPX Menu for Token Ring cards, you can also specify NetWare Source Routing parameters, which include SRC RT=AUTO (default), OFF, SINGLE R, or ALL RT.

Download Service Manual And Resetter Printer at http://printer1.blogspot.com

Table 3-12. EIO Menu (continued)

Item	Values	Explanation
CFG TCP/IP=NO	NO YES	NO: The TCP/IP Menu is not accessible. YES: The TCP/IP Menu appears. In the TCP/IP Menu, you can specify BOOTP=YES for TCP/IP parameters to be automatically loaded from a bootp or DHCP server when the printer is turned on. If you specify BOOTP=NO, you can manually set selected TCP/IP parameters from the control panel. You can manually set each byte of the IP address (IP), Subnet Mask (SM), Syslog Server (LG), and Default Gateway (GW). Also, you can manually set the Timeout time period.
CFG ETALK=NO	NO YES	NO: The EtherTalk Menu is not accessible. YES: The EtherTalk Menu appears. In the EtherTalk Menu you can set the AppleTalk phase parameter (ETALK PHASE=1 or 2) for your network.

Download Service Manual And Resetter Printer at http://printer1.blogspot.com

Resets Menu

CAUTION Use this menu with caution. You can lose buffered page data or printer configuration settings when you select these items. Only reset the printer under the following circumstances:

- You want to restore the printer's default settings.
- Communication between the printer and computer has been interrupted.
- You are having problems with a port.

The items in the Resets Menu will clear all memory in the printer, while CANCEL JOB clears only the current job.

Table 3-13. Resets Menu

Item	Explanation
RESET MEMORY	This item clears the printer buffer and the active I/O input buffer, and makes the control panel defaults current. Resetting memory during a print job can result in data loss.
RESTORE FACTORY SETTINGS	This item performs a simple reset and restores most of the factory (default) settings. This item also clears the input buffer for the active I/O. Resetting memory during a print job can result in data loss.
RESET ACTIVE I/O CHANNEL	This item performs a simple reset and clears the input and output buffers (for the active I/Os only). Resetting memory during a print job can result in data loss.
RESET ALL I/O CHANNELS	This item performs a simple reset and clears the input and output buffers for all I/Os.

Download Service Manual And Resetter Printer at http://printer1.blogspot.com

Service Mode

The Service Mode should be used only by authorized service personnel. While in Service Mode, you can:

- Verify and set the Page Count and serial number. These are displayed on the Configuration Page.
- Set the Cold Reset Paper Size Default. (This sets the factory default paper size to either Letter or A4.)
- Clear the Event Log.

Initiate the Service Mode as follows:

1. Hold down SELECT and JOB CANCEL while powering on the printer, until all lights are illuminated and the Display is blank. (If the Display Panel reads INTERNAL TEST at this point, the keys were released too soon. Repeat this step until successful.)
2. Press MENU, then SELECT. The message SERVICE MODE is displayed briefly, then the printer automatically begins an INTERNAL TEST. After several seconds, both Control Panel Indicators turn off. (The printer may display WARMING UP if it has not warmed up completely.) After the printer has warmed up and passed the self test, SERVICE MODE is displayed.
3. Press MENU once to display SERVICE MENU.

To exit the Service Mode press GO.

Table 3-14. Service Mode Menu Items

Service Mode Menu Items	Item Choices	Actions Required
PAGES=	0000000	Displays total number of pages printed by the printer. Press + to step through values above cursor. Press SELECT to activate choice. Cursor will move to next digit. Printer will set new number into NVRAM after least significant digit is selected. Pressing MENU or ITEM before completing all digits will cancel the new setting. Pressing MENU returns printer to the main menu system. Pressing ITEM moves to the next menu item.

Download Service Manual And Resetter Printer at http://printer1.blogspot.com

Table 3-14. Service Mode Menu Items (continued)

Service Mode Menu Items	Item Choices	Actions Required
MAINTENANCE COUNT=	0000000	Displays the page count when the next preventative maintenance should be performed (maintenance should be performed every 350,000 pages). Press + to step through values above cursor. Press SELECT to activate choice. Cursor will move to next digit. Printer will set new number into NVRAM after least significant digit is selected. Pressing MENU or ITEM before completing all digits will cancel the new setting. Pressing MENU returns printer to the main menu system. Pressing ITEM moves to the next menu item.
MAINTENANCE INTERVAL=	350000	Allows a service technician to change the page count when the PERFORM PRINTER MAINTENANCE 350,000 is the default value. This is provided for customers with printing environments that require more frequent maintenance cycles.
SERIAL NUMBER=	xxxxxxxxxx	Displays printer serial number (also located on the printer back cover). Press + to step through values above cursor. Press SELECT to activate choice. Cursor will move to next digit. Printer will set new number into NVRAM after least significant digit is selected. Pressing MENU or ITEM before completing all digits will cancel the new setting. Pressing MENU returns printer to the main menu system. Pressing ITEM moves to the next menu item.
COLD RESET PAPER=	LETTER * A4	Press + to change setting. Press SELECT to activate choice.
DIAGNOSTICS=	OFF * ON	For factory test purposes ONLY. DO NOT change.
CLEAR EVENT LOG		Press SELECT to activate. Printer returns to READY when completed.

Download Service Manual And Resetter Printer at http://printer1.blogspot.com

Setting Page Count, Maintenance Count, and Serial Number

The page count, maintenance count, and printer serial numbers are stored in Non-Volatile Memory. `PAGECOUNT` is the total number of images printed by the printer, `MAINTCOUNT` is the page count when the next preventative maintenance should be performed (every 350,000 images), and `SERIAL NUMBER=` is the printer serial number (also located on the printer back cover).

If it is necessary to replace the Formatter PCA, these numbers should be set to the current values to accurately reflect the age of the print engine. The procedures for setting these values are listed in table 3-14.

Before removing the old Formatter PCA, print a Configuration Page to verify the current values.

Note If it is not possible to print a Configuration Page, try to verify the values before replacing the Formatter PCA by following steps 1 through 3, below.

After verifying the page count, maintenance count, and printer serial number from the old Formatter PCA, replace it with the new PCA.

1. Enter the Service Mode as previously described in this chapter.
2. When `SERVICE MODE` is displayed, press MENU to access the Service Menu.
3. Press ITEM to display `PAGECOUNT=`, `MAINTCOUNT=`, and `SERIAL NUMBER=`.
4. Enter the appropriate values for each item.
5. Press GO to exit Service Mode.

Download Service Manual And Resetter Printer at http://printer1.blogspot.com

Setting the Cold Reset Default Paper Size

When replacing a Formatter PCA with a default paper size setting of A4, set `COLD RESET PAPER=` to A4.

1. Enter the Service Mode as previously described in this chapter.
2. Press MENU to access the Service Menu.
3. Press ITEM to step through the menu until `COLD RESET PAPER=LETTER*` is displayed.
4. Press + to toggle between Letter and A4 paper.
5. Press SELECT to activate your choice.
6. Press GO to exit Service Mode.
7. Perform a Cold Reset to activate new choice.

Download Service Manual And Resetter Printer at http://printer1.blogspot.com

Testing the Printer

Paper Path Test

You can test printer operation with the Paper Path Test. It will print 1, 10, 50,100, or 500 (single or 2-sided) pages from any of the paper trays (or the Envelope Feeder) and deliver them to a previously specified output bin.

First, select PAPER DESTINATION and 2-SIDED printing (if a duplexer is installed) in the Configuration Menu (table 3-10), and then run the Paper Path Test from the Information Menu (table 3-6).

Note If feeding from Tray 1, the default output will always be the Face-up Bin.

1. Press MENU.
2. Press (-)ITEM twice.
3. Press SELECT and continue making your desired paper path test.
4. Press SELECT to execute the test.

Configuration Page

When you print a Configuration Page, the printer checks its internal controller and I/O interface, then prints a page showing the overall printer configuration (see figure 3-2 on page 82), and a Menu Map showing the current menu settings (see figure 3-3 on page 83). You can review these printouts to verify proper installation of installed accessories, options, and personalities.

1. Press MENU until INFORMATION MENU appears.
2. Press ITEM until PRINT CONFIGURATION appears.
3. Press SELECT to print the configuration pages.

Download Service Manual And Resetter Printer at http://printer1.blogspot.com

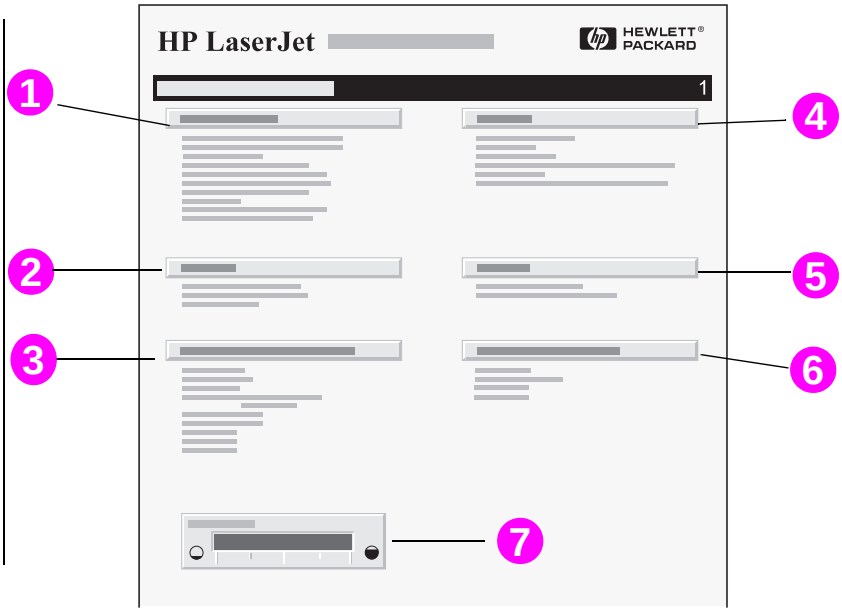

Figure 3-2 **Configuration Page (varies with installed options)**

Table 3-15. Key to Figure 3-2

1 **Printer Information** lists the serial number, HP JetSend IP addresses, page counts, and other information for the printer.

2 **Event Log** lists the number of entries in the log, the maximum number of entries viewable, and the last three entries.

3 **Installed Personalities and Options** lists all printer languages that are installed (such as PCL and PS) and lists options that are installed in each DIMM slot and EIO slot.

4 **Memory** lists the printer memory, PCL Driver Work Space (DWS), and I/O buffering and resource saving information.

5 **Security** lists the status of the printer's control panel lock, control panel password, and disk drive.

6 **Paper Tray and Options** lists the size settings for all trays and lists any optional paper handling devices installed.

7 **Toner gauge** provides a graphic representation of how much toner is left in the cartridge

Download Service Manual And Resetter Printer at http://printer1.blogspot.com

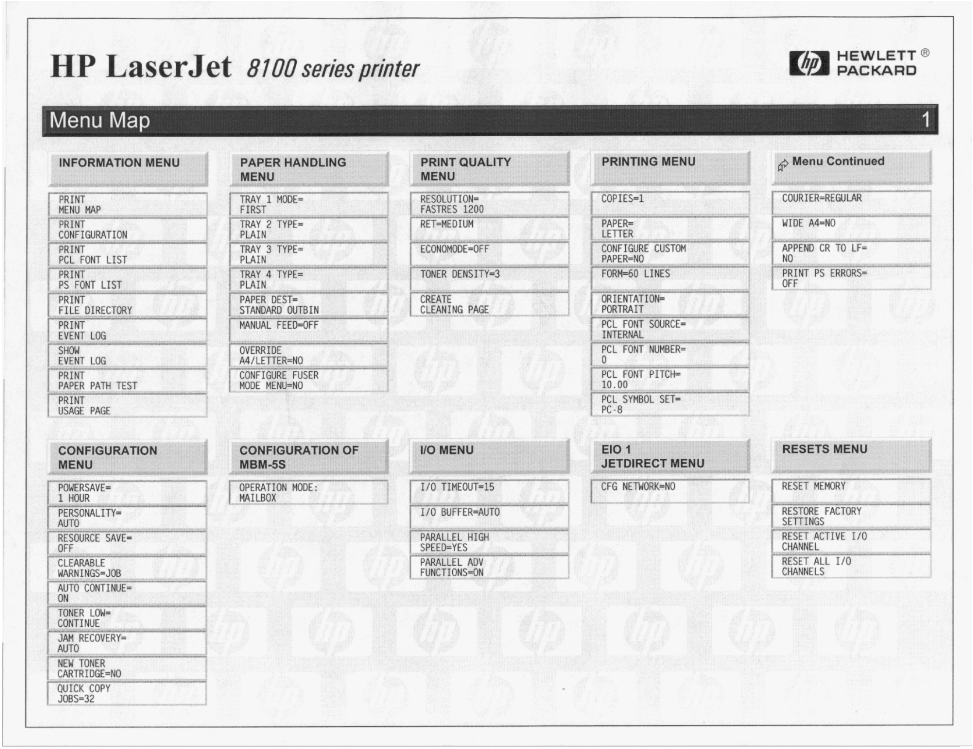

HP LaserJet *8100 series printer*

HEWLETT PACKARD

Menu Map 1

INFORMATION MENU	PAPER HANDLING MENU	PRINT QUALITY MENU	PRINTING MENU	Menu Continued
PRINT MENU MAP	TRAY 1 MODE= FIRST	RESOLUTION= FASTRES 1200	COPIES=1	COURIER=REGULAR
PRINT CONFIGURATION	TRAY 2 TYPE= PLAIN	RET=MEDIUM	PAPER= LETTER	WIDE A4=NO
PRINT PCL FONT LIST	TRAY 3 TYPE= PLAIN	ECONOMODE=OFF	CONFIGURE CUSTOM PAPER=NO	APPEND CR TO LF= NO
PRINT PS FONT LIST	TRAY 4 TYPE= PLAIN	TONER DENSITY=3	FORM=60 LINES	PRINT PS ERRORS= OFF
PRINT FILE DIRECTORY	PAPER DEST= STANDARD OUTBIN	CREATE CLEANING PAGE	ORIENTATION= PORTRAIT	
PRINT EVENT LOG	MANUAL FEED=OFF		PCL FONT SOURCE= INTERNAL	
SHOW EVENT LOG	OVERRIDE A4/LETTER=NO		PCL FONT NUMBER= 0	
PRINT PAPER PATH TEST	CONFIGURE FUSER MODE MENU=NO		PCL FONT PITCH= 10.00	
PRINT USAGE PAGE			PCL SYMBOL SET= PC-8	

CONFIGURATION MENU	CONFIGURATION OF MBM-5S	I/O MENU	EIO 1 JETDIRECT MENU	RESETS MENU
POWERSAVE= 1 HOUR	OPERATION MODE: MAILBOX	I/O TIMEOUT=15	CFG NETWORK=NO	RESET MEMORY
PERSONALITY= AUTO		I/O BUFFER=AUTO		RESTORE FACTORY SETTINGS
RESOURCE SAVE= OFF		PARALLEL HIGH SPEED=YES		RESET ACTIVE I/O CHANNEL
CLEARABLE WARNINGS=JOB		PARALLEL ADV FUNCTIONS=ON		RESET ALL I/O CHANNELS
AUTO CONTINUE= ON				
TONER LOW= CONTINUE				
JAM RECOVERY= AUTO				
NEW TONER CARTRIDGE=NO				
QUICK COPY JOBS=32				

Figure 3-3 **Menu Map Page (varies with installed options)**

Table 3-16. Key to Figure 3-3

Information Menu lets you print information pages and perform a paper path test.

Paper Handling Menu contains paper handling options.

Print Quality Menu lets you set print quality settings.

Printing Menu contains various print options.

Configuration Menu contains various printer settings.

I/O Menu contains communication settings.

Resets Menu shows options for resetting the printer.

Note Items will only appear if options are installed.

Download Service Manual And Resetter Printer at http://printer1.blogspot.com

Download Service Manual And Resetter Printer at http://printer1.blogspot.com

4 Maintenance and Adjustments

Chapter Contents

Cleaning the Printer and Accessories - - - - - - - - - - - - 86
Preventive Maintenance - - - - - - - - - - - - - - - - - - - 89
Tray Adjustment Procedure - - - - - - - - - - - - - - - - - - 90
2000-sheet Input Tray Adjustment Procedure - - - - - - - - 92

Download Service Manual And Resetter Printer at http://printer1.blogspot.com

Cleaning the Printer and Accessories

To maintain print quality and paper performance, thoroughly clean the printer and the paper handling devices:

- Every time you change the toner cartridge.
- After printing approximately 20,000 images.
- Whenever print quality problems occur.

Clean the outside surfaces with a lightly dampened cloth. Clean the inside with only a dry, lint-free cloth. Use the guidelines listed in table 4-1. Observe the warnings and cautions below.

WARNING! Before you begin these steps, turn the printer off and unplug all power cords to avoid shock hazard.

Be careful when cleaning around the Fusing Assembly area. It may be HOT.

CAUTION To avoid permanent damage to the toner cartridge, do not use ammonia-based cleaners on or around the printer.

Do not touch the transfer roller with your fingers. This can cause print quality problems.

Download Service Manual And Resetter Printer at http://printer1.blogspot.com

Cleaning the Printer

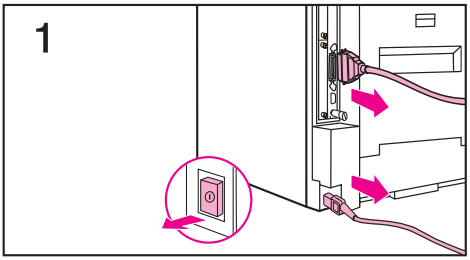

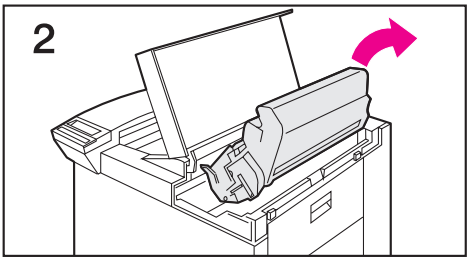

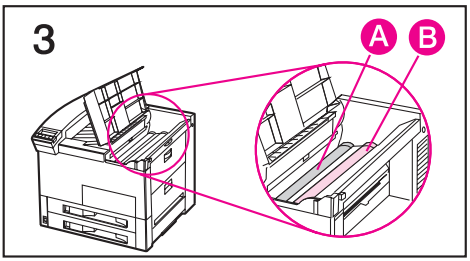

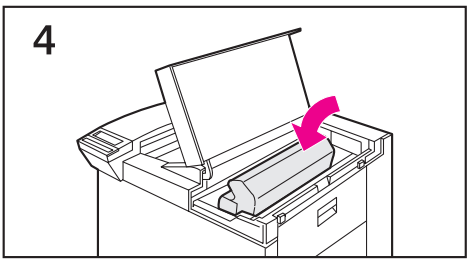

1 *Before you begin these steps*, turn the printer off and unplug all cords.

2 Open the top cover of the printer and remove the toner cartridge.

WARNING!
Avoid touching the adjacent fusing area. It may be HOT.

CAUTION
Do not touch the transfer roller (A). Oils from your hands can contaminate the roller and reduce print quality. If toner gets on your clothes, wipe it off with a dry cloth and wash your clothes in *cold* water. Hot water sets toner into fabric.

3 With a *dry* lint-free cloth, wipe any residue from the paper path area, the registration roller (B), and the toner cartridge cavity. Use the brush supplied with the printer to remove residue from tight areas.

4 Replace the toner cartridge, close the printer, reconnect all cables, and turn the printer on.

Download Service Manual And Resetter Printer at http://printer1.blogspot.com

Table 4-1. Cleaning the Printer

Component	Cleaning Method/Notes
Outside Covers	Use a water-dampened cloth. Do not use solvents or ammonia-based cleaners.
Inside General	Use a dry, lint free cloth. Remove all dust, spilled toner, and paper particles.
Paper Pickup, Feed, and Separation Rollers	Use a water-dampened lint-free cloth.
Separation Pad	Use a dry lint-free cloth.
Registration Roller	Use a dry lint-free cloth.
Transfer Roller	Use a dry, lint-free cloth. DO NOT TOUCH the transfer roller with your fingers.
Fusing Assembly	Use a water-dampened lint-free cloth.

Cleaning Spilled Toner

Defective toner cartridges can develop leaks. Also, after a paper jam has occurred, there may be some toner remaining on the rollers and guides inside the printer. The images that print immediately after the jam may pick up this toner.

Clean spilled toner with a cloth slightly dampened in cold water. Do not touch the Transfer Roller with the damp cloth or with your fingers. Do not use a vacuum cleaner unless it is equipped with a micro-fine particle filter.

Note If toner gets on your clothing, use cold water to remove it. Hot water sets toner stains into fabric.

Download Service Manual And Resetter Printer at http://printer1.blogspot.com

Preventive Maintenance

The user-conducted preventive maintenance cycle for this printer is every 350,000 images. The part numbers for the preventive maintenance kits are C3914A for the 100V printers, and C3915A for the 220V printers. The kits contain the following replacement parts: one Fusing Assembly, one Transfer Roller Assembly, and eight Feed/Separation Rollers [two each for Trays 2, 3, the 2000-sheet Input Tray (Tray 4), and the 2 x 500-sheet Input Tray (Trays 4 and 5)]. See Chapter 6 of this manual, and the instructions included in the kits for detailed replacement procedures.

The control panel message, `PERFORM PRINTER MAINTENANCE`, indicates that the 350,000 image maintenance is due. Upon completion of the maintenance procedures, go to the control panel Configuration Menu and set the `SERVICE MESSAGE=` to `OFF`.

The default (350,000) maintenance message interval can be set to lesser values if needed (50K, 150K, 250K), for printers requiring more frequent maintenance. This feature is provided for customers using heavy, rough, or generally out-of-specification media that prematurely wears out the maintenance parts.

Download Service Manual And Resetter Printer at http://printer1.blogspot.com

Tray Adjustment Procedure

This procedure applies to Trays 2 and 3 (the standard paper trays in the printer) and Trays 4 and 5 in the 2 x 500-sheet Input Tray. To adjust the 2000-sheet Input Tray see “2000-sheet Input Tray Adjustment Procedure” on page 92.

The paper trays are mechanically aligned to the printer chassis at the factory. Perform this procedure ONLY if a paper tray has been replaced with a tray other than the original factory installed tray, or if the top margin of the image area is off-center more than 0.5 mm (0.02 inch). The adjustment procedure is identical for Trays 2,3,4, and 5 from the 2 x 500-sheet Input Tray.

Note Before performing this procedure, check that the margins in your software application are properly set.

1. Load the paper tray being tested with letter or A4 size paper.
2. Perform a 1-sheet Paper Path Test from that tray (see Paper Path Test under Test Menu in Chapter 3).
3. See figure 4-1 and compare distance A to distance B.

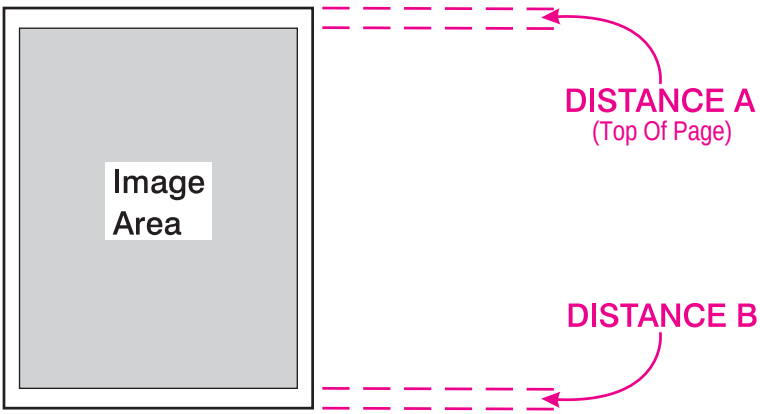

Figure 4-1 **Image Area Margins**

Download Service Manual And Resetter Printer at http://printer1.blogspot.com

Note See figure 4-2. Each adjustment notch changes the physical position of the tray by 0.5 mm (0.02 inch). Moving the lever counter-clockwise moves the tray inward and increases distance A. Moving the lever clockwise moves the tray outward and decreases distance A.

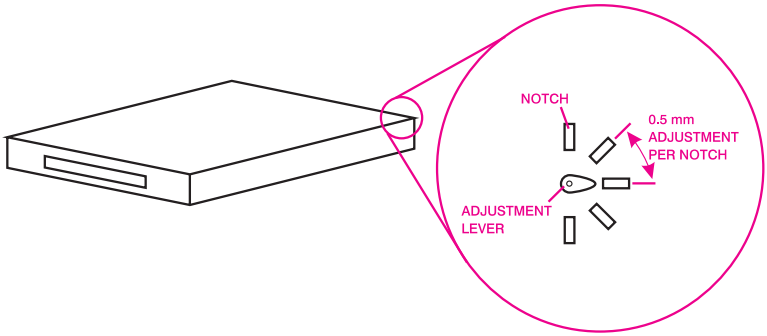

Figure 4-2 **Tray Position Adjustment**

1. If distance A is greater than distance B by more than 0.5 mm (0.02 inch), move the adjustment lever clockwise one notch.
2. If distance A is less than distance B by more than 0.5 mm (0.02 inch), move the adjustment lever counter-clockwise one notch.
3. After adjusting:
   - Reinstall the tray.
   - Re-run the Paper Path Test.
   - Recheck the measurements.
   - Re-adjust as necessary.

Download Service Manual And Resetter Printer at http://printer1.blogspot.com

2000-sheet Input Tray Adjustment Procedure

This procedure applies to the 2000-sheet Input Tray. To adjust Trays 2 and 3 (the standard paper trays in the printer) and the 2 x 500-sheet Input Tray (Trays 4 and 5) see page 90.

In some cases, the registration from the 2000-sheet Input Tray causes print to start too close to the edge of the paper. This situation is not a typical occurrence. In most cases the 2000-sheet Input Tray offset is fine. Although this may or may not be within specification, it is unacceptable to some users. Perform the following adjustment procedure to correct the situation.

1. With the 2000-sheet Input Tray stand-alone, remove left, right and rear covers from the tray.
2. Remove the vertical transfer unit.
3. Open the 2000-sheet Input Tray paper tray.
4. Loosen both screws that support the paper tray locking bracket on the right side of the 2000-sheet Input Tray (see figure 4-3).

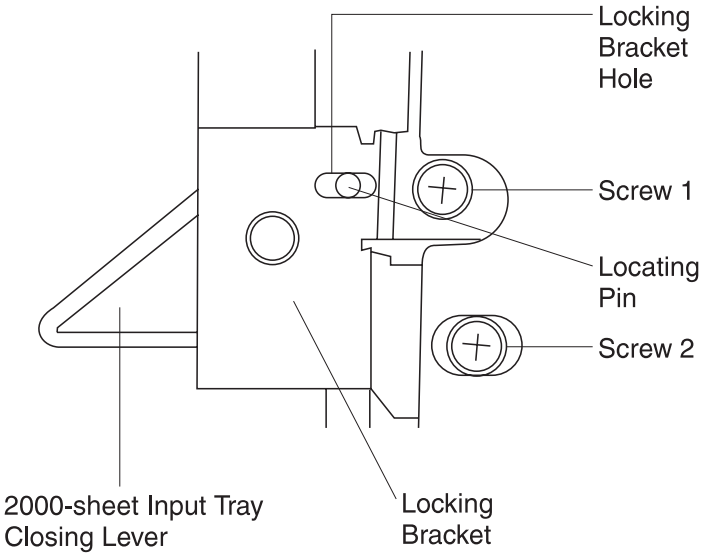

Figure 4-3 **Tray 4 Position Adjustment**

Download Service Manual And Resetter Printer at http://printer1.blogspot.com

5. Locate the bracket hole and pin at the middle (right side) (see figure 4-3).
6. Slide the bracket so that the locating pin is positioned at the middle of the bracket hole.
7. Tighten both screws.
8. Loosen both screws that support the paper tray locking bracket on the left side of the 2000-sheet Input Tray.
9. Locate the bracket hole and pin at the middle (left side).
   Slide the bracket so the locating pin is positioned at the middle of the bracket hole.
10. Tighten both screws.
11. Reassemble the vertical transfer unit.
12. Make sure all the cables (vertical transfer unit and paper deck drive assembly) are reconnected.
13. Reinstall left, right, and rear covers to the tray.

Note The locating pin position at the middle could still be unacceptable for some customers' applications. If so, repeat the procedure by moving the locating pin further back and testing the margin obtained.

Download Service Manual And Resetter Printer at http://printer1.blogspot.com

Download Service Manual And Resetter Printer at http://printer1.blogspot.com

5 Functional Overview

Chapter contents

Printer Functional Block Diagram - - - - - - - - - - - - - - - 96
Power Distribution System - - - - - - - - - - - - - - - - - - 97
Formatter System - 100
DC Controller System - 103
Image Formation System- - - - - - - - - - - - - - - - - - - 105
Paper Jam Detection - 148
Printer Timing - 148

Download Service Manual And Resetter Printer at http://printer1.blogspot.com

Printer Functional Block Diagram

Figure 5-1 is a functional block diagram of the printer showing the basic paths for signal, control, and media.

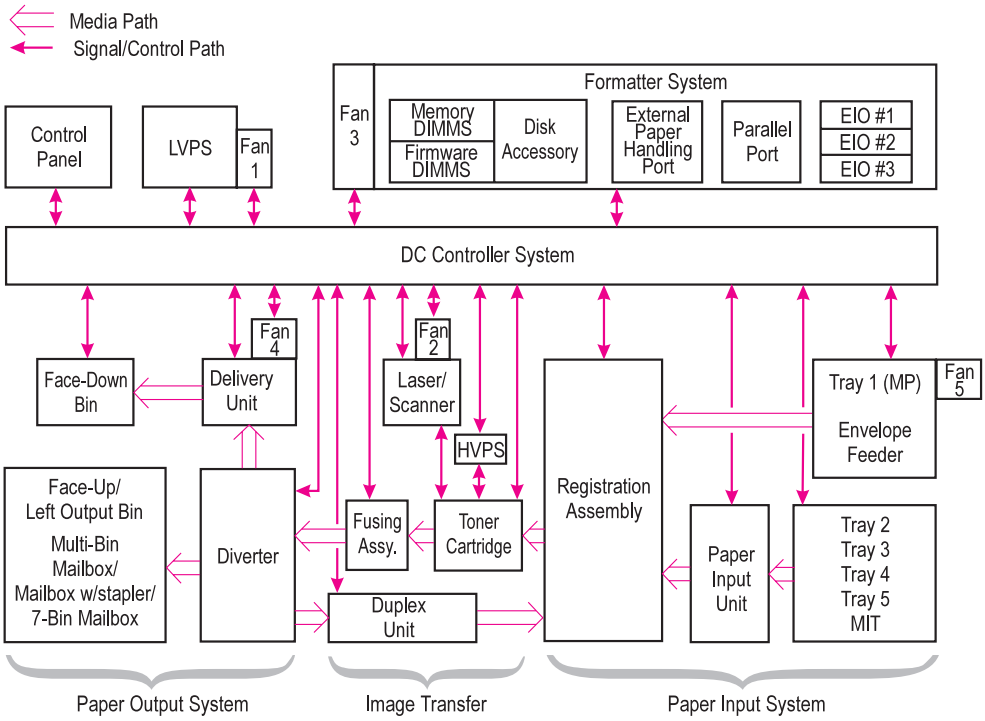

Figure 5-1 **Printer Functional Block Diagram**

Download Service Manual And Resetter Printer at http://printer1.blogspot.com

Power Distribution System

The AC and DC power supply circuits are contained in the Low Voltage Power Supply (LVPS). The high voltages required for image formation are generated by the High Voltage Power Supply (HVPS). The LVPS and Distribution System is illustrated in figure 5-2. See the Reference Diagrams at the end of Chapter 7 for more details.

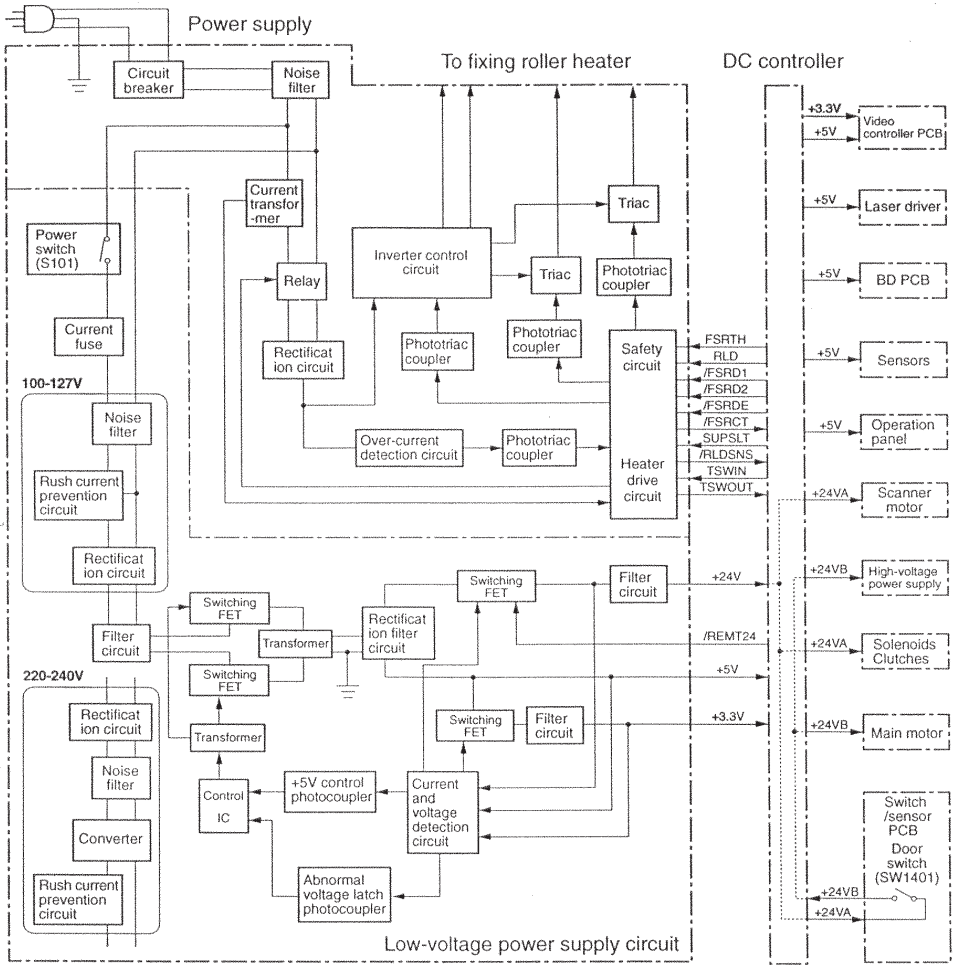

Figure 5-2 **Low Voltage Power Distribution System**

Download Service Manual And Resetter Printer at http://printer1.blogspot.com

AC Power Distribution

The AC power circuitry supplies AC voltage whenever the power cord is connected, and the power switch is on. A toner cartridge must be installed and the top access door must be closed before AC voltage is supplied to the DC power circuits or the Fusing Assembly.

Overcurrent/Overvoltage Protection

There are two overcurrent/overvoltage devices in this printer:

- The resettable circuit breaker (CB101) shuts off AC input power to the LVPS in case of an AC overcurrent condition. To reset, remove the LVPS and press in the circuit breaker button (figure 5-3, callout 1).
- Fuse 101 interrupts AC input power to the +24V DC and +5V DC power circuits.

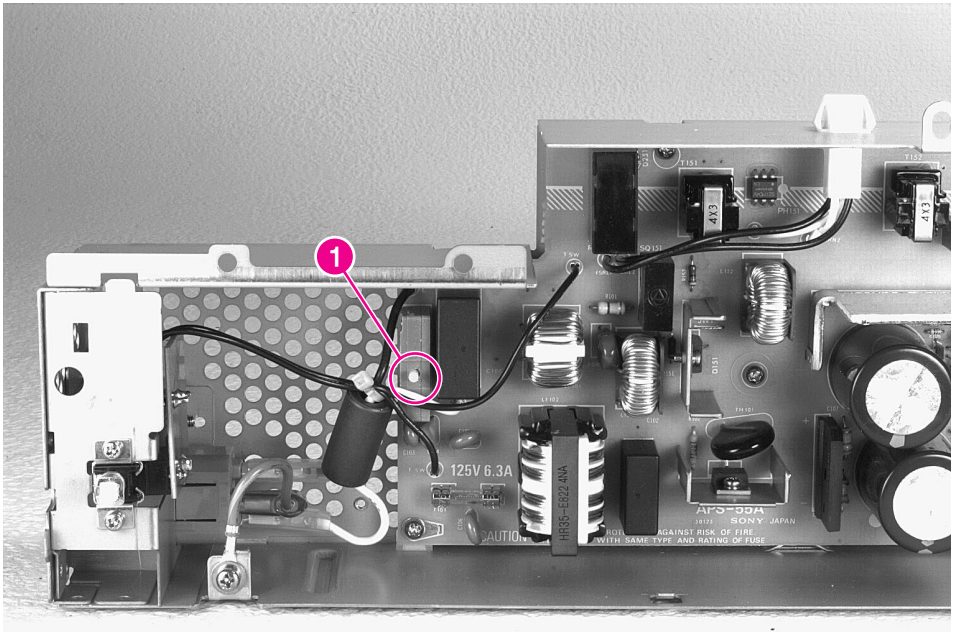

Figure 5-3 **Low Voltage Power Supply**

Download Service Manual And Resetter Printer at http://printer1.blogspot.com

High Voltage Power Distribution

The High Voltage Power Supply (HVPS, see figure 5-4) applies a DC-biased AC voltage to the primary charging roller and the developing roller, and a programmed DC voltage (depending upon the phase of the printing process) to the Transfer Roller. See the General Timing Diagram (figure 5-29 on page 149) for HVPS timing information.

Toner Cartridge Detection

A toner level detector inside the toner cartridge is connected to the HVPS when the toner cartridge is installed. If the toner level drops below a predefined level, the `TONER LOW` message will appear on the display panel. If the toner cartridge is missing, `INSTALL TONER CARTRIDGE` will be displayed.

Print Density Adjustment

The high voltage power supply also controls the image density by varying the voltages applied to the developing cylinder in the toner cartridge. These voltages determine the amount of toner applied to the photosensitive drum. Print density is adjusted from the control panel (Print Quality Menu) or from the driver software.

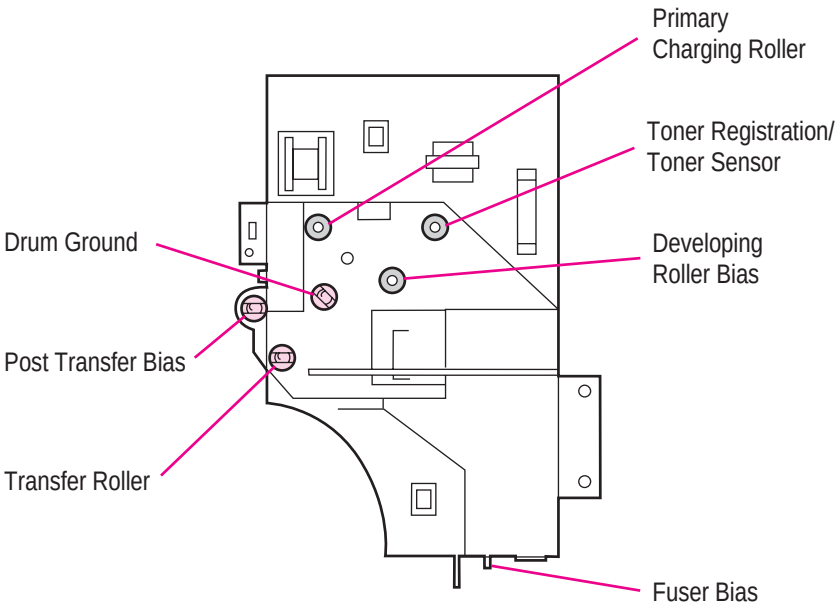

Figure 5-4 **High Voltage Power Supply Contacts**

Download Service Manual And Resetter Printer at http://printer1.blogspot.com

Formatter System

The Formatter PCA is responsible for the following:

- Controlling the PowerSave mode.
- Receiving and processing print data from the various printer interfaces.
- Monitoring Control Panel inputs and relaying printer status information (through the Control Panel and the bidirectional I/O).
- Developing and coordinating data placement and timing with the print engine.
- Storing font information.
- Communicating with the host computer through the bidirectional Interface.

The Formatter PCA receives a print job from the bidirectional parallel port (IEEE 1284) and separates it into image information and instructions which control the printing process. The DC Controller synchronizes the Image Formation System with the Paper Input and Output Systems, and then signals the Formatter to send the print image data. The Formatter sends the print image data (dots) in the form of a VIDEO signal to start the printing process.

The Formatter PCA also provides the electrical interface and mounting locations for three EIO cards, additional memory DIMMs, the Disk Accessory, the 8-bin Mailbox/5-bin Mailbox with Stapler, the 7-bin Tabletop Mailbox, and the 2 x 500-sheet Input Tray (Trays 4 and 5).

PowerSave

This user-adjustable feature (Configuration Menu) conserves power by shutting down the fuser and exhaust fans after the printer has been idle for 15 minutes; 30 minutes; 1, 2, or 3 hours. The printer retains all printer settings, downloaded fonts, and macros while in PowerSave mode. The default setting is PowerSave on, with a 1-hour idle time. (PowerSave can also be turned off from the control panel.)

The printer exits PowerSave mode and enters the warm-up cycle when any of the following occurs:

- A print job, valid data, or a PML or PJL command is received at the parallel port or an EIO card.
- A Control Panel key is pressed.
- Any printer door (except the front access door) is opened and then closed.

Download Service Manual And Resetter Printer at http://printer1.blogspot.com

- A paper tray is opened and then closed.
- The Engine Test microswitch is pressed.

Note Printer error messages override the PowerSave message. The printer will enter PowerSave mode at the appropriate time, but the error message will continue to be displayed.

Resolution Enhancement (REt)

The Formatter PCA contains circuitry for Resolution Enhancement technology (REt), which modifies the standard video dot data on its way to the DC Controller to produce “smoothed” black-to-white boundaries. REt is user-controllable (on or off) from the control panel, or from some software applications. The default setting is on.

Note REt settings sent from software applications or printer drivers override the control panel settings.

Download Service Manual And Resetter Printer at http://printer1.blogspot.com

EconoMode

The EconoMode setting uses less toner than the normal printing mode by reducing the dot density. EconoMode, which is a draft-quality printing mode, is user selectable via the control panel (Print Quality Menu) and some software applications. The default setting is off.

Note EconoMode does not affect print speed, memory usage, nor extend toner cartridge life.

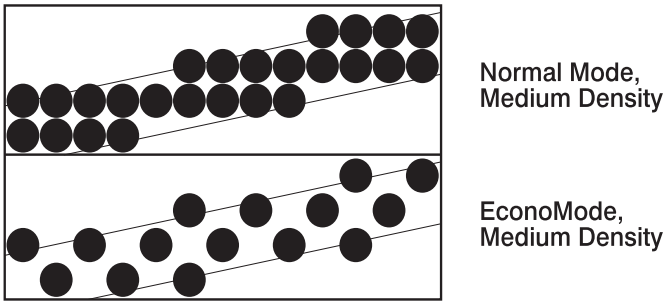

Figure 5-5 **Normal Mode vs EconoMode**

Download Service Manual And Resetter Printer at http://printer1.blogspot.com

DC Controller System

The following systems and functions are controlled by the DC Controller PCA:

- DC Power Distribution (+3.3V DC, +5V DC, +24V DC)
- Laser and Scanner Drive
- Paper Motion Monitoring and Control (photosensors and flags)
- Clutches (registration, tray pickup, and Tray 1 feed)
- Engine Test
- Motors (Main Drive, Scanner, and Fans)

Figure 5-2 on page 97 shows the Low Voltage Power Supply and Distribution System. See the wiring diagrams at the end of Chapter 7 for detailed listings of the DC Controller inputs and outputs.

Laser and Scanner Drive

Based on information received from the Formatter, the DC Controller sends signals to the Laser/Scanner Assembly to modulate the laser diode on and off and to drive the Laser/Scanner motor. See “Image Formation System” later in this chapter for more information.

Paper Motion Monitoring and Control

The DC Controller PCA controls paper motion by continuously monitoring the various paper sensors and coordinating paper movement with the other print processes.

Clutches

The DC Controller PCA provides drive signals for the Registration Assembly Clutch (CL1), Paper Input Unit Clutch (CL2), and the Tray 1 Feed Clutch. The External Paper Handling PCA mounted on the Formatter Assembly provides the control signals for the clutches in the 2000-sheet Input Tray, 8-bin Mailbox/5-bin Mailbox with Stapler, 2 x 500-sheet Input Tray, and 7-bin Tabletop Mailbox.

Note Refer to figure 5-2 for details.

Download Service Manual And Resetter Printer at http://printer1.blogspot.com

Engine Test Microswitch

The Engine Test Microswitch, located on the top side of the DC Controller PCA, is activated manually through the square access hole at the top right side of the printer (Figure 6-6). This switch causes the print engine to perform an internal self test diagnostic which bypasses the Formatter PCA and then prints a full page of black parallel lines. This test is useful for troubleshooting printer problems because it isolates the print engine from the Formatter PCA. The engine test printout prints from Tray 3 only and can be activated with the Formatter PCA removed. A continuous test is performed indefinitely if the test button is held in. For more information, see Engine Test in Figure 7-4.

Motors

See the General Timing Diagram (figure 5-29 on page 149) for specific timing details for the printer motors.

The Main Motor, **MT1,** is controlled by the DC Controller PCA. The Main Motor drives the Main Gear Assembly and rotates during the Initial Rotation period (following power-on), the Print period, the Last Rotation Period, or whenever the printer front door is opened and closed.

The Scanner Motor is controlled and monitored by the DC Controller. It rotates the laser/scanner mirror during the Initial Rotation period and the Print period.

The Fan Motors are controlled and monitored by the DC Controller PCA. All five fans operate at full speed during the printing modes. All five fans turn off in the PowerSave mode after the Fuser cools down.

The drive signal for the Tray 2 and 3 Paper Pickup Motor, **SMT1**, is provided by the DC Controller PCA through the Paper Input Unit (PIU) PCA mounted on the right side of the PIU. When the job instructions call for paper to be supplied by Tray 2, SMT1 rotates in a forward direction and drives the Pickup roller for Tray 2. When paper is supplied by Tray 3, SMT1 rotates in the reverse direction and drives the Pickup roller for Tray 3.

Download Service Manual And Resetter Printer at http://printer1.blogspot.com

Image Formation System

Laser printing requires the interaction of several different technologies (such as electronics, optics, and electrophotographics) to provide a printed page. Each process functions independently and must be coordinated with the other printer processes. The image formation process consists of six steps:

1. Drum Cleaning
2. Drum Conditioning
3. Image Writing
4. Image Developing
5. Image Transferring and Media Separation
6. Image Fusing

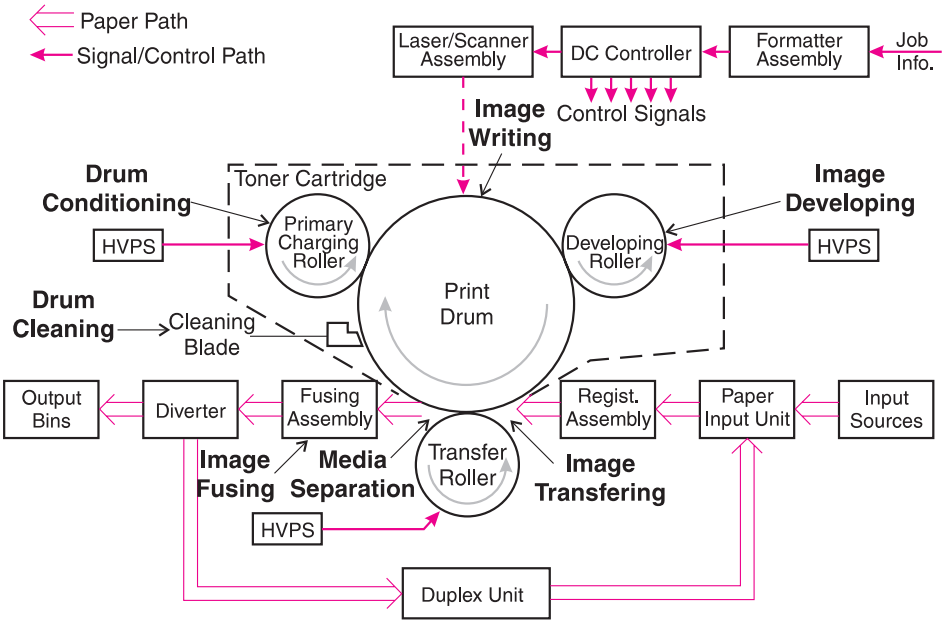

Figure 5-6 **Image Formation Block Diagram**

Download Service Manual And Resetter Printer at http://printer1.blogspot.com

Toner Cartridge

The toner cartridge is the “heart” of the Image Formation System. It houses the cleaning, conditioning, and developing steps of the process. The toner cartridge contains the photosensitive drum, primary charging roller, developing station, toner cavity, and cleaning station. Including the components that wear, degrade, or are consumed in a customer-replaceable toner cartridge eliminates the need for a service call when replacement is required.

Toner Cartridge/High Voltage Power Supply Contacts

The toner cartridge has three contacts that route voltage from the HVPS PCA. They are:

- Upper: Primary Charge
- Middle: Developing Bias
- Lower: Toner Sensing/Toner Recognition

Download Service Manual And Resetter Printer at http://printer1.blogspot.com

The Photosensitive Drum

The image from the Laser/Scanner Assembly is written on the drum surface, developed, and transferred to the media. The drum is an aluminum cylinder. The aluminum base of the photosensitive drum is electrically connected to ground potential. The outside of the cylinder is coated with a layer of non-toxic organic-photoconductive (OPC) material. The OPC material becomes electrically conductive when exposed to light. The drum surface is first cleaned of excess toner, then conditioned with a uniform negative charge. When an area on the drum surface is exposed to the laser light beam, the negative charge in that area is conducted to the ground potential of the drum base and thus becomes more positive. Areas not exposed to light remain non-conductive and maintain their negative charge.

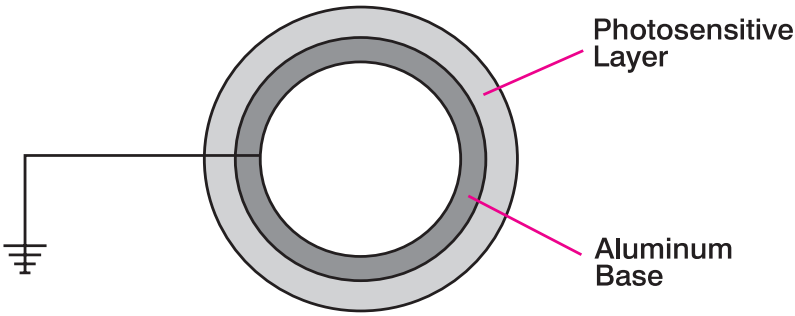

Figure 5-7 **Photosensitive Drum**

Download Service Manual And Resetter Printer at http://printer1.blogspot.com

Drum Cleaning

The cleaning blade inside the toner cartridge is in contact with the surface of the drum at all times. As the drum rotates during printing, excess toner is removed from the drum surface and stored in the waste toner receptacle inside the toner cartridge.

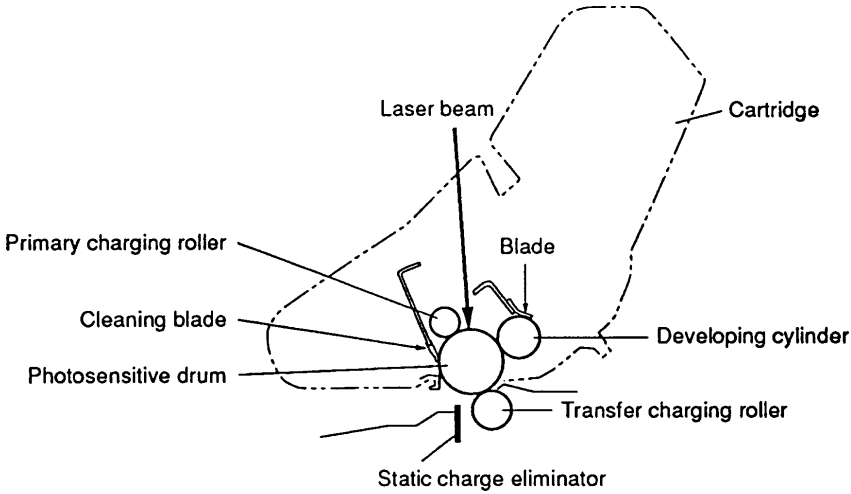

Figure 5-8 **Drum Cleaning**

Download Service Manual And Resetter Printer at http://printer1.blogspot.com

Drum Conditioning

After the drum is physically cleaned, it is conditioned by applying a uniform negative charge across the surface of the drum with the primary charging roller, located in the toner cartridge. The primary charging roller is coated with conductive rubber, charged with an AC current that erases any residual charges, and produces a uniform drum surface potential. The AC current is centered around a negative DC bias which changes according to the Print Density setting.

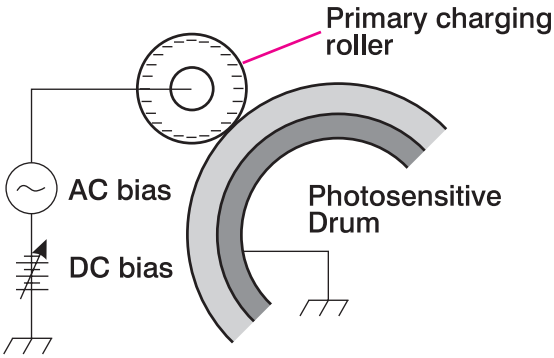

Figure 5-9 **Primary Charging Roller**

Download Service Manual And Resetter Printer at http://printer1.blogspot.com

Image Writing

During the writing process, a modulated laser diode projects a beam onto a rotating six-sided scanning mirror. As the scanning mirror rotates, the beam is directed through a set of focusing lenses to another mirror that reflects it through a slot on the top of the toner cartridge and onto the photosensitive drum. The beam sweeps across the drum and discharges the negative potential wherever it strikes the surface. This creates a latent (invisible) electrostatic image, which is developed into a visible image as the drum rotates (see figure 5-10).

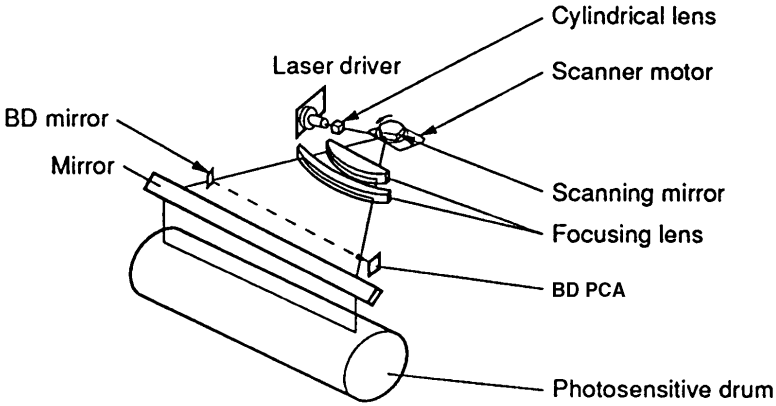

Figure 5-10 **Image Writing**

Because the beam is sweeping the entire length of the drum and the drum is rotating, the entire surface area of the drum can be covered. The speed of the laser/scanner motor (which turns the scanning mirror) and the speed of the main motor (which turns the drum) are synchronized, and each successive sweep of the beam is offset 1/600th of an inch. The beam can be turned on and off to place a dot of light every 1/600th of an inch. This is how the printer achieves its 600 x 600 dpi resolution. After the writing process, the drum surface has a latent (invisible) electrostatic image.

At the end of each sweep, the beam strikes the beam detect lens, generating the Beam Detect (BD) signal. The BD signal is sent to the DC Controller, where it is converted to an electrical signal used to synchronize the output of data (VDO) for one sweep (scan line) and to diagnose problems with the laser diode or laser/scanner motor.

Download Service Manual And Resetter Printer at http://printer1.blogspot.com

FastRes 1200

FastRes 1200 (PCL 6 only) is an HP developed technology that can represent each dot space as one of four different levels of black. However, FastRes 1200 uses only 2 data bits to store information for the same dot space. This means that only half as much RAM is needed to print an image.

FastRes 1200 takes advantage of HP's new smaller toner particle (less than 5 microns) to provide superb test and image quality.

Download Service Manual And Resetter Printer at http://printer1.blogspot.com

Image Developing

The developing process changes the latent electrostatic image into a visible image by depositing negatively charged toner particles on the exposed areas of the drum. The developing station is located inside the toner cartridge and consists of a metallic cylinder that rotates around a fixed magnetic core.

The developing cylinder is charged with an AC current that is centered around a negative DC bias. The AC current improves density and contrast by decreasing the attraction between the toner particles and the magnetic core of the cylinder. This increases the repelling action of the toner against the areas of the drum not exposed to laser light. The negative DC bias applied to the developing cylinder is also changed according to the Print Density setting. Both the primary charging roller and developing cylinder DC bias voltages are changed in response to the density setting. These changes in DC bias cause either more or less toner to be attracted to the drum, thus increasing or decreasing print density.

The toner is a powdery substance made of black plastic resin bound to iron particles. The toner particles are attracted to the magnetic core of the developing cylinder. A rubber blade “brushes” the toner on the developing cylinder to a uniform thickness.

Download Service Manual And Resetter Printer at http://printer1.blogspot.com

The toner particles obtain a negative static charge by rubbing against the developing cylinder, which is charged with a negative DC bias. The negatively charged toner is attracted to the discharged (exposed, more positive) areas of the drum and repelled from the negatively charged (non-exposed) areas.

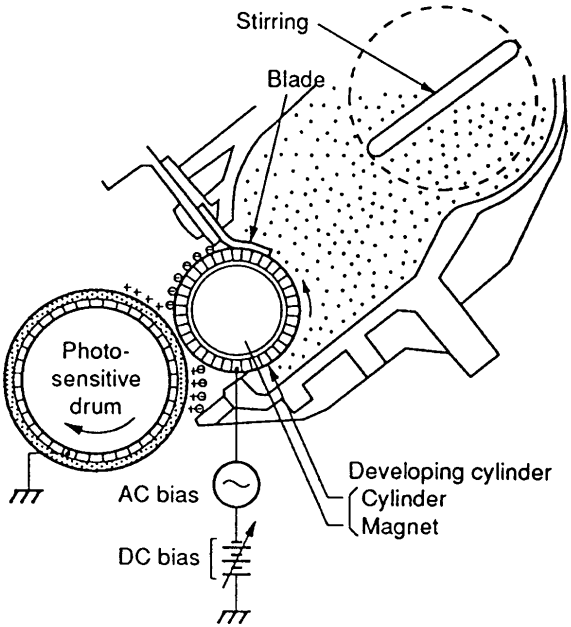

Figure 5-11 **Image Development**

Download Service Manual And Resetter Printer at http://printer1.blogspot.com

Image Transferring and Media Separation

During the image transferring process, the toner image on the drum surface is transferred to the media. A positive charge applied to the back of the media by the transfer roller causes the negatively charged toner particles on the drum surface to be attracted to the media.

The small diameter of the drum, combined with the stiffness of the media, causes the media to separate easily from the drum. The static eliminator teeth also help separate the paper from the drum. The static eliminator teeth weaken the attractive forces between the negatively charged drum surface and the positively charged paper. This action keeps thin media from wrapping around the drum. After separation, the drum is cleaned and conditioned for the next image.

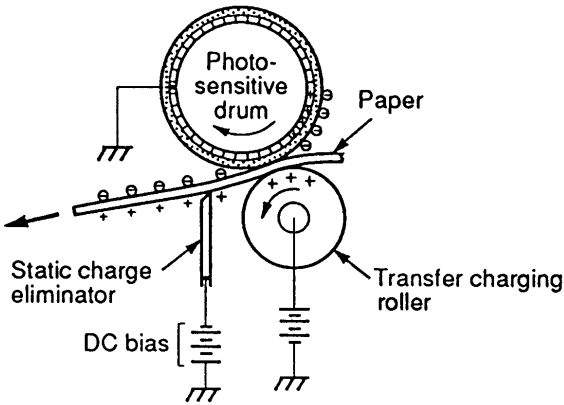

Figure 5-12 **Image Transferring and Media Separation**

Download Service Manual And Resetter Printer at http://printer1.blogspot.com

Image Fusing

The Fusing Assembly bonds the toner particles into the media with a heated fusing roller and a soft pressure roller. There are two levers on the Fusing Assembly that adjust roller pressure for single sheets (down position) or envelopes (up position). Both levers must be set to the same position.

The fusing roller contains two quartz-halogen lamps that provide heat for the fusing process. Fusing temperature is monitored by the DC Controller PCA via thermistor TH1. The DC Controller maintains a temperature of about 190° C during print mode. If the fusing system overheats (about 230° C), TH1 opens, interrupting power to the fusing heater, causing a `50.X FUSER ERROR`. If the fusing system exceeds 230° C, the thermal fuse opens, moving power away from the fuser.

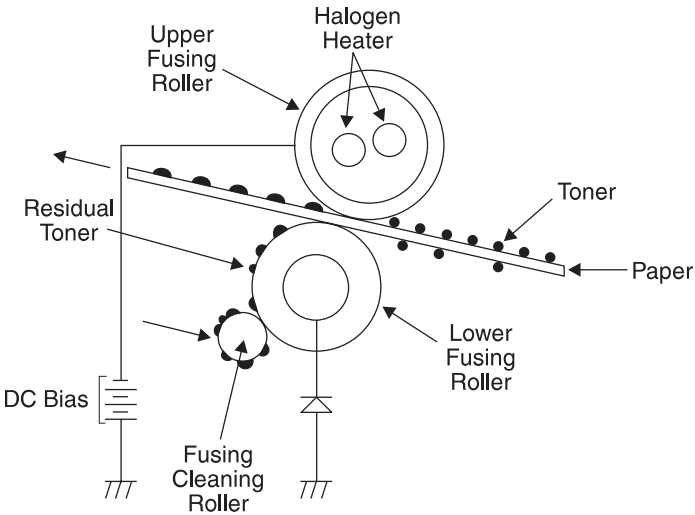

Figure 5-13 **Image Fusing**

Download Service Manual And Resetter Printer at http://printer1.blogspot.com

Paper Paths and Components

Printer, Duplexer, and Envelope Feeder

The components of the printer paper path are illustrated in figure 5-14. Figure 5-15 and table 5-1 illustrate and describe all of the printer sensors, solenoids, clutches, motors, and fans.

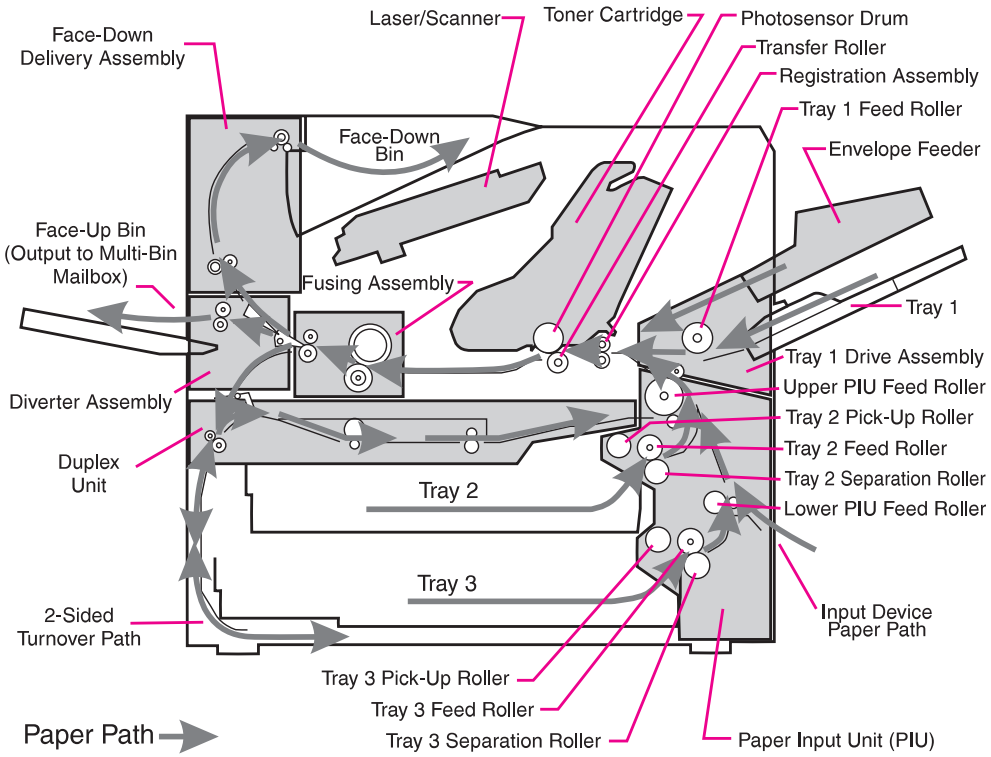

Figure 5-14 **Printer Paper Paths**

Download Service Manual And Resetter Printer at http://printer1.blogspot.com

Table 5-1. Printer Sensors, Solenoids, Clutches, Motors, and Fans

Control Device	Title	Location
CL1	Registration Clutch	PIU (right side)
CL2	Paper Input Unit Feed Clutch	PIU (right side)
CL3	Tray 1 Feed Clutch	Tray 1 Drive Unit
Fan 1	Laser/Scanner Fan	Under Top Cover
Fan 2	Low Voltage Power Supply	LVPS
Fan 3	Formatter Fan	Below Formatter
Fan 4	Face-down Delivery Unit Fan	Under Top Cover
Fan 5	Tray 1 Fan	Tray 1 Assembly
MT1	Main Motor	Behind HVPS
PS1	Registration Paper Sensor	Registration Assembly (center)
PS2	Paper Input Unit Paper Sensor	Paper Input Unit (top, center)
PS1201	Tray 3 Paper Present Sensor	Paper Input Unit PCA
PS1202	Tray 2 Paper Present Sensor	Paper Input Unit PCA
PS1203	Tray 3 Paper Level Sensor 1	Paper Input Unit PCA
PS1204	Tray 3 Paper Level Sensor 2	Paper Input Unit PCA
PS1205	Tray 2 Paper Level Sensor 1	Paper Input Unit PCA
PS1206	Tray 2 Paper Level Sensor 2	Paper Input Unit PCA
PS1207	Tray 3 Paper Out Sensor	Paper Input Unit PCA
PS1208	Tray 2 Paper Out Sensor	Paper Input Unit PCA
PS1301	Tray 1 Paper Present Sensor	Tray 1 Drive Unit PCA
PS1302	Tray 1 Lifting Plate Position Sensor	Tray 1 Drive Unit PCA
PS1401	Face-down Bin Full Sensor	Switch/Sensor PCA
PS1402	Face-down Bin Delivery Sensor	Switch/Sensor PCA
PS1403	Fuser Delivery Sensor	Switch/Sensor PCA
SL1	Tray 2 and 3 Paper Pickup Solenoid	PIU (right side)
SL2	Tray 1 Lifting Plate Solenoid	Tray 1 Drive Unit
SL3	Face-up Bin Delivery Solenoid	Left Rear Corner of Chassis (behind diverter door)
SMT1	Tray 2 and 3 Paper Pickup Motor	PIU (right side)
SW1401	Doors Open Switch	Switch/Sensor PCA
Tray 2, SW1601	Tray 2 Paper Size Sensing Switch	Behind LVPS
Tray 2, SW1602	Tray 2 Paper Size Sensing Switch	Behind LVPS

Download Service Manual And Resetter Printer at http://printer1.blogspot.com

Table 5-1. Printer Sensors, Solenoids, Clutches, Motors, and Fans (continued)

Control Device	Title	Location
Tray 2, SW1603	Tray 2 Paper Size Sensing Switch	Behind LVPS
Tray 2, SW1604	Tray 2 Paper Size Sensing Switch	Behind LVPS
Tray 3, SW1601	Tray 3 Paper Size Sensing Switch	Behind LVPS
Tray 3, SW1602	Tray 3 Paper Size Sensing Switch	Behind LVPS
Tray 3, SW1603	Tray 3 Paper Size Sensing Switch	Behind LVPS
Tray 3, SW1604	Tray 3 Paper Size Sensing Switch	Behind LVPS

Note See figure 5-15 for the locations of sensors, solenoids, clutches, motors and fans in table 5-1.

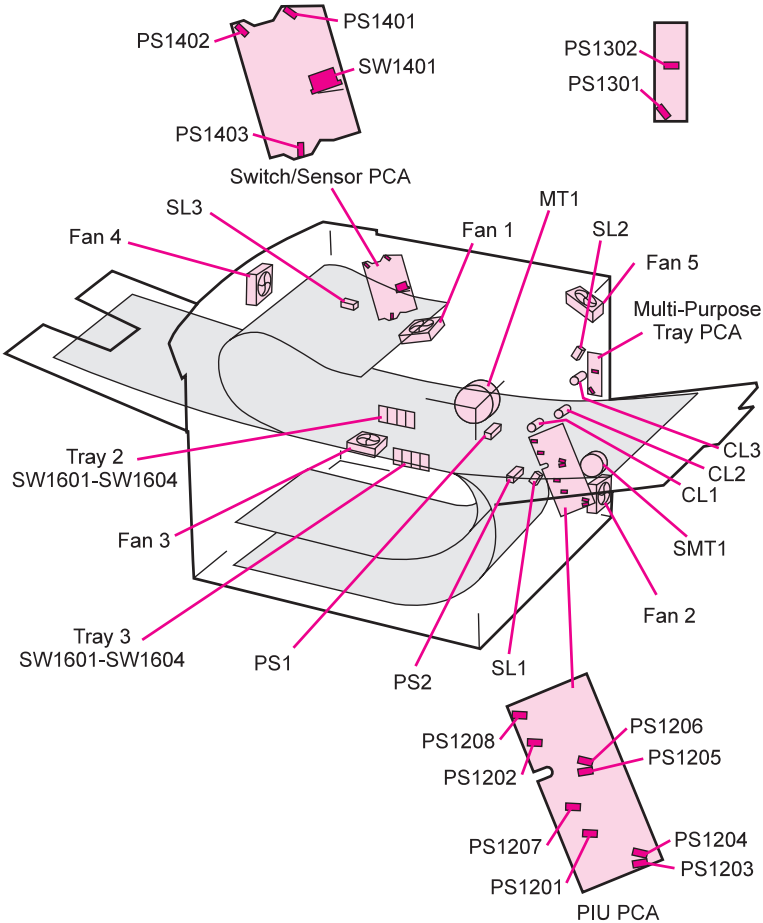

Figure 5-15 **Printer Sensors, Solenoids, Clutches, Motors, and Fans**

Download Service Manual And Resetter Printer at http://printer1.blogspot.com

Paper Size Switches (Trays 2 and 3)

The paper guides in Trays 2 and 3 operate four levers at the back of the trays that activate the size sensing switches (SW1601 through SW1604) mounted in the printer chassis. Paper sizes are compared to switch conditions in table 5-2.

Table 5-2. Paper Size Switches

Paper Size	SW1601	SW1602	SW1603	SW1604
Ledger (portrait)	OFF	OFF	OFF	OFF
A3 (portrait)	OFF	ON	OFF	OFF
B4 (portrait)	ON	OFF	OFF	OFF
Legal (portrait)	ON	ON	OFF	OFF
Letter (landscape)	OFF	OFF	OFF	ON
A4 (landscape)	OFF	OFF	ON	OFF

Printing from Tray 1

The presence of paper in Tray 1 is detected by the Tray 1 Paper Present Sensor (PS1301). The lifting plate pressurization solenoid (SL2) is then activated, releasing the plate that applies upward pressure on the paper and causing it to contact the Tray 1 pickup roller. The Tray 1 Feed Clutch (CL3) turns on at this time and feeds the paper from Tray 1 to the registration position.

The remainder of the Tray 1 print process is identical to the Tray 2 and 3 process, described in “Printing from Tray 1” on page 119.

Printing from Trays 2 and 3

The Pickup, Feed, and Separation rollers start rotating when the DC Controller receives the /PRNT signal from the Formatter PCA. Then, the DC Controller activates the Pickup Solenoid (SL1) and starts feeding paper through the Paper Input Unit (PIU), triggering photosensors PS2 and then PS1. These sensors inform the DC Controller that paper has passed through the PIU and is present at the Registration Assembly.

When the Laser/Scanner and Fuser are ready, the DC Controller sends the /VSREQ signal to the Formatter. When the Formatter has processed the print data, it sends the /VSYNC and /VDO signals to the DC Controller. The paper is then released from the Registration Assembly (by CL1) and fed to the photosensitive drum, starting the

Download Service Manual And Resetter Printer at http://printer1.blogspot.com

image transfer and fusing processes. After the paper passes through the Fuser, it triggers PS1403 and PS1402 to the specified type, size, and destination of the paper being fed through the printer.

Printing from the Envelope Feeder

The Envelope Feeder mounts in slots above Tray 1. The printer can print from Tray 1 even during the installation of the Envelope Feeder. When the print job calls for an envelope, it is fed directly to the Registration Assembly. From there, the print process is identical to the Tray 2 and 3 process, described in “Printing from Tray 1” on page 119.

Printing with the Duplexer

The duplexer mounts inside the printer below the Fusing Assembly. The back side of the paper is printed first, the paper is turned over, and then fed back to the Registration Assembly for front side printing. When the print job calls for 2-sided printing, a solenoid in the duplexer operates the duplex flipper in the Diverter Assembly and routes the paper to the duplexer. The paper does not exit the printer when being turned over for 2-sided printing. It is routed through a slot in the back of the duplexer, down inside the left cover and under Tray 3. When the duplexer senses the trailing edge of the paper, it reverses direction and feeds the paper back through the duplexer to the Registration Assembly.

Download Service Manual And Resetter Printer at http://printer1.blogspot.com

2000-sheet Input Tray (Tray 4) Components

The HP 2000-sheet Input Tray now supports variable engine input speeds, ranging from 6 to 32 ppm. The 2000-sheet Input Tray also automatically senses paper size. Figure 5-16 illustrates the paper path components in the 2000-sheet Input Tray. Table 5-3 and figure 5-17 describe and illustrate the sensors, switches, clutches, and motors on the 2000-sheet Input Tray.

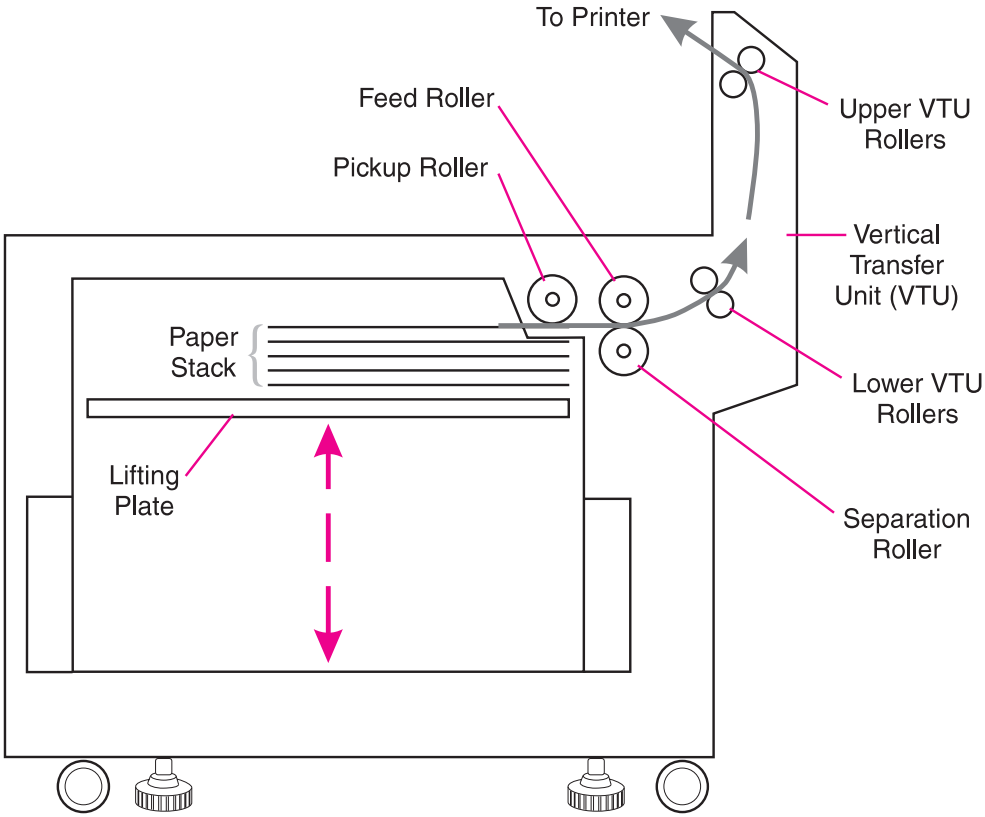

Figure 5-16 **2000-sheet Input Tray Paper Path**

Download Service Manual And Resetter Printer at http://printer1.blogspot.com

Table 5-3. 2000-sheet Input Tray Sensors, Switches, Clutches and Motors

Control Device	Description	Location
CL31	Vertical Transfer Unit (VTU) Clutch	Vertical Transfer Unit (VTU)
CL32	Main Drive Clutch	VTU
MT31	Main Motor	Paper Deck Drive Assembly
PS31	Paper Entry Sensor	VTU
PS32	Paper Exit Sensor	VTU
PS33	Paper Tray Empty Sensor	Paper Pickup Assembly
PS34	Paper Tray Raised Sensor	Paper Pickup Assembly
PS35	VTU Closed Sensor	Paper Pickup Assembly
SW601-SW602	Paper Quantity Switches	Lower Chassis
SW701-SW704	Paper Size Switches	Lower Chassis
Power Supply Switch	Normal/Diagnostic Mode Switch	Power Supply
VTU Motor	Vertical Transfer Unit Motor for entry and exit rollers	VTU

Download Service Manual And Resetter Printer at http://printer1.blogspot.com

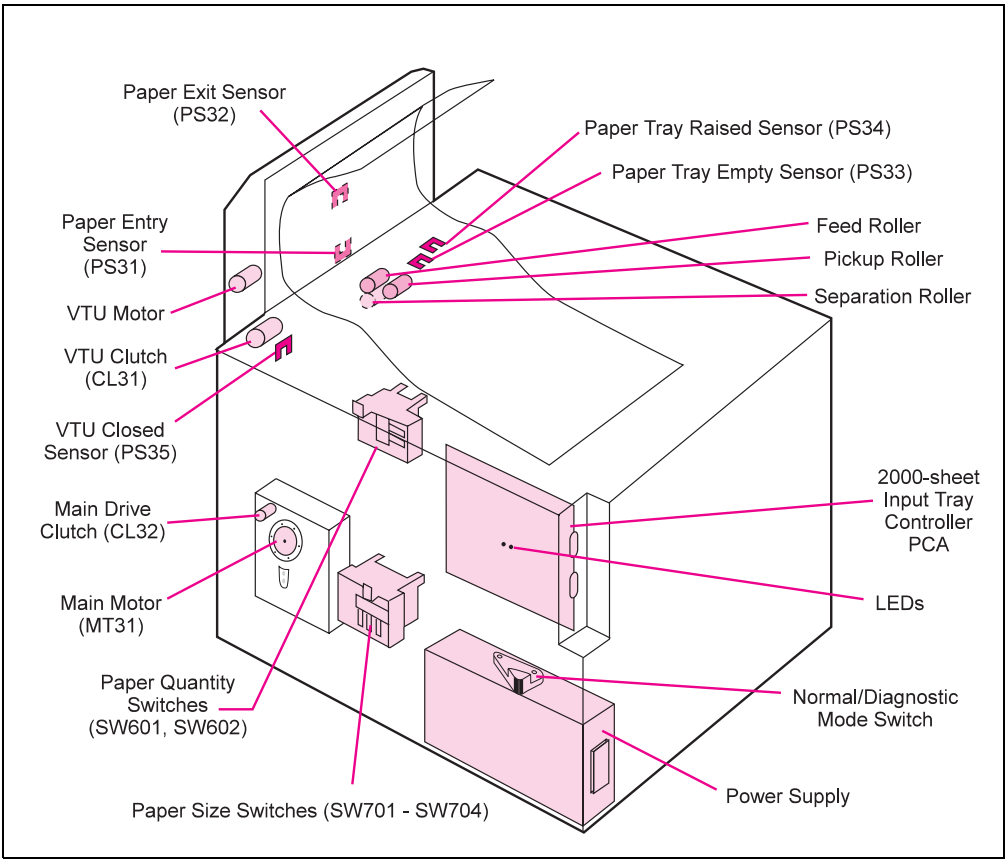

Figure 5-17 **2000-sheet Input Tray Sensors, Switches, Clutches, and Motors**

2000-Sheet Input Tray Operation

Pickup and Feed System

When the 2000-sheet Input Tray is loaded with paper and the paper tray is closed, the paper stack moves into position under the Pickup, Feed, and Separation Rollers. This operation is detected by the PS34 sensor in the 2000-sheet Input Tray's Pickup Assembly. The presence of paper in the paper tray is detected by the PS33 sensor. The paper level is detected by switches SW601 and SW602 in the Paper Quantity Switch Assembly. The paper size is detected by switches SW701 through SW704 in the Paper Size Switch Assembly. Tables 5-4 and 5-5 show the paper quantity and paper size switches on the 2000-sheet Input Tray.

Download Service Manual And Resetter Printer at http://printer1.blogspot.com

Table 5-4. 2000-sheet Input Tray Paper Quantity Switches

SW601	SW602	Remaining Paper
Off	Off	100%
On	Off	75%
On	On	50%
Off	On	25%

Table 5-5. 2000-sheet Input Tray Paper Size Switches

Paper Size	SW701	SW702	SW703	SW704
Ledger (portrait)	Off	On	Off	Off
A3 (portrait)	On	On	Off	Off
B4 (portrait)	Off	Off	On	Off
Legal (portrait)	Off	On	On	Off
Letter (landscape)	Off	On	Off	On
A4 (landscape)	On	On	Off	On

When the Paper Handling Controller on the printer sends an input command to the Controller PCA on the 2000-sheet Input Tray, the Paper Deck Driver runs the Pickup Motor to rotate the Pickup, Feed, and Separation Rollers. As the Pickup Roller turns, the paper feeds into the Vertical Transfer Unit (VTU) and passes through the PS31 and PS32 sensors .

If the paper fails to reach the PS31 and PS32 sensors in the VTU within the allotted time, the Controller PCA on the 2000-sheet Input Tray assumes that a paper jam has occurred. The 2000-sheet Input Tray stops the operation and reports the paper jam to the Paper Handling Controller on the printer. A paper jam message appears on the printer control panel display.

Hardware malfunctions are also displayed on the printer control panel.

Download Service Manual And Resetter Printer at http://printer1.blogspot.com

Lifter Operation

The lifter plate in the 2000-sheet Input Tray's paper tray is held by two wires that are wound on four pulleys by the Lifter Motor. When the paper tray is open, the pulley gears disengage from the motor gears, and the Lifter lowers by its own weight. The presence or absence of the tray is detected by switches SW701 through SW704 on the unit's Paper/Tray Size Switch Assembly.

After the paper tray is closed, the Lifter Motor lifts the paper stack into position; this action is detected by the PS34 sensor. The PS34 sensor also maintains the height of the paper stack. As paper is picked up by the rollers, the number of sheets decreases. Once the paper stack decreases to a certain level, the PS34 sensor registers a low condition. Then the Paper Deck Driver turns on the Lifter Motor again and lifts the paper stack until the PS34 sensor registers sufficient paper in the tray.

Power Supply

The 2000-sheet Input Tray has an internal Power Supply that activates when the printer's power switch is turned on. The Paper Handling Controller on the printer sends a power-on signal to the Power Supply on the 2000-sheet Input Tray through the Controller PCA on the 2000-sheet Input Tray. When the signal is high, the Power Supply provides both +24V and +5V to the Paper Deck Driver. The +24V drives the motors, clutches, and solenoids for the lifter, feed, and pickup systems. The +5V drives the sensors and PCA electronics.

Printing from the 2000-sheet Input Tray (Tray 4) or 2 x 500-sheet Input Tray (Trays 4 and 5)

Trays 4 and 5 feed the paper upward through a guide slot in the Lower Right Door Assembly to the Paper Input Unit. Once there, the operation is the same as printing from Trays 2 and 3, described in "Printing from Tray 1" on page 119.

Download Service Manual And Resetter Printer at http://printer1.blogspot.com

2 x 500-sheet Input Tray

The 2 x 500-sheet Input Tray is an input paper handling device that provides two additional input trays that hold up to 500 sheets each. The device is designed to support different printer platforms with variable engine input speeds, from 6 to 32 pages per minute, and provide storage space for printer supplies or consumables. The device has automatic paper size sensing and enhanced network management capabilities.

The 2 x 500-sheet Input Tray paper path is shown in figure 5-18.

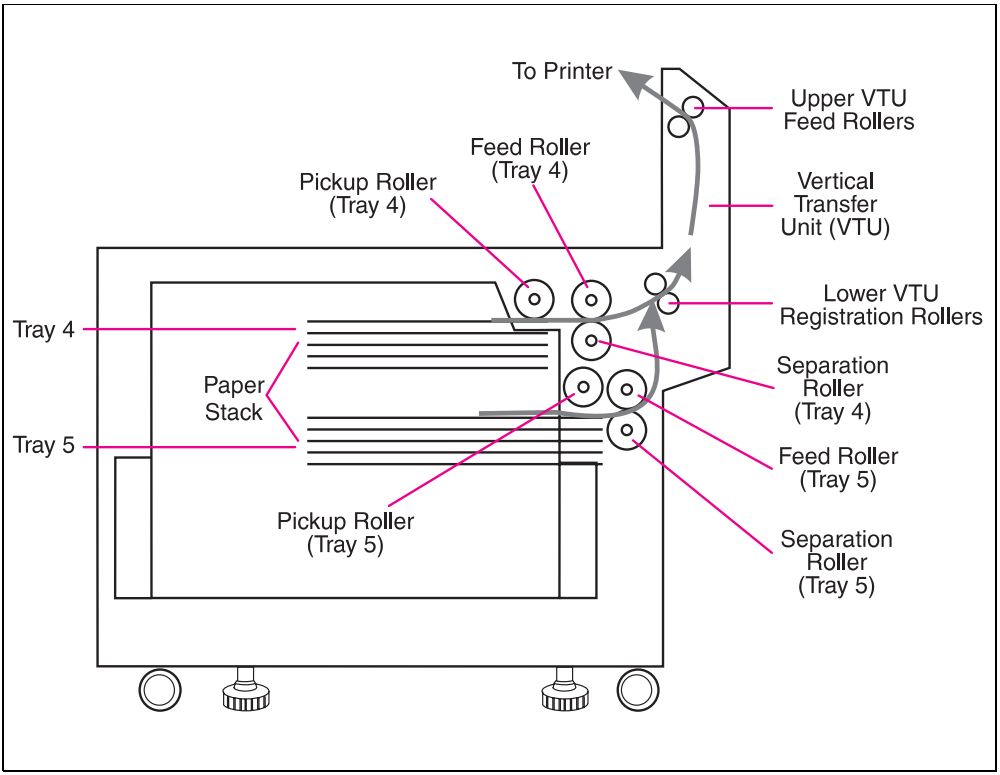

Figure 5-18 **2 x 500-sheet Input Tray Paper Path**

Download Service Manual And Resetter Printer at http://printer1.blogspot.com

Table 5-6. 2 x 500-sheet Input Tray Sensors, Switches, and Motors

Control Device	Title	Location
PS1203	Lower Cassette Paper Level Sensor 1	Pickup Assembly PCA
PS1204	Lower Cassette Paper Level Sensor 2	Pickup Assembly PCA
PS1201	Lower Cassette Sensor	Pickup Assembly PCA
PS 1208	Upper Cassette Paper Out Sensor	Pickup Assembly PCA
PS 1206	Upper Cassette Paper Level Sensor 2	Pickup Assembly PCA
PS 1205	Upper Cassette Paper Level Sensor 1	Pickup Assembly PCA
PS2	Paper Jam Sensor	Vertical Transfer Unit (VTU)
CL31	VTU Clutch	VTU
PS35	VTU Closed and Open Sensor	Pickup Assembly
SW1601-SW1604	Paper Size Switches	Back Lower Chassis
Power Supply Switch	Normal/Diagnostic Mode Switch	Power Supply
VTU Motor	Vertical Transfer Unit for entry and exit rollers	VTU

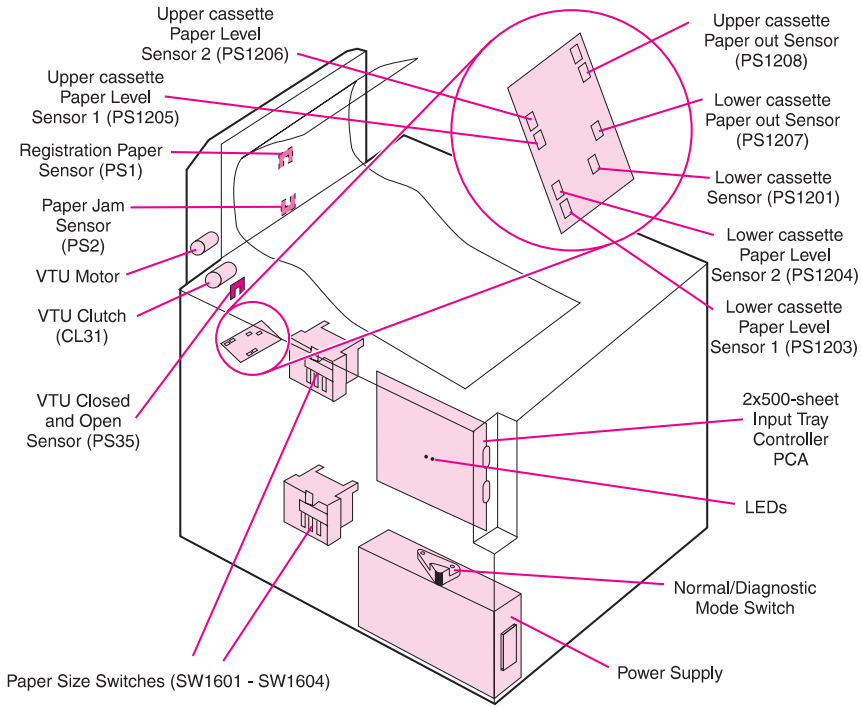

Figure 5-19 **2 x 500-sheet input Tray Sensors and Switches**

Download Service Manual And Resetter Printer at http://printer1.blogspot.com

2 x 500-sheet Input Tray Operation

Communication and control of the input device are made through the Paper Handling Controller by a sequence of instructions controlled into the 2 x 500-sheet Input Tray controller PCA.

Pickup and Feed System

When each tray in the 2 x 500-sheet Input Tray is loaded with paper and the paper tray is closed, the paper stack moves into position under the Pickup, Feed, and Separation Rollers. The trays are detected by the PS1202 sensor in the upper tray and by the PS1201 sensor in the lower tray. The presence of paper is detected in the upper paper tray by the PS1208 sensor, and in the lower tray by sensor PS1207. The paper level is detected by switches SW1205 and 1206 in the upper tray, and by switches SW1203 and 1204 in the lower tray. The paper size is detected by switches SW1601 through SW1604 installed in each tray.

Table 5-7. 2 x 500-sheet Input Tray Switches

Paper Size	SW1601	SW1602	SW1603	SW1604
Ledger (Portrait)	OFF	OFF	OFF	OFF
A3 (Portrait)	OFF	ON	OFF	OFF
B4 (Portrait	ON	OFF	OFF	OFF
Legal (Portrait)	ON	ON	OFF	OFF
Letter (Landscape)	OFF	OFF	OFF	ON
A4 (Landscape)	OFF	OFF	ON	OFF

When the Paper Handling Controller in the printer sends an input command to the Controller PCA on the 2 x 500-sheet Input Tray, the 2 x 500-sheet Input Tray driver engages the Pickup Motor to rotate the Pickup, Feed, and Separation Rollers. The direction of rotation of the Pickup motor determines which set of rollers are activated. When the motor rotates clockwise, the paper is picked up from the upper tray, and when the motor rotates counterclockwise, the paper is picked up from the lower tray.The 2 x 500-sheet Input Tray driver also engages the 2 x 500-sheet Input Tray motor to activate the Pickup Solenoid, which lowers the rollers to the level of the paper. As the Pickup Roller turns, the paper feeds into the Vertical Transfer Unit (VTU) and passes through the PS1 and PS2 sensors.

Download Service Manual And Resetter Printer at http://printer1.blogspot.com

If the paper fails to reach the PS1 and PS2 sensors in the VTU within the allotted time, the Controller PCA on the 2 x 500-sheet Input Tray assumes that a paper jam has occurred. The 2 x 500-sheet Input Tray stops the operation and reports the paper jam to the Paper Handling Controller on the printer. A paper jam message appears on the printer control panel display.

Hardware malfunctions are also displayed on the printer control panel.

Lifter Operation

The 2 x 500-sheet Input Tray drive motor lifts the paper when a tray is installed and when the pickup roller is lowered as a result of a partially filled tray.

When a tray is installed, the Paper Pickup Solenoid SL3 is turned on. The movements of the shaft drive arm and the lift-up release arm free the lift-up cam. This advances the lifter gear one tooth at a time, raising the lifting plate. When the paper on the lifting plate engages the pickup roller, the lift-up cam is stopped from rotating, and the lifting operation is completed.

When the paper falls below a set level, the actions are the same to lift the plate, except the position of the pickup roller (which is lowered as paper is used) triggers the lift-up release arm to free the lift-up cam, advancing the lifter gear. The lifting operation terminates the same way in both cases, triggered by contact between the paper in the tray and the pickup roller.

Power Supply

The 2 x 500-sheet Input Tray has an internal power supply activated when the printer power switch has been turned on. The Paper Handling Controller sends a power-on signal to the power supply through the 2 x 500-sheet Input Tray controller. When the signal is high, the power supply provides +24V and +5V to the paper deck driver. The +24V is used to drive the lifter, Feed, Pickup motors, clutches, and solenoids; +5V drives sensors and PCA electronics.

Download Service Manual And Resetter Printer at http://printer1.blogspot.com

7-bin Tabletop Mailbox Components

Components of the 7-bin Tabletop Mailbox paper path, including mailbox sensors, switches and motors, are illustrated in figure 5-20 and figure 5-21 and described in table below.

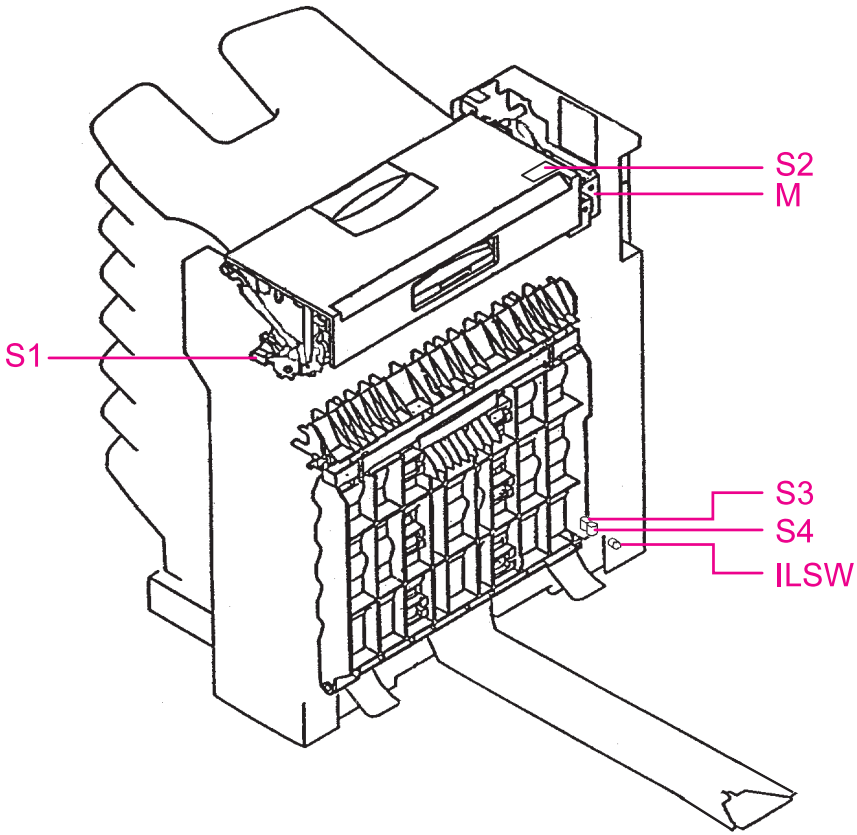

Figure 5-20 **7-bin Tabletop Mailbox Components (1 of 2)**

Download Service Manual And Resetter Printer at http://printer1.blogspot.com

Table 5-8. 7-bin Tabletop Mailbox Sensors, Switches, and Motors

Control Device	Title	Location
M	Motor	Upper back side
S1	Face-up/down Diverter Solenoid	Upper front side
S2	Reversing mechanism solenoid	Right side of the motor
S3	Diverters solenoid (bins 1, 3, and 5)	Bottom back side
S4	Diverters solenoid (bins 2, 4, and 6)	Bottom back side
BES1 to 7	Bin empty sensors (1 to 7)	Surface of every Face-down Bin
BFS1 to 7	Bin full sensors (1 to 7)	Upper left side of every Face-down Bin entrance
FUBFS	Face-up Bin full sensor	Upper center of the Face-up Bin entrance
ES	Paper entry sensor	Paper entrance
FUDS	Face-up Delivery Sensor	Rev. assembly. (top cover)
PPS1	Paper path sensor 1	Inside the unit, down the entry rollers.
PPS2	Paper path sensor 2	Paper path (right cover)
ILSW	Interlock switch	Bottom right side

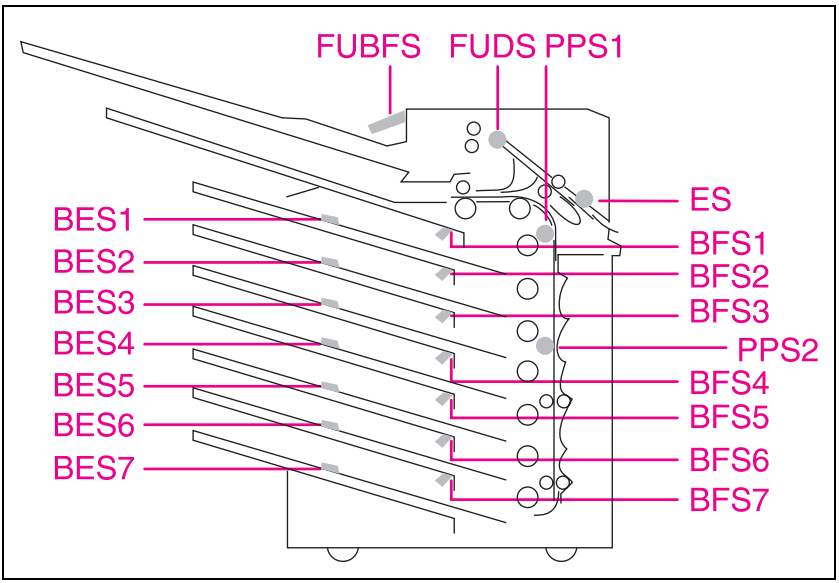

Figure 5-21 **7-bin Tabletop Mailbox Components (2 of 2)**

Download Service Manual And Resetter Printer at http://printer1.blogspot.com

7-bin Tabletop Mailbox Operation

The 7-bin Tabletop Mailbox (MBM-7) is a low cost output device designed to support different printer platforms at variable engine input speeds and to increase office productivity. The mailbox has a total capacity of 940 sheets distributed in 7x120 Face-down bins and a 1x100 Face-up Bin, and works with four intelligent and configurable operating modes.

An additional optional product, the Stand for the 7-bin Tabletop Mailbox, allows the customer to attach the mailbox in a floor stand configuration when an input device is attached to the printer.

Power-on Sequence

During the power-on sequence, the mailbox runs an initialization routine. The motor will perform a complete cycle and solenoid S2, S3, and S4 will be activated in that order. At the end of this routine, the front cover LED will display a fixed green light, but if there is a problem, the LED will flash red.

The information from the paper handling controller is carried by the C-link cables that connect the controller board for all of the C-link protocol-supported devices. The C-link protocol supports up to 5 devices connected to the paper handling controller in a Daisy Chain. Each device controller has an input and output port that provides them the flexibility of connection in different configurations. However, HP recommends using the configuration shown in figure 5-28 on page 147 to avoid rearrangements in the supported device numbering and confusion when evaluating the event log.

Receiving Paper

The engine delivers paper to the mailbox through the Face-up Delivery Slot (input paper guide) at 107 mm/sec. The entry sensor (ES) senses paper arrival, and then the Face-up/down Diverter Solenoid actuates only if the paper is going to the Face-up Bin. If the paper has to reach any Face-down Bin, this solenoid will not actuate and the paper will go into the reversing area.

Delivering Paper

If the paper is going to the Face-up Bin, the Face-up Delivery Sensor (FUDS) waits for the paper to reach the Face-up Bin. When the bin is full, the paper will actuate the Face-up Bin full sensor (FUBFS).

If the paper is sent to any of the Face-down bins, the reversing mechanism will be activated by the reversing mechanism solenoid (S2). The paper path sensor 1 (PPS1) will wait for paper, and the

Download Service Manual And Resetter Printer at http://printer1.blogspot.com

correct diverter solenoid will actuate to deliver the paper in the correct bin (S3 if the paper is going to bin numbers 1 through 3 or S4 for bin number 2).

If the paper has to reach other bins, then the paper path sensor 2 (PPS2) will be waiting for it. In the same way, S3 will be activated if the paper final destination is bin number 5, and if not, then S4 will be activated to reach bins 4 through 6. Finally, if the paper destination is bin number 7, none of the solenoids will be actuated. When a specific bin is full, then the paper will actuate the corresponding Face-down Bin full sensor (BFS1 to 7). The unit can report an empty bin condition to the engine based on the empty bin sensors (BES1 to 7).

Configuring the Operating Modes

The network administrator chooses the mode of operation through an HP network configuration utility, such as HP JetAdmin or HP LaserJet utility. You must set up your printer driver to reflect the mode chosen by the administrator.

Bidirectional environment: The printer automatically selects the mode established by the network administrator.

Unidirectional environment: The mode of operation can be changed in the driver. The method for changing the mode varies with the driver and type of operating system. For additional information, see the online help for the printer software.

Configurable Mailbox Mode (Default Configuration)

In this mode, each bin can be addressed individually as the output destination and can have a name assigned to it by the network or mopier administrator. All the jobs are placed in the Face-down bins. If the assigned bins are full, the printer halts or sends the next pages to the overflow bin, as defined by the MIS manager.

Job Separator Mode

This mode automatically separates incoming jobs and assigns a bin to each job, which may include multiple copies. It uses all mailbox bins for this purpose, starting at the first Face-down Bin (at top), but is seen in the mopier software as one logical bin. If a mailbox bin is full, the mopier automatically sends the job to the next available bin or the overflow bin. If there are more jobs than bins, the following job will start again at the first available Face-down Bin from the top.

Download Service Manual And Resetter Printer at http://printer1.blogspot.com

Configurable Stacker Mode

This mode stacks the printed output from the lowest bin to the top, regardless of job boundaries. This mode of operation takes advantage of the total capacity of the mailbox bins. The software sees the mailbox as one logical bin. When the mailbox is full, the system will halt until all bins are emptied.

Collator Mode

In this mode, the mailbox automatically separates mopies. Each mopy is delivered in consecutive bins, starting from the top Face-down Bin. In this case, one job contains several mopies.

Download Service Manual And Resetter Printer at http://printer1.blogspot.com

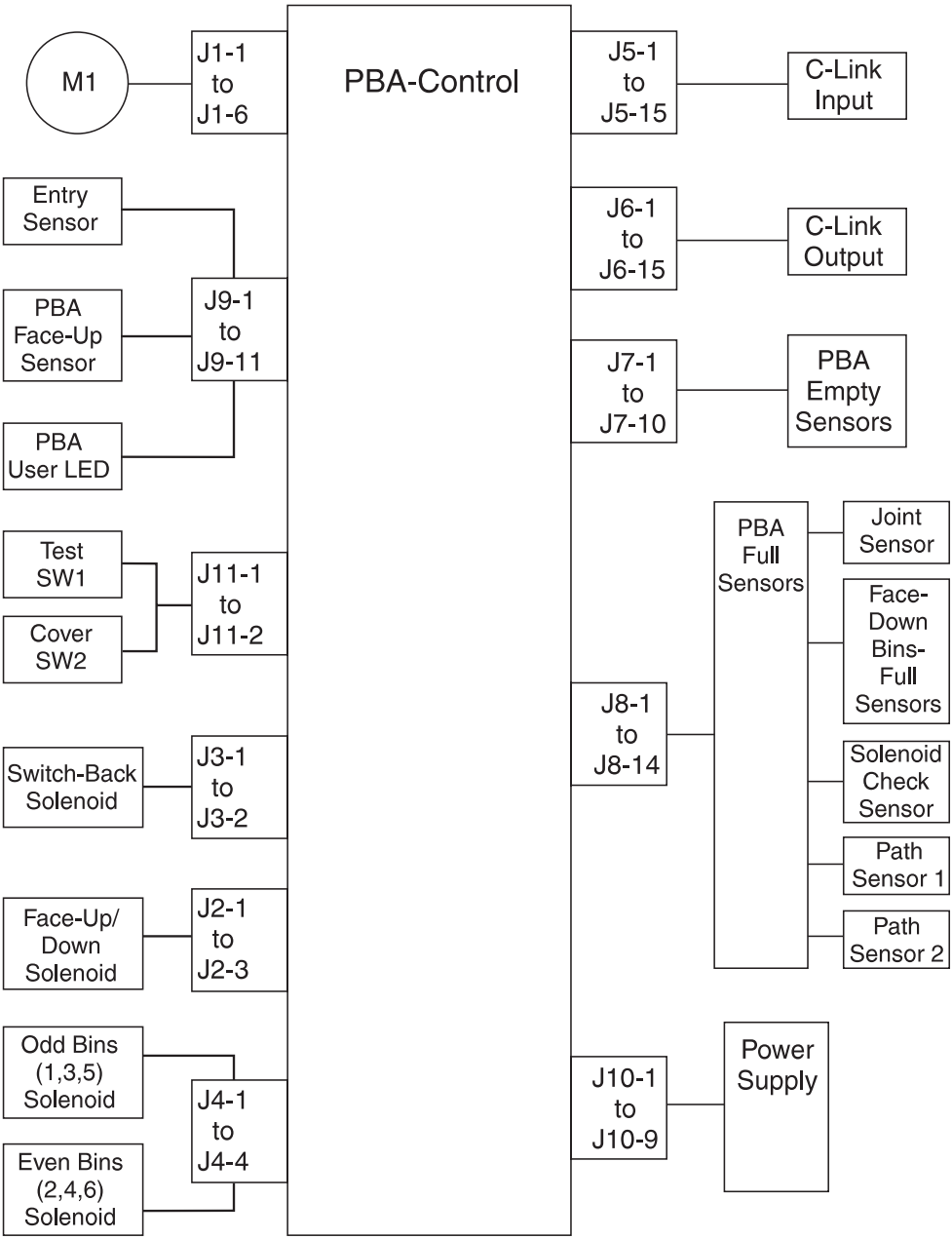

Figure 5-22 **7-bin Tabletop Mailbox Block Diagram**

Download Service Manual And Resetter Printer at http://printer1.blogspot.com

8-bin Mailbox Components

The 8-bin Mailbox (MBM) is an output unit designed for variable speeds, ranging from 6 to 32 ppm. The 8-bin Mailbox holds up to 2,100 sheets distributed in eight 250-sheet Face-down bins and one 100-sheet Face-up Bin. The 8-bin Mailbox also features four intelligent and configurable operating modes.Table 5-9 and figure 5-24 illustrate and describe the 8-bin Mailbox sensors, switches, motors, and Controller PCA. Figure 5-23 illustrates the components of the 8-bin Mailbox paper path.

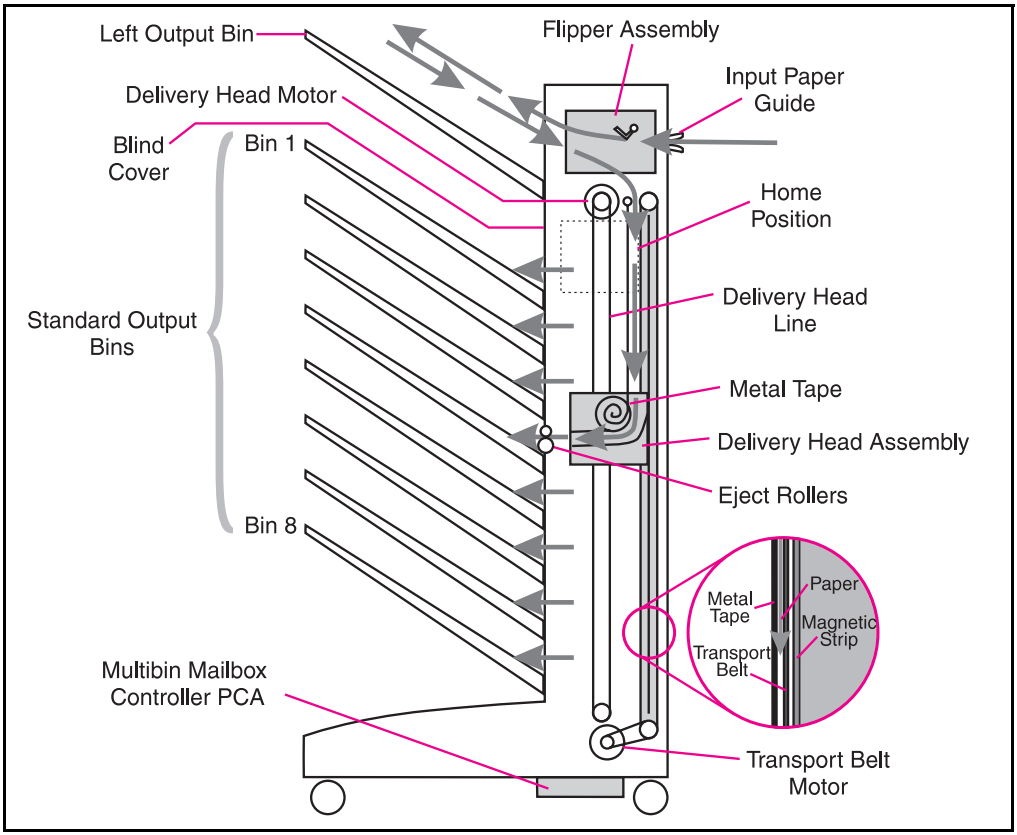

Figure 5-23 **8-bin Mailbox Paper Path**

Download Service Manual And Resetter Printer at http://printer1.blogspot.com

Table 5-9. 8-bin Mailbox Sensors, Switches, Motors, and Controller PCA

Control Device	Description	Location
M1	Delivery Head Motor	Upper-back side
M2	Flipper Roller Motor with Encoder	Flipper Assembly (upper back)
M3	Delivery Head Roller Motor	Delivery Head Assembly (upper back)
M4	Ejector Motor	Under Delivery Head Assembly
M5	Transport Belt Motor	Lower-back side
PSBinEmpty	Paper Bin Empty Sensor	Delivery Head Assembly (upper back)
PSBinFull/ Head Position	Paper Bin (below) Full Sensor	Delivery Head Assembly (upper back)
PSEject	Delivery Rollers Extended Sensor	Delivery Head Assembly (upper back)
PSEntry	Paper Entry Sensor	Flipper Assembly (top, center)
PSExit1	Paper Delivered to Head Sensor	Delivery Head Assembly (upper back)
PSExit2	Paper Delivered to Bin Sensor	Delivery Head Assembly (upper back)
PSFaceUp	Reverse Stepper Motor Sensor	Flipper Assembly (top, center)
PSFaceFull	Face-up Bin Full Sensor	Flipper Assembly (top, center)
SW1	Interlock Switch	Middle-back Side
IR LED	Infrared Light-emitting Diode (for Stapler Assembly)	Delivery Head Assembly (left, center)

Download Service Manual And Resetter Printer at http://printer1.blogspot.com

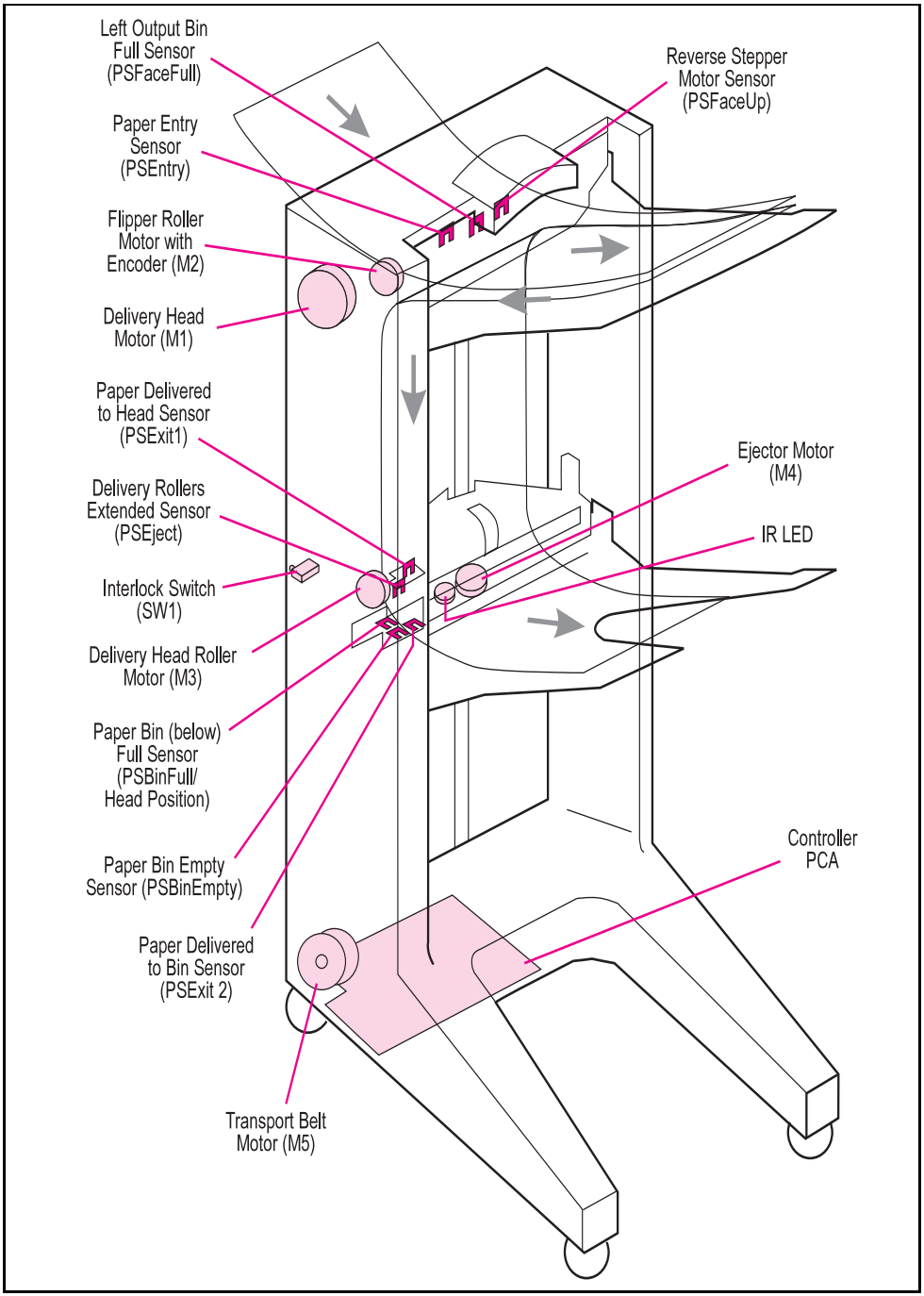

Figure 5-24 **8-bin Mailbox Sensors, Switches, Motors, and Controller PCA**

Download Service Manual And Resetter Printer at http://printer1.blogspot.com

8-bin Mailbox Operation

Power-on Sequence

During the power-on sequence, the Delivery Head Assembly moves first to the top “home” position at the Face-up Bin. From that position the delivery head moves down, scanning to determine if all the Mailbox bins are installed, if they contain paper, and if they are full. Then the Delivery Head proceeds upward again to the home position and remains there for about 7 seconds. Finally, the Delivery Head Assembly moves to the bottom bin, where it waits for the next command from the Paper Handling Controller.

Note If one of the bins has been removed or is not seated correctly, the Delivery Head Assembly will not complete the scan and will send an error message to the printer control panel.

Receiving Paper

The printer delivers paper to the 8-bin Mailbox through the left output delivery slot (Input Paper Guide) at a rate of 107 mm per second. Paper arrival is sensed by the PSEntry sensor, which activates the Flipper Roller Motor (M2), causing the paper to move through the 8-bin Mailbox transport and delivery system. See figure 5-23 on page 136.

Delivering Paper

The Delivery Head Assembly on the 8-bin Mailbox moves or stays in the indicated bin according to the commands coming from the Paper Handling Controller on the printer. If paper is designated for the Face-up Bin, the 8-bin Mailbox feeds it through the Flipper Assembly. If paper is designated for one of the Face-down bins, the 8-bin Mailbox feeds it through the Flipper Assembly until the trailing edge is sensed by the PSFaceUp sensor. Then the Flipper Roller Motor (M2) reverses and feeds the paper down between the Transport Belt and the Metal Tape until it reaches the Delivery Head Assembly.

Configuring the Operating Modes

The network administrator chooses the mode of operation through an HP network configuration utility, such as the HP JetAdmin utility or the HP LaserJet utility for the Macintosh. Additionally, on all workstations that print to the printer, the printer driver might need to be set up to reflect the chosen operating mode.

Download Service Manual And Resetter Printer at http://printer1.blogspot.com

Mailbox Mode

In Mailbox Mode, the network administrator can address each bin as an output destination with a name assigned to it. The printer sends a print job to the selected bin. If the assigned bin is full, the printer either stops printing or sends subsequent pages to the overflow bin, which is also defined by the network administrator.

Job Separator Mode

In Job Separator Mode, each print job is placed in a separate bin. All bins are used for this purpose, starting with the first Face-down Bin (at the top). The head assembly moves up and down looking for the next empty bin, then starts delivering the next job. If a bin is full, the printer automatically sends the job to the next available bin. If there are more jobs than empty bins, the extra jobs will start again at the top Face-down Bin.

This process is seen by the printer software as one logical bin.

Virtual Stacker Mode

In Virtual Stacker Mode, printed sheets are stacked face down in the bins from the lowest bin to the top bin, regardless of where a print job begins or ends. All printed sheets are sent to the bottom bin until it is full; subsequent sheets are sent to the next upward bin until it is full. This mode of operation takes advantage of the total capacity of the Mailbox bins.

In this mode, the software sees the Mailbox as one logical bin. When the Mailbox is full, the printer stops sending paper until all the bins are emptied.

Collator Mode

Each mopy (copy) of a single job is sent to a different bin (next bin down). This mode separates mopies automatically.

Mopies are delivered in consecutive bins, starting at the face-down (top output) bin. If the size of a single mopy exceeds the capacity of the bin, a bin-full condition is created. The system will stop until the bin-full condition is cleared (until the sheets are removed from the bin).

Download Service Manual And Resetter Printer at http://printer1.blogspot.com

Finisher Components

The 5-bin Mailbox with Stapler is an output-Finisher paper-handling device designed to work with different HP LaserJet printers. It has both mailbox and stapling capability. The stapler unit output bin staples up to 20 sheets (letter and A4,)20-lb paper), and has a total capacity of 350 stapled sheets.

In addition, this component has 5 Face-down bins with a capacity of 250 sheets each, and 1 Face-up Bin with a capacity of 100 sheets, for a total capacity of 1350 non-stapled sheets. The 8-bin Mailbox and the 5-bin Mailbox with Stapler have similar functionality, performance, and parts. The stapler fits into the Mailbox by removing the three upper bins and the blind cover (see figure 8-12 on page 536 for location of the blind cover).

Download Service Manual And Resetter Printer at http://printer1.blogspot.com

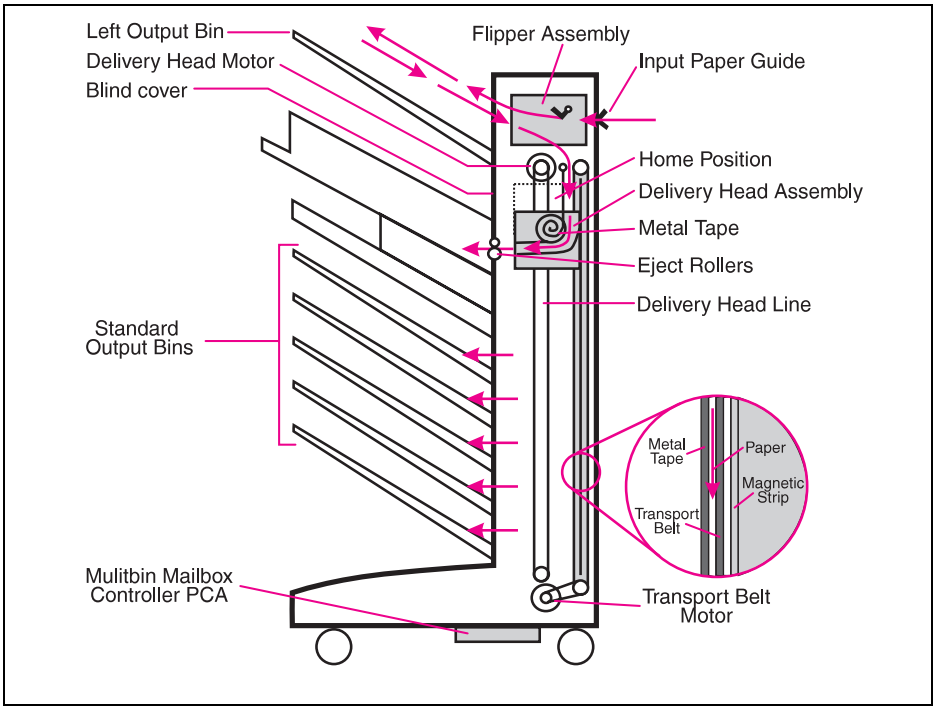

Figure 5-25 **Finisher Paper Path**

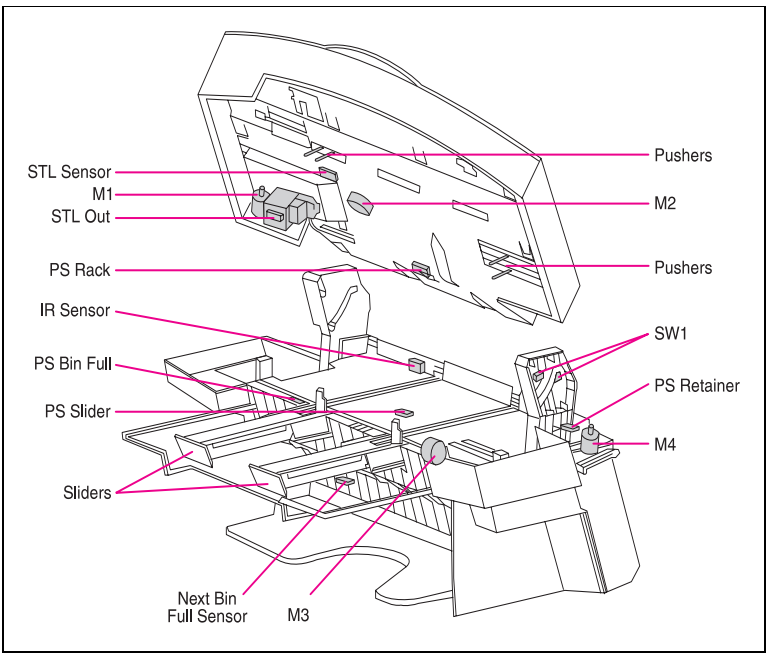

Figure 5-26 **Stapler Motors, Sensors, and Switches**

Download Service Manual And Resetter Printer at http://printer1.blogspot.com

Stapler Unit Operation

All communication and control of the mailbox, the 2000-sheet Input Tray, and the stapler unit is through the Paper Handling Controller. These instructions are sent to the stapler controller PCA located in the lower part of the stapler. Power is provided to the stapler by the 8-bin Mailbox/5-bin mailbox with Stapler external 24V DC power supply through the C-link cable. It handles letter and A4 sizes of plain paper. The stapler can staple up to a maximum of 20 sheets.

Table 5-10. Stapler Motors, Sensors, and Switches

Control Device	Title	Location
M1	Stapler DC Motor	Stapler Assembly
M2	Rack Stepper Motor	Top Cover Assembly
M3	Slider Stepper Motor	Top Cover Assembly
M4	Retainer DC Motor	Stapler bed Assembly
IR Sensor	Infra Red Sensor	Stapler bed Assembly
STL Sensor	Stapler Sensor	Stapler Assembly
PSRack	Rack Sensor	Top Cover Assembly
PSSlider	Slider Sensor	Stapler bed Assembly
PSRetainer	Retainer Sensor	Stapler bed Assembly
PSBinFull	Output Bin Full Sensor	Stapler bed Assembly
PSNBinFull	Next Bin Full Sensor	Housing
STLout	Staples Out	Stapler Assembly
SW1	Top Cover Interlock Switches (2 in serial)	Right Hinge

Download Service Manual And Resetter Printer at http://printer1.blogspot.com

Power-On or Reset Sequence

At power-on or reset, events are performed in the following sequence:

1. Stapler Assembly is set to a ready state.
2. Retainer Assembly is turned to its initial position.
3. Rack Assembly is moved to find its home position, which is in the left side of the Top Cover Assembly.
4. Slider Assembly is moved to find its home position, which is inside of the stapler bed.
5. Slider Assembly is moved fully out from the stapler bed to the eject position.
6. Rack Assembly is moved to activate the Exit Flap Assembly.
7. Slider Assembly is moved to its home position.
8. Rack Assembly is returned to its home position.

Download Service Manual And Resetter Printer at http://printer1.blogspot.com

Main Functional Cycles of the Stapler (Internal Paper Path)

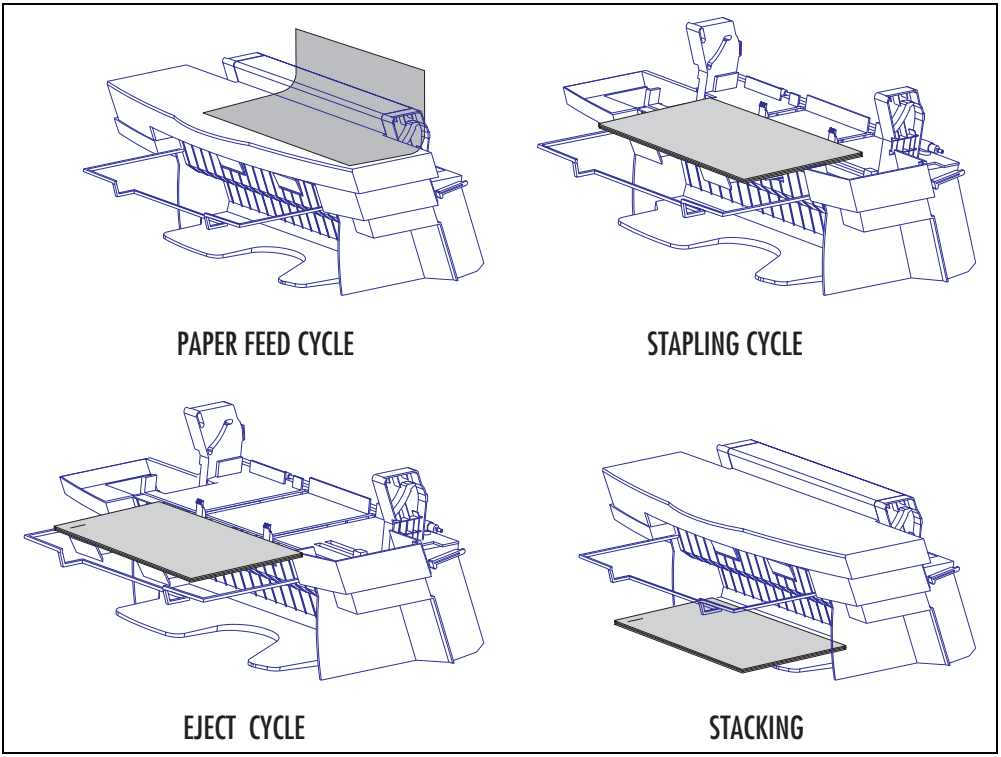

Figure 5-27 **Stapler Cycles**

Paper Feed Cycle

The stapler bed assembly receives the paper from the 8-bin Mailbox/ 5-bin Mailbox with Stapler Head assembly. The IR Sensor detects when the paper arrives in the stapler. The Retainer (a shaft holding two rubber flexible fingers or anti-curl fingers) rotates once to apply pressure down and backward. This action forces the paper to register against the rear wall of the stapler bed, as well as reduces paper curl. The Registration Pusher (located in the right side of the Top Assembly) registers the paper against the left wall of the stapler bed. This cycle is repeated until the amount of sheets to be stapled is reached (with a maximum of 20).

Download Service Manual And Resetter Printer at http://printer1.blogspot.com

Stapling Cycle

The Sliders move the stack of sheets to the stapling position. The Registration Pusher applies slight pressure to the stack of sheets toward the left wall of the stapler bed where the stapler is located. Then the stack of sheets is stapled.

Eject Cycle

The stapler bed sliders offset the stacks or jobs. The Off-Set Pusher (located in the left side of the Top Cover Assembly) pushes the stack towards the right side of the stapler bed, whenever it applies. The Sliders move the stack of paper from stapling position to eject position, which is out of the stapler bed (reaching the Wire Frame level). The Wire Frame directs the stack of paper. The Exit Flap Assembly moves down to prevent the job from returning to the stapler bed. The Sliders retract to home position, letting the stack of sheets fall into the output bin. The capacity of the output bin is 350 stapled sheets in jobs of five sheets or equivalent combinations.

Communication Link (Daisy Chain)

Communication Link (C-link) devices include:

- C-link Input Devices:
  - 2000-sheet Input Tray
  - 2 x 500-sheet Input Tray
- C-link Output Devices:
  - 8-bin Mailbox
  - 5-bin Mailbox with Stapler (Includes a Finisher)
  - 7-bin Tabletop Mailbox

Communication and control of the C-link devices is through the paper handling controller mounted on the printer's formatter PCA. The C-link devices (C-link protocol) have their own power supply and controller board that receives signals and commands from the paper handling controller. This communication is illustrated in figure 5-28.

Download Service Manual And Resetter Printer at http://printer1.blogspot.com

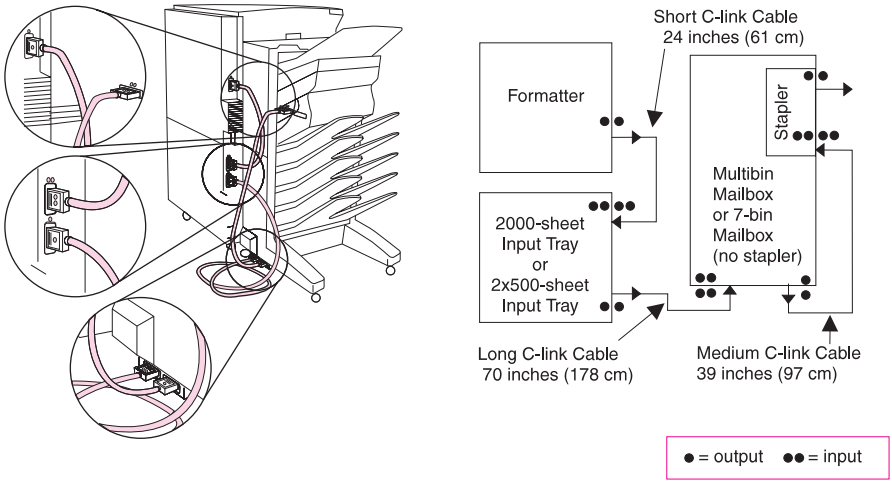

Figure 5-28 Recommended C-link Configuration (Daisy Chain)

Download Service Manual And Resetter Printer at http://printer1.blogspot.com

Paper Jam Detection

The PIU Sensor (PS2), the Registration Sensor (PS1), the Fuser Delivery Sensor (PS1403), and the Face-down Delivery Sensor (PS1402) detect paper moving through the printer (see figure 5-15 on page 118 and table 5-1 on page 117 for a description of each sensor and illustration of its locations). If a paper jam is detected, the DC Controller immediately stops the printing process and causes a `13.x PAPER JAM` message to be displayed on the control panel. If a paper jam occurs in the Envelope Feeder, Duplexer, 2000-sheet Input Tray, 8-bin Mailbox/5-bin Mailbox with Stapler, 2 x 500-sheet Input Tray, or 7-bin Tabletop Mailbox, the `13.x Paper Jam` message will indicate the approximate location. See Chapter 7 for more details.

Printer Timing

The Formatter PCA and the DC Controller PCA share information during printer operation. This information consists of printer status, command, and dot-image data. Figure 5-29 shows the general timing of the printer events. Table 5-11 lists the events that take place during normal printer operation.

Table 5-11. Printer Timing

Period	Timing	Purpose
WAIT	From power on to the end of Main Motor initial rotation.	Clear the drum surface potential and clean the Transfer Roller.
STBY (standby)	From the end of the WAIT or the LSTR period until the input of the PRNT signal from the Formatter PCA. Or from the end of the LSTR period to power off.	Maintain the printer in the READY state.
INTR (initial rotation)	From the input of the PRNT signal from the Formatter PCA until the laser diode intensity has been stabilized.	Stabilize the photosensitive drum sensitivity in preparation for printing. Clean the Transfer Roller.
PRNT (print)	From the end of the initial rotation until the Scanner Motor stops.	Form images on the photosensitive drum based on the /VDO signal from the Formatter PCA. Transfer the image to the media.
LSTR (last rotation)	From the primary voltage (DC) off until the Main Motor stops. If another PRNT signal is sent from the Formatter PCA, the printer returns to the INTR period. If not, it returns to the STBY period.	Deliver the last sheet of paper and clean the Transfer Roller.

Download Service Manual And Resetter Printer at http://printer1.blogspot.com

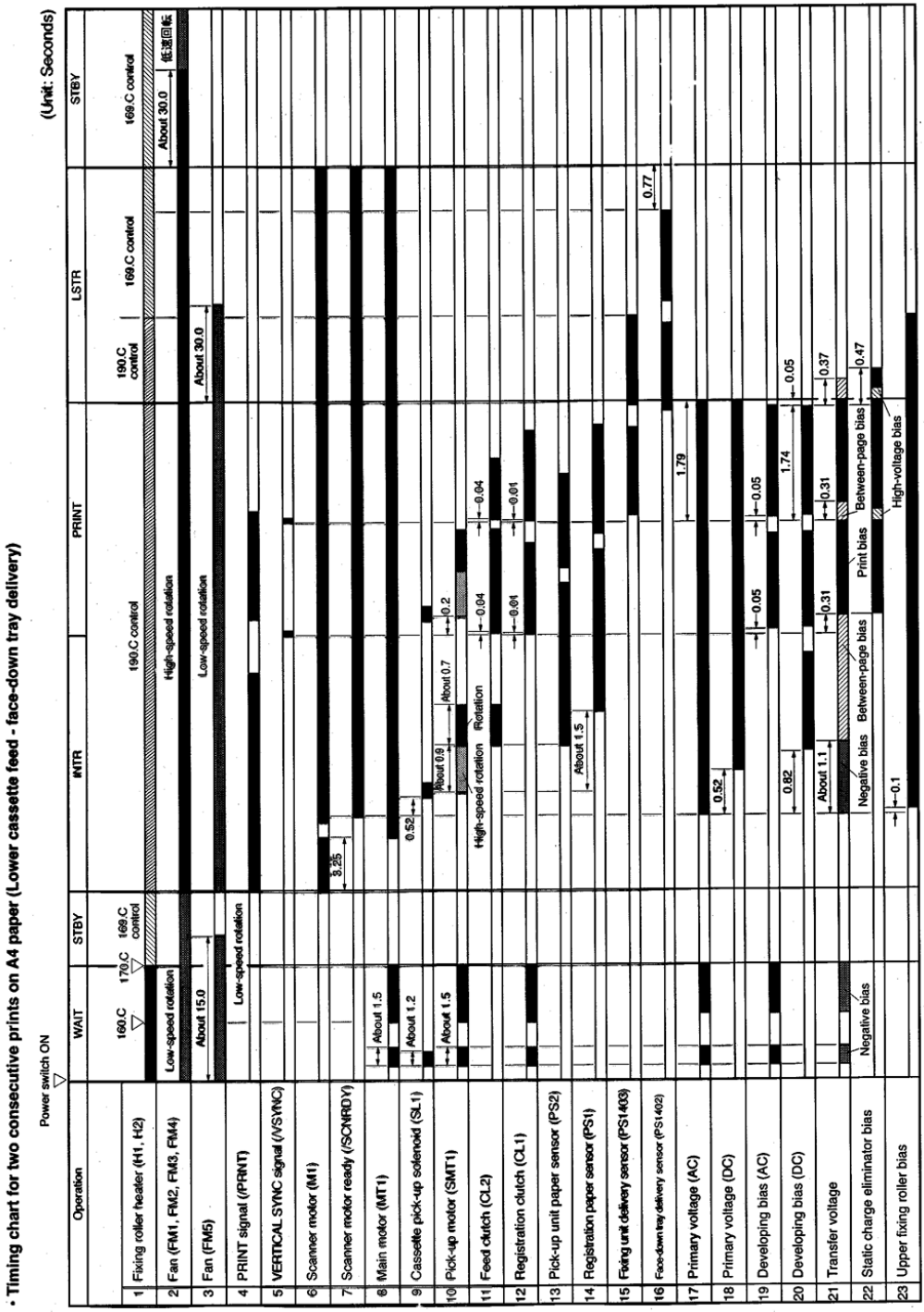

Figure 5-29 **General Timing Diagram**

Download Service Manual And Resetter Printer at http://printer1.blogspot.com

IEEE 1284 Parallel Cable Information

This cable is IEEE compliant with A-to-C connectors. To take advantage of its enhanced capabilities such as bidirectional communication between the computer and printer, faster transmission of data, and auto configuration of printer drivers, the customer must have the following:

- Support in software applications for these features.
- A parallel cable with the correct pin configuration (see figure 5-30).

Parallel Cable Pin Configuration

For best results, use the C2946A (3 meter) or C2947A (10 meter) cable or equivalent.

CAUTION Ensure that all power and interface cables on the printer and host computer are properly grounded in compliance with local codes.

Signal Name	Printer Pin #	IBM Port Pin #
nSTROBE	1	1
DATA 1	2	2
DATA 2	3	3
DATA 3	4	4
DATA 4	5	5
DATA 5	6	6
DATA 6	7	7
DATA 7	8	8
DATA 8	9	9
nACKNLG	10	10
BUSY	11	11
CALL (PE)	12	12
SELECT	13	13
nAutoFd	14	14
No Connect	15, 34	
O VDC (GND)	16, 19 THRU 30	18 THRU 25
nIP	31	
nFAULT	32	15
Vcc	33	
Vcc	35	

Figure 5-30 **Parallel Cable Pin Assignments (C2946A)**

Download Service Manual And Resetter Printer at http://printer1.blogspot.com

6 Removal and Replacement

Chapter contents

Removal and Replacement Strategy - - - - - - - - - - - 152
Required Tools - 153
User Installable Accessories - - - - - - - - - - - - - - - 154
Hardware Table - 162
Engine Removal and Replacement - - - - - - - - - - - - 164
Input Devices:
2000-sheet Input Tray Removal and Replacement - - - - 235
2 x 500-sheet Input Tray Removal and Replacement - - - 265
Envelope Feeder - 156
Output Devices:
7-bin Tabletop Mailbox Removal and Replacement - - - - 297
8-bin Mailbox Removal and Replacement - - - - - - - - - 334
Finishing Device:
Stapler Assembly Removal and Replacement - - - - - - - 366
Duplexer - 156

Download Service Manual And Resetter Printer at http://printer1.blogspot.com

Removal and Replacement Strategy

This chapter documents the removal and replacement of major assemblies.

Replacement is generally the reverse of removal. Occasionally, directions for difficult or critical replacement procedures are included.

WARNING!

Unplug the power cord from the power outlet before attempting to service the printer. If this warning is not followed, severe injury may result.

Never operate or service the printer with the protective cover removed from the Laser/Scanner assembly. The reflected beam, although invisible, can damage your eyes.

This printer has some sharp sheet metal edges that can cause injury.

CAUTION

The printer and accessories contain parts that are sensitive to electrostatic discharge (ESD). Always service printers at an ESD-protected workstation. Watch for the ESD reminder symbol on illustrations.

Download Service Manual And Resetter Printer at http://printer1.blogspot.com

Required Tools

- #2 magnetized Phillips screwdriver (6-inch shaft)
- Small flat-blade screwdriver
- Small pair needle-nose pliers
- T-10, T-15, and T-20 Torx driver (6-inch shaft)

All components in the printer, the 2000-sheet Input Tray, 7-bin Tabletop Mailbox, and the 2 x 500-sheet Input Tray use Phillips head screws that require a #2 size Phillips screwdriver. Make sure to use a Phillips screwdriver and not a Posidriv screwdriver. Figure 6-1 shows the difference between a Phillips and a Posidriv screwdriver. Note that the Phillips tip has more beveled surfaces.

All screws used in the field-replaceable units of the 8-bin Mailbox and the 5-bin Mailbox with Stapler components require a T-10, T-15 or T-20 Torx driver.

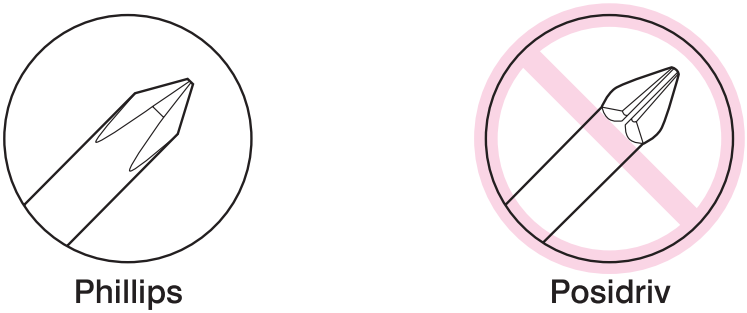

Figure 6-1 **Phillips vs. Posidriv Screwdrivers**

Note See table 6-1 on page 162 and Chapter 8 for a list of the screws and other common hardware used in the printer.

CAUTION To install a self-tapping screw, first turn it counter-clockwise to align it with the existing thread pattern, then carefully turn clockwise to tighten. Do not over-tighten. If a self-tapping screw-hold becomes stripped, repair of the screw-hole or replacement of the affected assembly is required.

Download Service Manual And Resetter Printer at http://printer1.blogspot.com

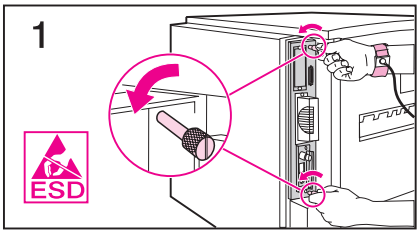

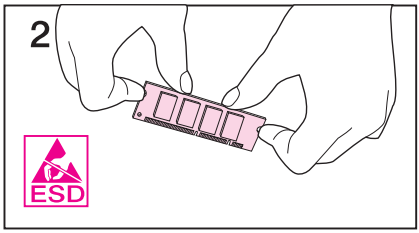

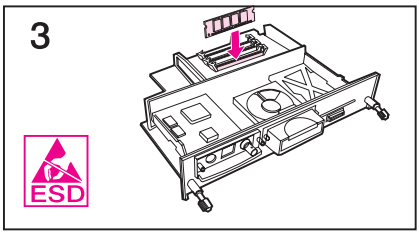

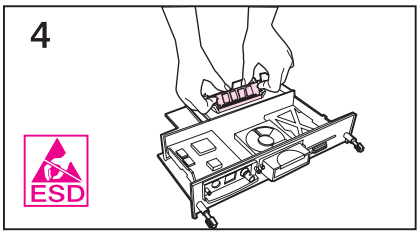

Memory and Personality Upgrade

CAUTION
DIMMs and the Formatter PCA can be damaged by small amounts of electrostatic discharge (ESD). Wear an anti-static wrist wrap.

Print a configuration page (page 468).

1 Turn the printer off. Unplug the power cord, and disconnect any cables.

Loosen the two captive thumb screws on the back of the printer. Grasp the screws and pull the formatter board out of the printer. Place it on a flat, non-conductive surface.

2 Remove the DIMM from the antistatic package. Hold the DIMM with fingers against the side edges and thumbs against the back edge. Align the notches on the DIMM with the DIMM slot. (Check that the locks on each side of the DIMM slot are open, or outward.)

3 Press the DIMM straight into the slot (press firmly).

4 Make sure the locks on each side of the DIMM snap inward into place. (To remove a DIMM, the locks must be released.)

Slide the formatter board back into the printer, and tighten the two screws. Plug in the power cord and connect all cables. Turn the printer on.

Download Service Manual And Resetter Printer at http://printer1.blogspot.com

Disk Drive

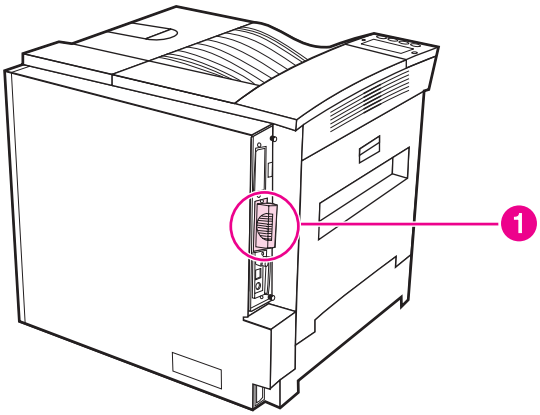

Figure 6-2 **Disk Drive**

To remove the disk drive:

1. Turn the printer off, and unplug it.
2. Loosen the 2 captive screws, and remove the disk drive from slot #2 (figure 6-2, callout 1).

To reinstall the disk drive:

1. Turn the printer off.
2. Install the disk drive in slot #2 (figure 6-2, callout 1), and tighten the 2 captive screws.
3. Print a configuration page to verify the settings.

Download Service Manual And Resetter Printer at http://printer1.blogspot.com

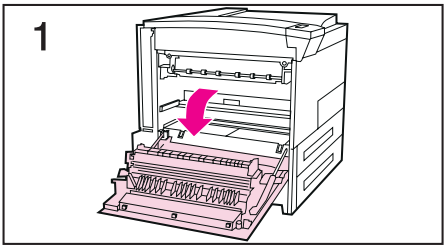

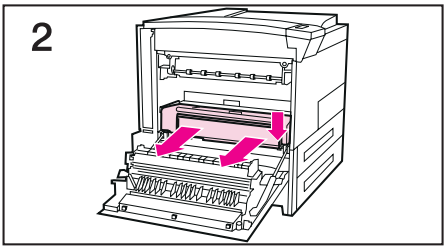

Duplexer

1 With the printer turned off and unplugged, open the Diverter door on the left side of the printer.

2 Push down the green release lever located at the lower right of the Duplexer and slide it straight out of the printer.

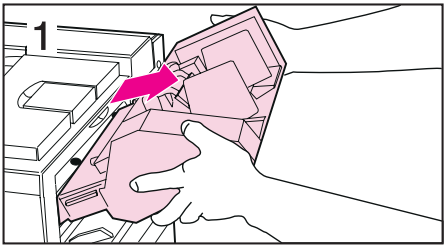

Envelope Feeder

1 With the printer turned off and unplugged, slide the Envelope Feeder up and out of the printer.

Download Service Manual And Resetter Printer at http://printer1.blogspot.com

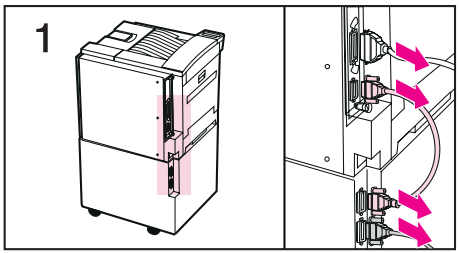

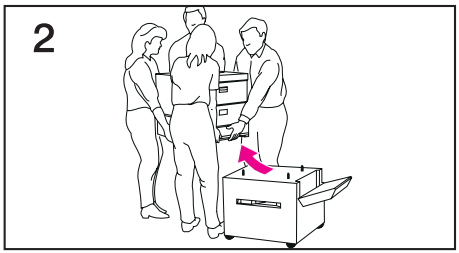

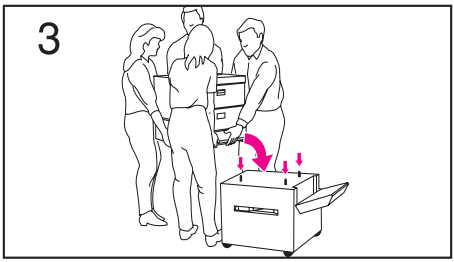

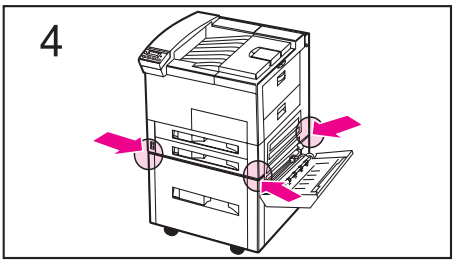

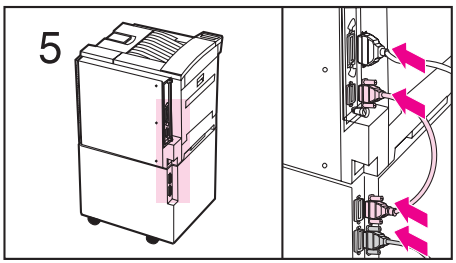

2000-sheet or 2 x 500-sheet Input Tray

1 With the printer turned off and the power cable unplugged, disconnect all C-link cables from the Formatter Assembly and from the input device.

WARNING!
The printer weighs approximately 106 pounds (48 kg). Use four people to lift it.

2 Lift the printer off of the Tray 4 assembly and place it on a smooth, sturdy surface.

To Reinstall:

3 Match the locator pins as illustrated in step 3.

4 Make sure that the printer is aligned on all corners.

5 Reconnect all power and C-link cables.

Download Service Manual And Resetter Printer at http://printer1.blogspot.com

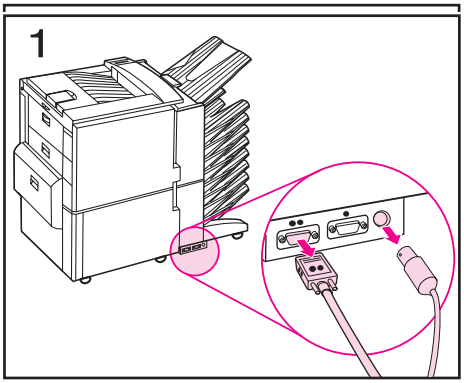

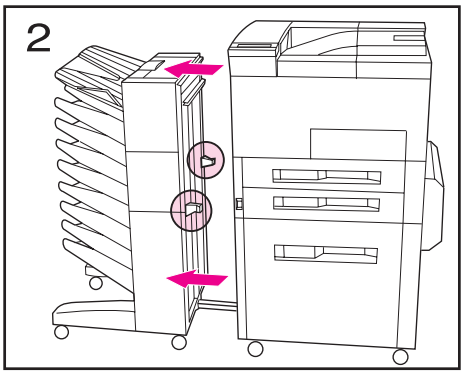

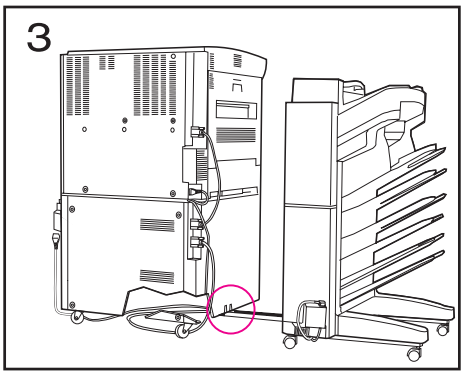

8-bin Mailbox/5-bin Mailbox with Stapler

1. With the printer turned off and unplugged, disconnect the power cable and C-link cable from the input device and power box.
2. Carefully slide the 8-bin Mailbox/5-bin Mailbox with Stapler away from the printer until the locator tabs and the lower guide rail are clear. See Figure 2.
3. Press in the green tabs and remove the bracket installed underneath the input device. See Figure 3.

To Reinstall:

1. Reinstall bracket underneath input device.Reinstall C-link and power cables. See Figure 1.

Note

Attach and secure the C-link cable to the lower connector on the input device.

Route the mailbox's power cord beneath the printer to the transfer-door side of the printer and connect it to the bottom of the powerbox.

Download Service Manual And Resetter Printer at http://printer1.blogspot.com

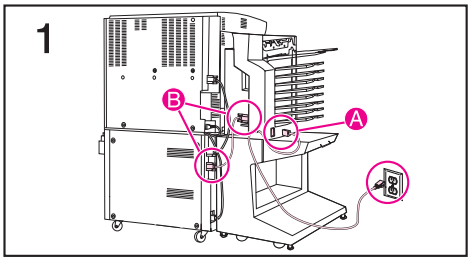

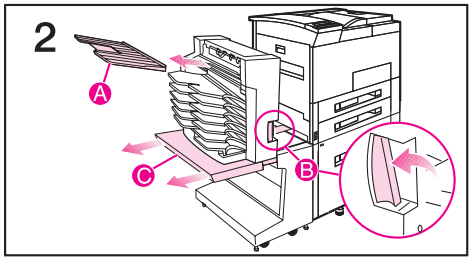

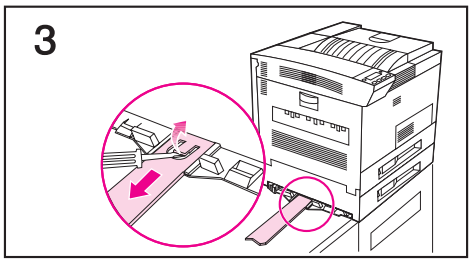

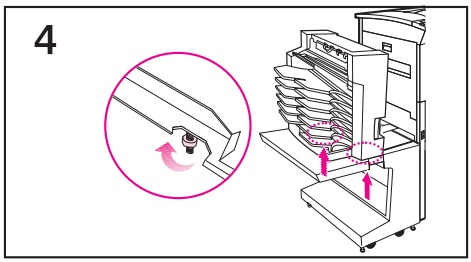

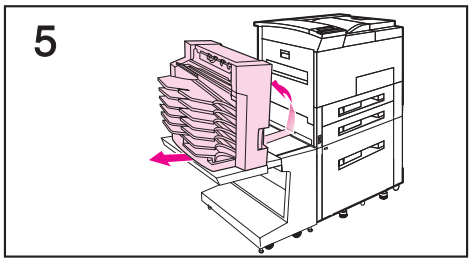

7-bin Tabletop Mailbox

1. With the printer turned off and unplugged (A), disconnect the C-link cable from the top and bottom (B) connectors.
2. Remove the Face-up Bin (A) from the top slot of the mailbox. Depress the handle mechanism on the front of the mailbox (B). Pull the mailbox away from the printer until the tray is fully extended (C).
3. Release the plastic alignment guide from the latching mechanism.
4. Remove the wingnuts from the studs beneath the tray extension on the stand.
5. Slide the mailbox away from the printer. Raise the alignment guide and tape it in place before moving the mailbox.

Download Service Manual And Resetter Printer at http://printer1.blogspot.com

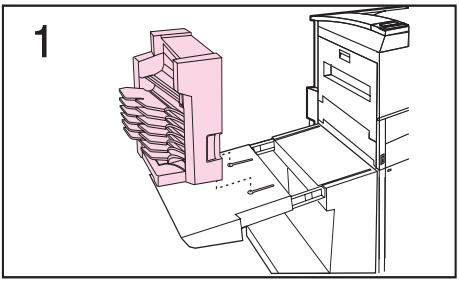

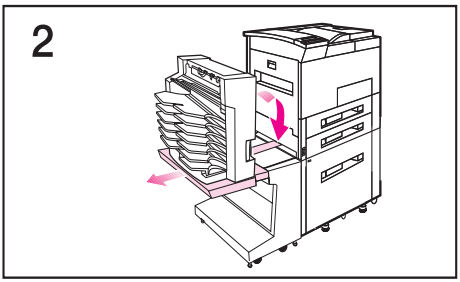

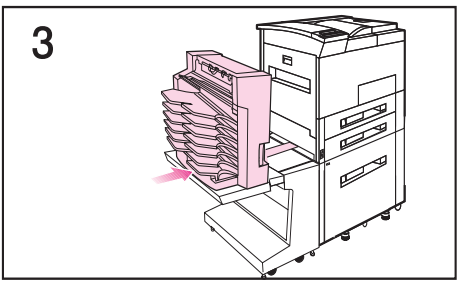

To Reinstall:

1. Place the mailbox onto the stand by aligning the threaded studs on the connector plate with the two holes on the top of the stand.
2. With the tray on the stand fully extended, lower the alignment guide onto the locking mechanism.
3. Slide the mailbox toward the printer.

Note
Use your thumbs to do this and keep the tray on the stand fully extended.

Download Service Manual And Resetter Printer at http://printer1.blogspot.com

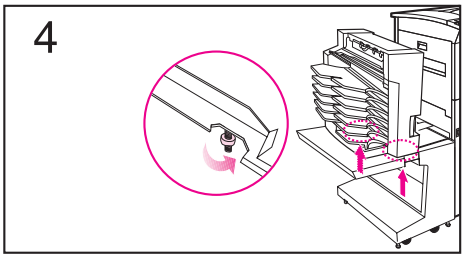

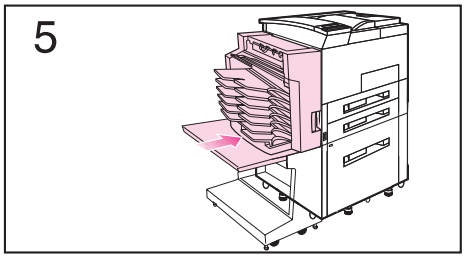

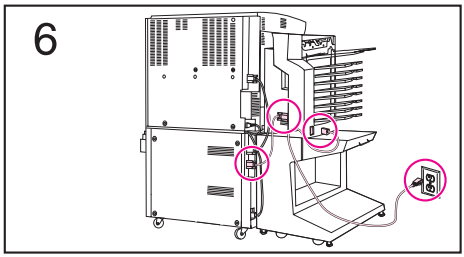

4 Secure the mailbox to the stand by tightening the thumb fastener onto the studs beneath the tray extension on the stand.

5 Push the mailbox toward the printer until it snaps in place.

6 Connect the C-Link cable. Plug the power cord into the mailbox and an AC power outlet.

Download Service Manual And Resetter Printer at http://printer1.blogspot.com

Hardware Table

Note The screws listed in table 6-1 are also listed in Chapter 8 with their respective assemblies.

Table 6-1. Hardware Table

Example	Reference	Description	Part Number	Usage
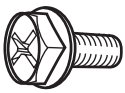	CH101 and CH102	Screw, w/washer, M3x8	XA9-0872-000CN	General, Metal to metal
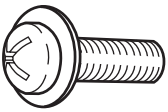	CH103	Screw, M4X8	XB6-7400-807CN	Main Motor
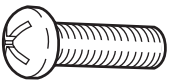	CH104	Screw, CT, M3X3	XB5-6303-007CN	Fan 1, Fan 2
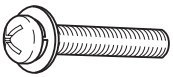	CH105	Screw, w/washer, M3X20	XA9-0817-000CN	Laser/Scanner
	CH106	Screw, tapping, truss head, M3X8	XB4-7401-809CN	HVPS, DC Controller
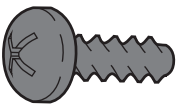	CH107	Screw, tapping, pan head, M4X10	XB4-7401-009CN	Diverter Assembly, Face-up Solenoid Assembly

Download Service Manual And Resetter Printer at http://printer1.blogspot.com

Table 6-1. Hardware Table (continued)

Example	Reference	Description	Part Number	Usage
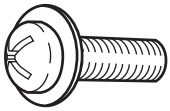	Kit 1	Complete hardware screw kit for 2000-sheet Input Tray	RY7-5044-000CN	2000-sheet Input Tray, general use
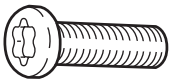	Kit 3	Complete hardware screw kit for Mailbox	C4785-60521	8-bin Mailbox/5-bin Mailbox with Stapler, Elevator Head

Download Service Manual And Resetter Printer at http://printer1.blogspot.com

Engine Removal and Replacement

Control Panel - 165
Covers - 167
Delivery Unit (for Face-down Bin) - - - - - - - - - - - - - - 176
Diverter Assembly - 179
Diverter Door Assembly - - - - - - - - - - - - - - - - - - - 180
Lower Right Door Assembly - - - - - - - - - - - - - - - - - 181
Fan 1, Laser/Scanner and Housing (Exhaust) - - - - - - - - 184
Fan 2, Low Voltage Power Supply (Exhaust)- - - - - - - - 186
Fan 3, Formatter Fan and Housing (Intake) - - - - - - - - 187
Fan 4, Delivery Unit (Exhaust) - - - - - - - - - - - - - - - 188
Fan 5, Tray 1 (Intake) - - - - - - - - - - - - - - - - - - - 189
Tray 1 - 191
Tray 1 Pickup Assembly- - - - - - - - - - - - - - - - - - - 194
Feeder Assembly - 198
Formatter Assembly - 200
Fusing Assembly - 202
Laser/Scanner Assembly - - - - - - - - - - - - - - - - - - 204
Main Gear Assembly - 206
Main Motor Assembly- 209
Paper Input Unit (PIU) - - - - - - - - - - - - - - - - - - - 210
PCA, DC Controller- 211
Output Paper Sensor PCA - - - - - - - - - - - - - - - - - - 212
High Voltage Power Supply (HVPS) - - - - - - - - - - - - - 219
Low Voltage Power Supply (LVPS) - - - - - - - - - - - - - 220
Registration Assembly - - - - - - - - - - - - - - - - - - - 221
Tray 1 Feed Roller and Separation Pad - - - - - - - - - - - 224
Tray 2 and 3 Pickup, Feed, and Separation Rollers - - - - 226
Paper Input Unit Sensor (PS2) - - - - - - - - - - - - - - - 227
Registration Sensor (PS1) - - - - - - - - - - - - - - - - - 229
Face-up Solenoid Assembly (SL3) - - - - - - - - - - - - - 231
Transfer Roller Assembly - - - - - - - - - - - - - - - - - - 232
Tray 2 and 3 Assemblies - - - - - - - - - - - - - - - - - - 234

Download Service Manual And Resetter Printer at http://printer1.blogspot.com

Control Panel

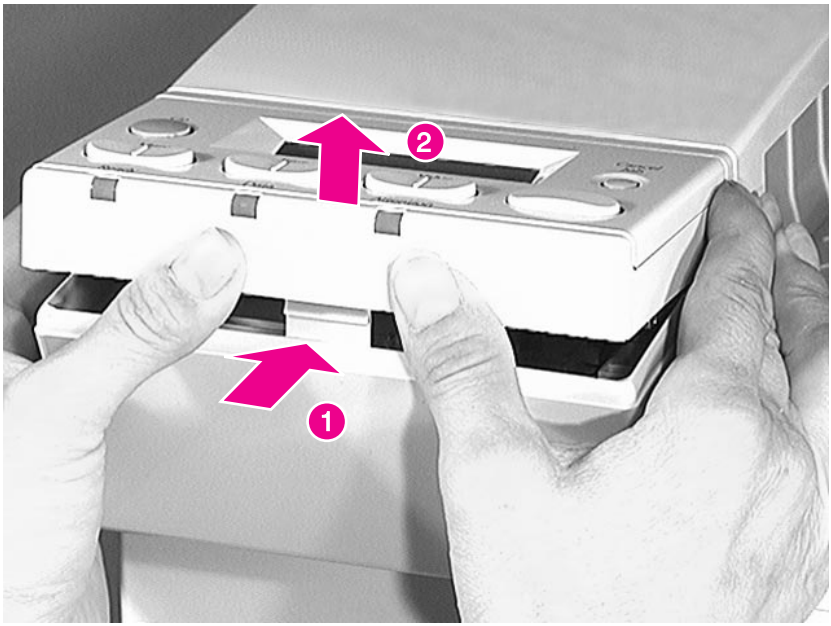

Figure 6-3 **Control Panel (1 of 2)**

1 While pushing in on the center area (figure 6-3, callout), lift up on the forward edge of the control panel to release the plastic retaining tab.

Download Service Manual And Resetter Printer at http://printer1.blogspot.com

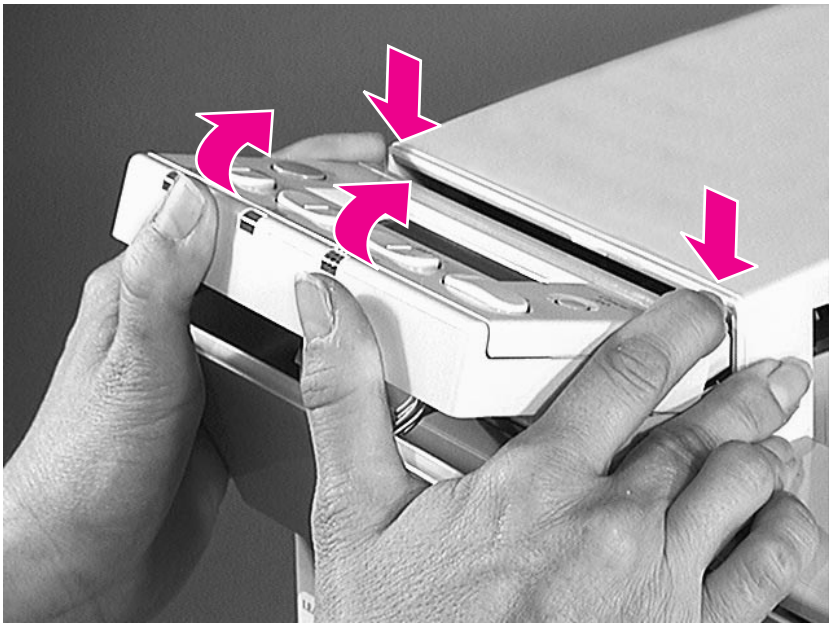

Figure 6-4 **Control Panel (2 of 2)**

2 Press down on the back while pushing up on the front of the Control Panel to free it from the chassis.

To Reinstall:

Plug in the cable, replace the cable in its retainer, insert the rear edge of the control panel under the top cover lip, and press down on the forward edge to snap it into place.

Download Service Manual And Resetter Printer at http://printer1.blogspot.com

Covers

There are five cover assemblies in this printer:

- AC Access Cover, located at the left rear of the printer.
- Back Cover, provides access to the High Voltage Power Supply, DC Controller, Low Voltage Power Supply, and Main Motor.
- Front Cover, including front access door.
- Left Lower Cover, located below the Diverter Access Door.
- Top Cover, provides access to the Face-down Delivery Unit and Laser/Scanner Assembly.

Download Service Manual And Resetter Printer at http://printer1.blogspot.com

AC Access Cover

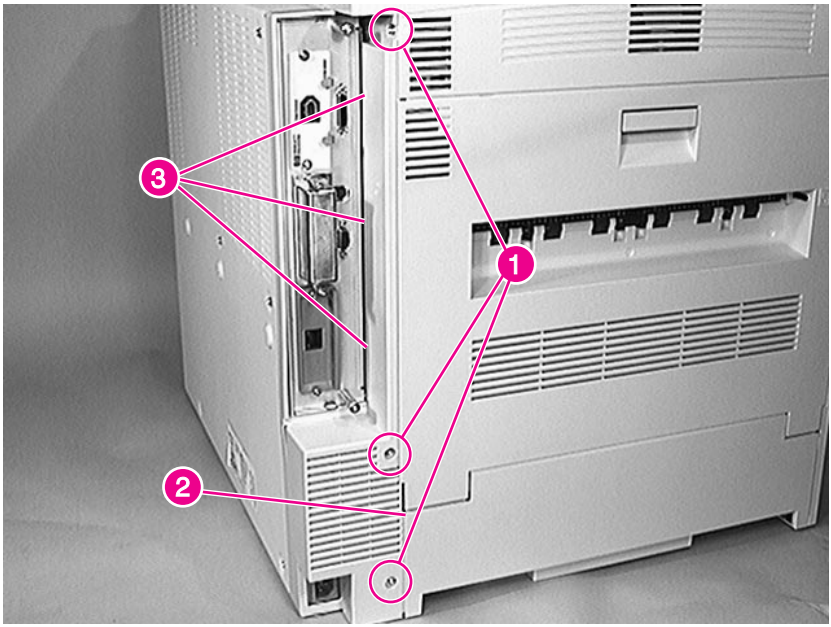

Figure 6-5 **AC Access Cover**

1. Remove the Formatter PCA.
2. Remove 3 screws (figure 6-5, callout 1).

To Reinstall:

1. Insert the panel edge (figure 6-5, callout 2) inside the back cover (if installed).
2. Be sure to insert the three alignment tabs (figure 6-5, callout 3) into their slots before replacing the screws.

Download Service Manual And Resetter Printer at http://printer1.blogspot.com

Back Cover

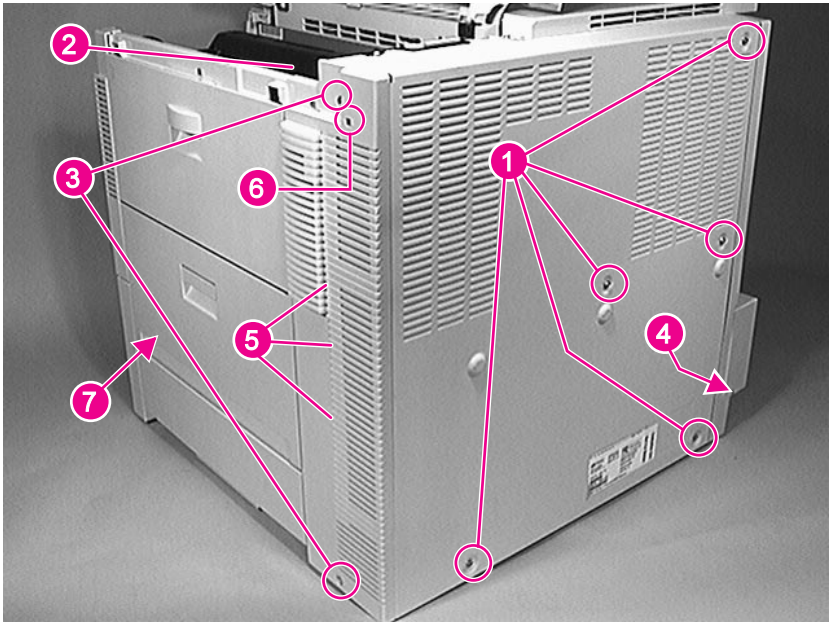

Figure 6-6 **Back Cover**

Note Remove the metal back cover and the plastic panel at the right rear as a single unit. The square opening at the upper rear corner on the right-side plastic panel is the engine test access (callout 6).

1 Remove 5 screws (figure 6-6, callout 1).

2 Open the top cover door, and remove 1 screw (figure 6-6, callout 2)

3 Open the 2000-sheet Input Tray transfer door (if installed), Tray 1, and the Right Lower Door Assembly (callout 7).

4 Remove 2 screws (figure 6-6, callout 3) from the plastic panel to the left of the metal back cover.

5 Carefully release the cover around the AC input connector (figure 6-6, callout 4) at the lower right of the back cover, and slide the right side of the cover slightly forward.

6 Carefully release the retaining tabs (figure 6-6, callout 5) on the plastic panel to the left of the metal back cover by gently pulling the cover to the left while moving both pieces away from the printer chassis.

Download Service Manual And Resetter Printer at http://printer1.blogspot.com

Front Cover

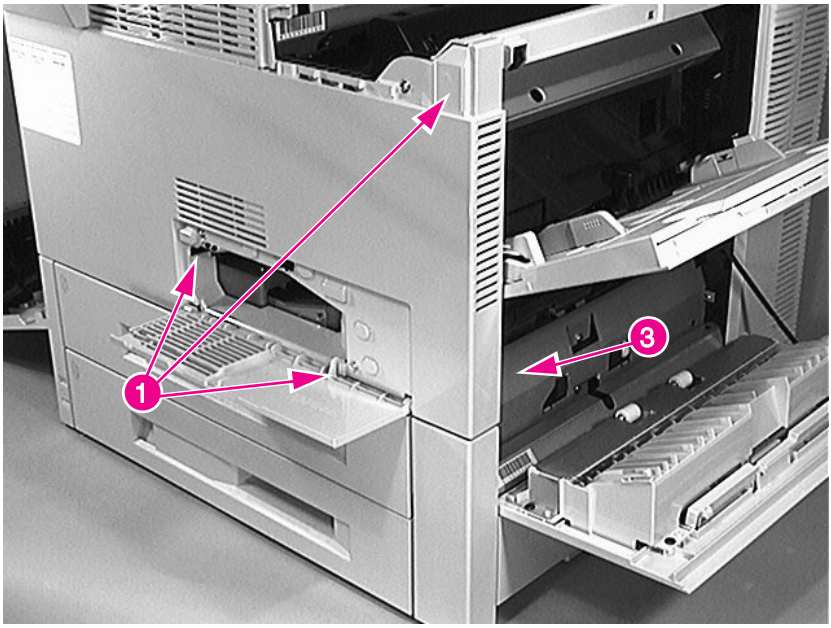

Figure 6-7 **Front Cover (1 of 2)**

1 Open all access doors and remove the Duplexer if installed.

2 Open the front access door, and remove 3 screws (figure 6-7, callout 1).

Download Service Manual And Resetter Printer at http://printer1.blogspot.com

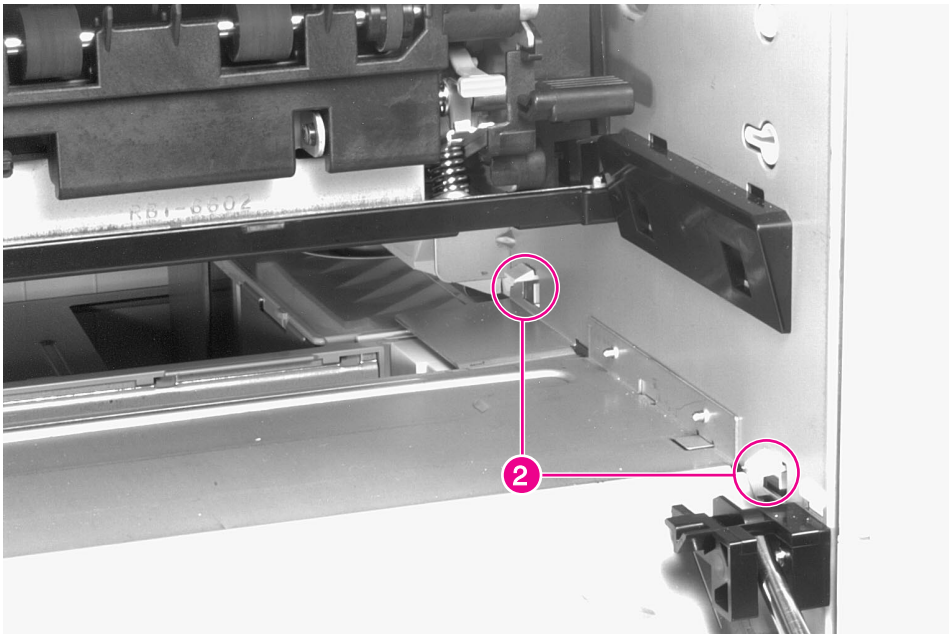

Figure 6-8 **Front Cover (2 of 2)**

3 Open the Diverter Access Door and release the two plastic retaining tabs inside the Duplexer cavity (figure 6-8, callout 2).

CAUTION Be careful; the plastic upper retaining tabs will break off if the cover is tilted too far out.

4 Carefully pull the bottom of the cover away from the chassis while moving it to the right to release the retaining tab (figure 6-7, callout 3).

5 Carefully tilt the bottom edge of the cover away from the chassis to release the upper retaining tabs.

Download Service Manual And Resetter Printer at http://printer1.blogspot.com

Left Lower Cover

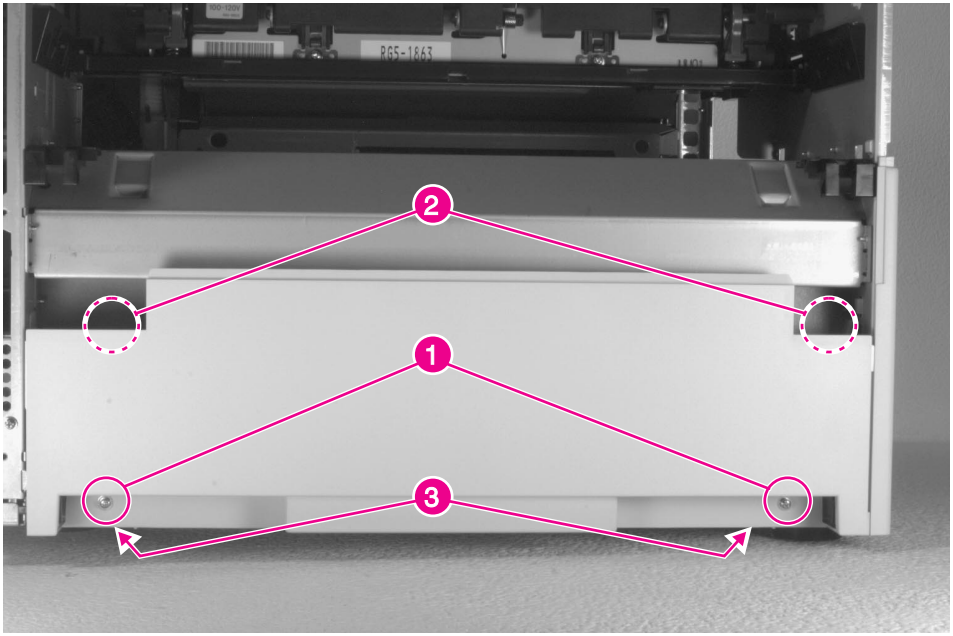

Figure 6-9 **Left Lower Cover**

CAUTION Be careful not to damage the plastic guides on the inside of the lower left cover. They are part of the Duplexer paper path.

1. Remove the Diverter Assembly access door (see figure 6-15).
2. Remove 2 screws (figure 6-9, callout 1).
3. Press down firmly on the top cover outer ends to release the retaining tabs on the inside of the cover (figure 6-9, callout 2) and the retaining tabs at the lower edge of the cover (figure 6-9, callout 3).
4. Pull the cover away from the chassis, left side first.

To Reinstall:

1. Relocate the right side of the cover behind the plastic edge piece first.
2. Slide the cover toward the chassis and insert the two retaining tabs into position. Lift up to snap the cover into place.

Download Service Manual And Resetter Printer at http://printer1.blogspot.com

Top Cover

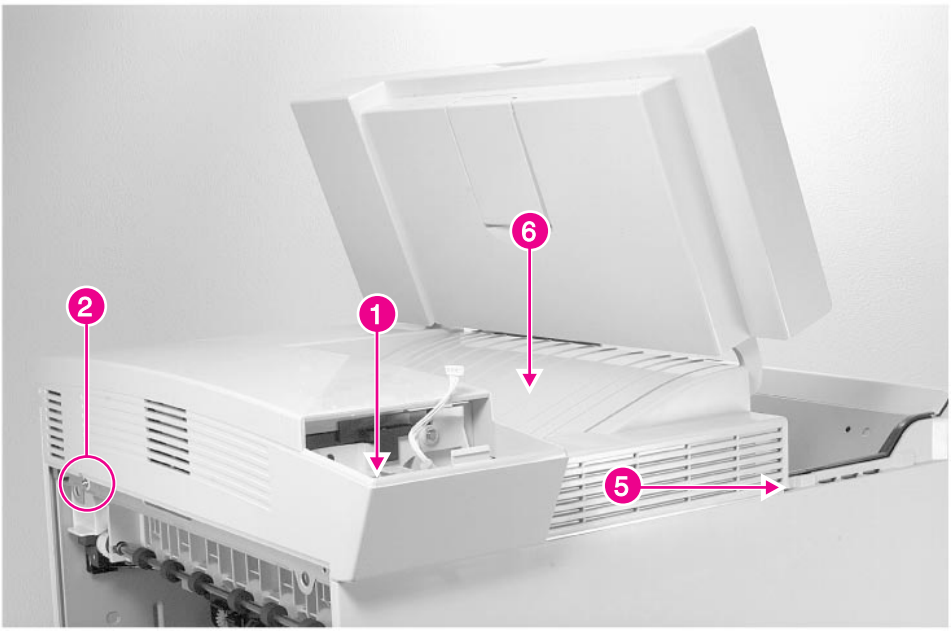

Figure 6-10 **Top Cover (1 of 2)**

1. Remove the Control Panel (see figure 6-3 on page 165), then remove 1 screw (figure 6-10, callout 1).
2. Open the Diverter Assembly access door, and remove 1 screw (figure 6-10, callout 2).

Download Service Manual And Resetter Printer at http://printer1.blogspot.com

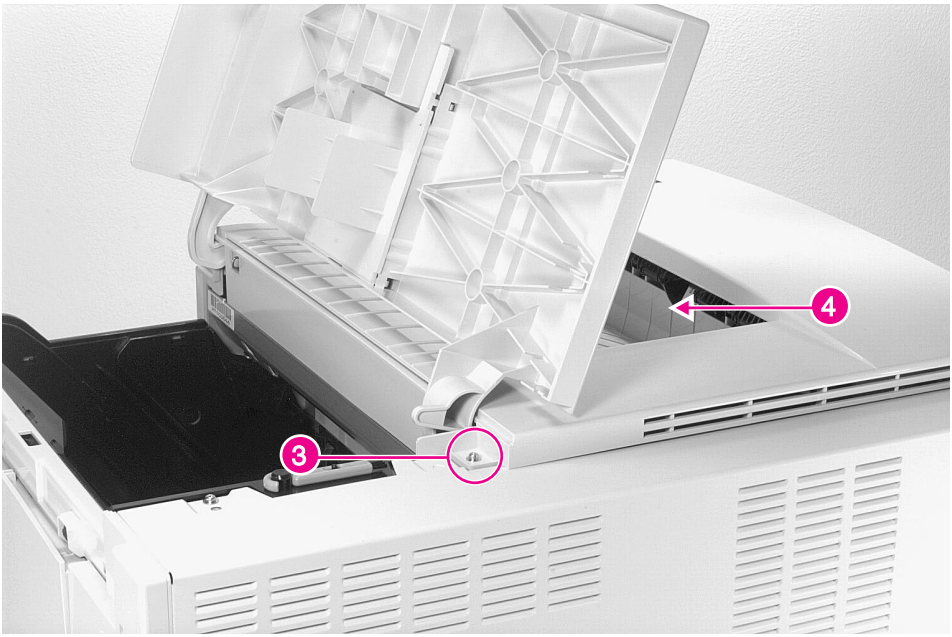

Figure 6-11 **Top Cover (2 of 2)**

3 Open the top cover door, and remove 1 screw (figure 6-11, callout 3).

CAUTION Be careful not to damage the Face-down Bin Full sensor flag (figure 6-11, callout 4) when removing the top cover.

4 Lift (and hold) the top cover door up, and carefully pull out on the cover to release the retaining tab (figure 6-10, callout 5).

5 Hold the Face-down Bin (figure 6-10, callout 6) down while carefully and slowly lifting the top cover straight up until it clears the Face-down Bin Full sensor flag and the Delivery Unit.

Download Service Manual And Resetter Printer at http://printer1.blogspot.com

To Reinstall:

CAUTION Be careful not to damage the Face-down Bin Full sensor flag (figure 6-11, callout 4) when replacing the top cover.

1. Hold the top cover door up and the Face-down Bin (figure 6-10, callout 6) down while lowering the cover into position.
2. Slide the Face-down Bin under the Face-down Bin Full sensor flag, and make sure that the cam (figure 6-11, callout 4) at the rear of the top cover door is properly positioned while lowering the top cover into place.
3. Make sure that the top cover is seated properly and that the retaining tabs are in place before replacing the screws.

Download Service Manual And Resetter Printer at http://printer1.blogspot.com

Delivery Unit (for Face-down Bin)

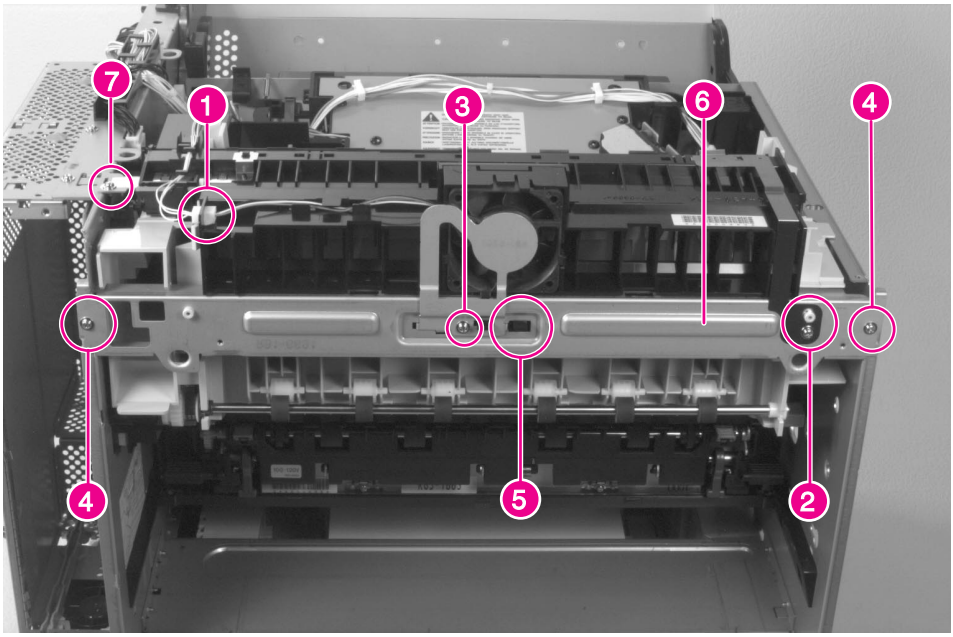

Figure 6-12 **Delivery Unit (1 of 2)**

1 Remove the following components:

- Formatter Assembly (see figure 6-35 on page 201)
- AC Access Cover (see figure 6-5 on page 168)
- Top Cover (see figure 6-10 on page 173)
- Front Cover (see figure 6-7 on page 170)

2 Unplug and re-route the fan cable out of the way (figure 6-12, callout 1).

3 Remove 1 screw (figure 6-12, callout 2) to loosen the grounding strip.

4 Remove 1 screw (figure 6-12, callout 3), and remove the metal fan shield.

5 Open the Diverter Assembly access door, remove 2 screws (figure 6-12, callout 4), release the plastic retaining tabs (figure 6-12, callout 5), and remove the metal mounting bracket (figure 6-12, callout 6).

Download Service Manual And Resetter Printer at http://printer1.blogspot.com

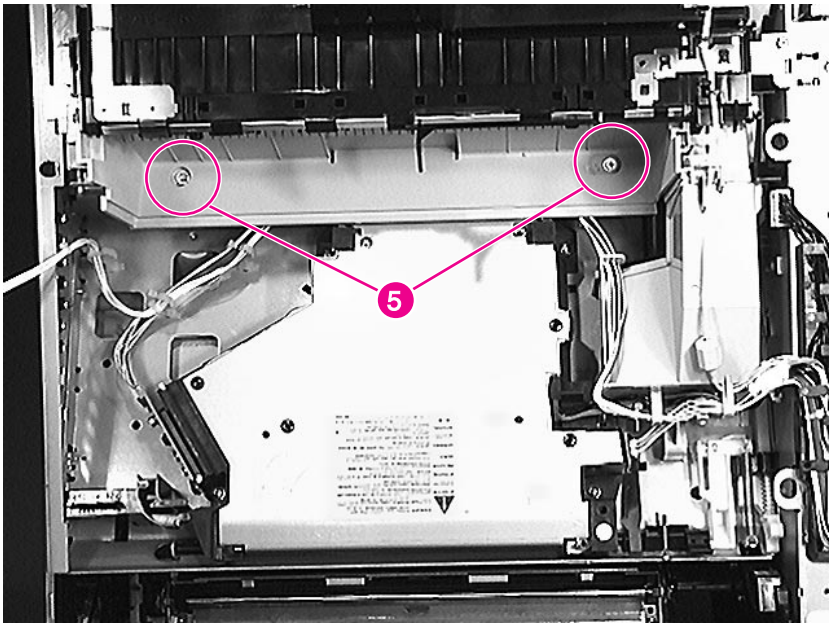

Figure 6-13 **Delivery Unit (2 of 2)**

6 Remove 2 screws (figure 6-12, callout 5) and 1 screw (figure 6-12, callout 7)

CAUTION Be careful not to damage the plastic sensor flags and gears on the left end of the Delivery Unit.

7 Lift the left end of the Delivery Unit approximately 1/8 inch to clear the alignment pin, and carefully rock it forward and backward while sliding it out of the chassis.

Download Service Manual And Resetter Printer at http://printer1.blogspot.com

To Reinstall:

CAUTION Be careful not to damage the plastic sensor flags and gears on the left end of the Delivery Unit.

1. Place the plastic edge on the right end of the Delivery Unit into the chassis. Make sure that the plastic support tab on the right end of the Delivery Unit slides on top of the chassis.
2. Make sure that the plastic sensor flags and gears on the left end of the Delivery Unit can move freely.
3. Replace the metal mounting bracket (figure 6-12, callout 6) before replacing the Delivery Unit screws. Make sure that the plastic clips (figure 6-12, callout 5) are snapped into place before tightening the mounting screws (figure 6-12, callout 4).

Download Service Manual And Resetter Printer at http://printer1.blogspot.com

Diverter Assembly

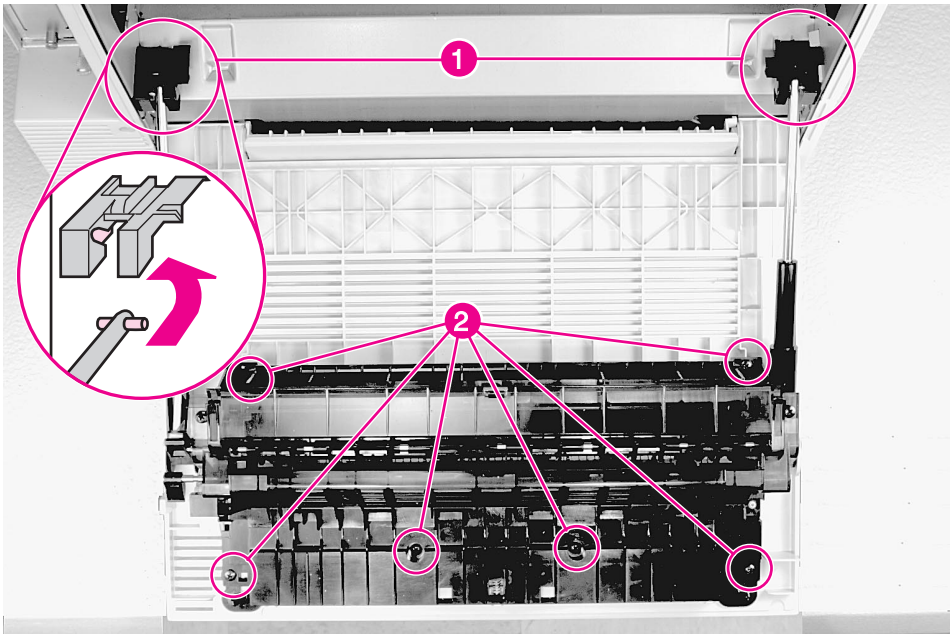

Figure 6-14 **Diverter Assembly**

CAUTION Support the Diverter Assembly access door during this procedure to prevent damage to the plastic hinge pins.

1. Open the Diverter Assembly access door and release the support struts (figure 6-14, callout 1) by sliding the strut ends forward and downward.
2. Remove 6 self-tapping screws (figure 6-14, callout 2).

Note The access door support struts will fall free when the Diverter Assembly is lifted away from the access door.

3. Lift the Diverter Assembly up and away from the access door.

Download Service Manual And Resetter Printer at http://printer1.blogspot.com

Diverter Door Assembly

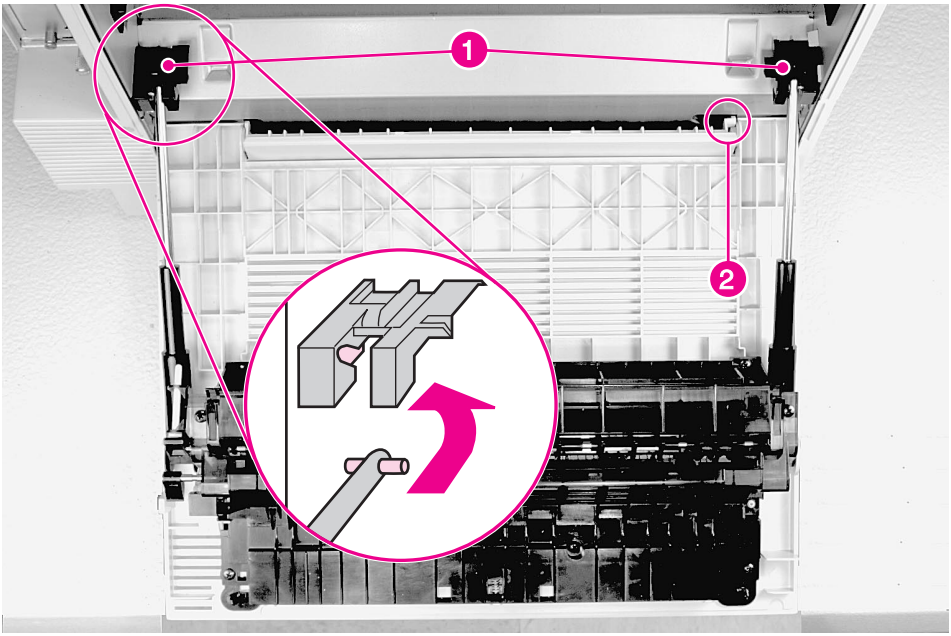

Figure 6-15 **Diverter Door Assembly**

1. Open the Diverter access door, and release the support struts (figure 6-15, callout 1) by sliding the strut ends forward and downward.
2. Rotate the door up to align the flat sides of the right hinge pin with the retaining slot (figure 6-15, callout 2), and lift upwards to release it from the retaining slot.
3. Continue lifting up on the right side of the door while pushing it to the left to rotate the left hinge pin out of its locating cavity.

To Reinstall:

1. Insert the left side of the door into position first, and then rotate the right side down to snap the hinge pins into position.
2. Reconnect the support struts to the chassis.

Download Service Manual And Resetter Printer at http://printer1.blogspot.com

Lower Right Door Assembly

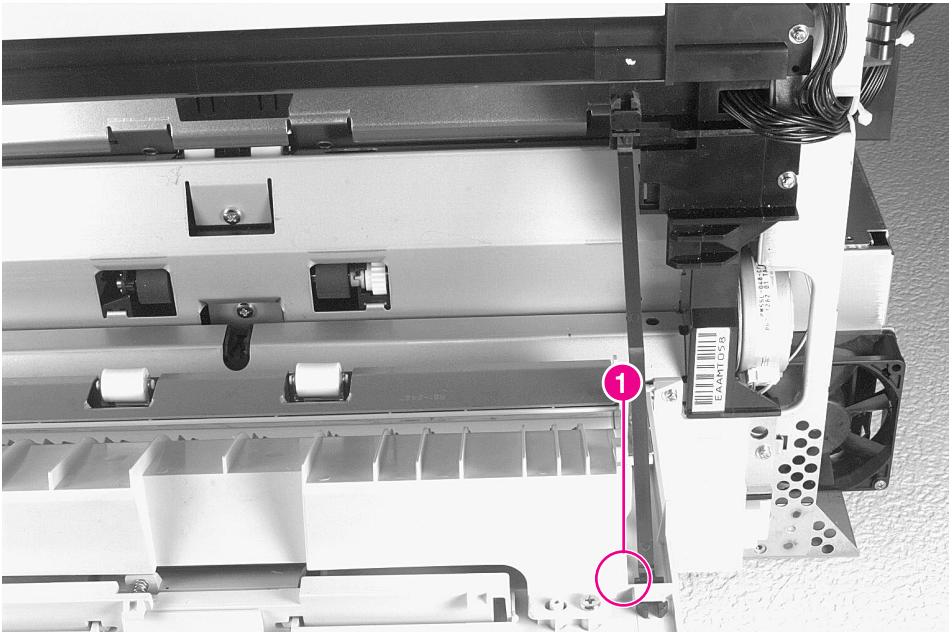

Figure 6-16 **Lower Right Door Assembly (1 of 3)**

1. Remove the back cover assembly (see figure 6-6).
2. Remove Tray 2 and Tray 3.
3. Open the Lower Right Door, and release the lower end of the support strap (figure 6-16, callout 1).

Download Service Manual And Resetter Printer at http://printer1.blogspot.com

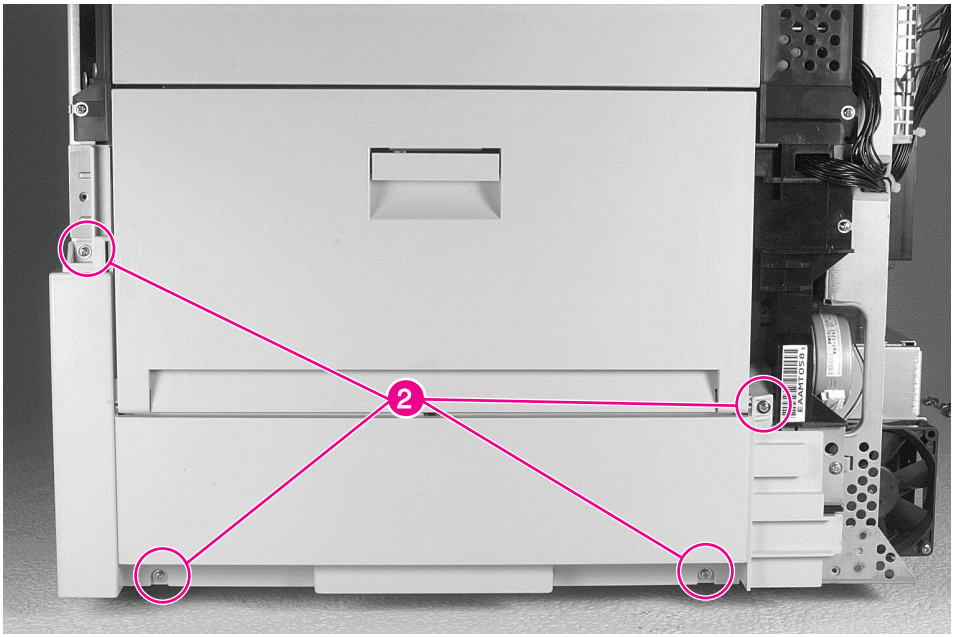

Figure 6-17 **Right Lower Door Assembly (2 of 3)**

4 Remove 4 screws (figure 6-17, callout 2).

Download Service Manual And Resetter Printer at http://printer1.blogspot.com

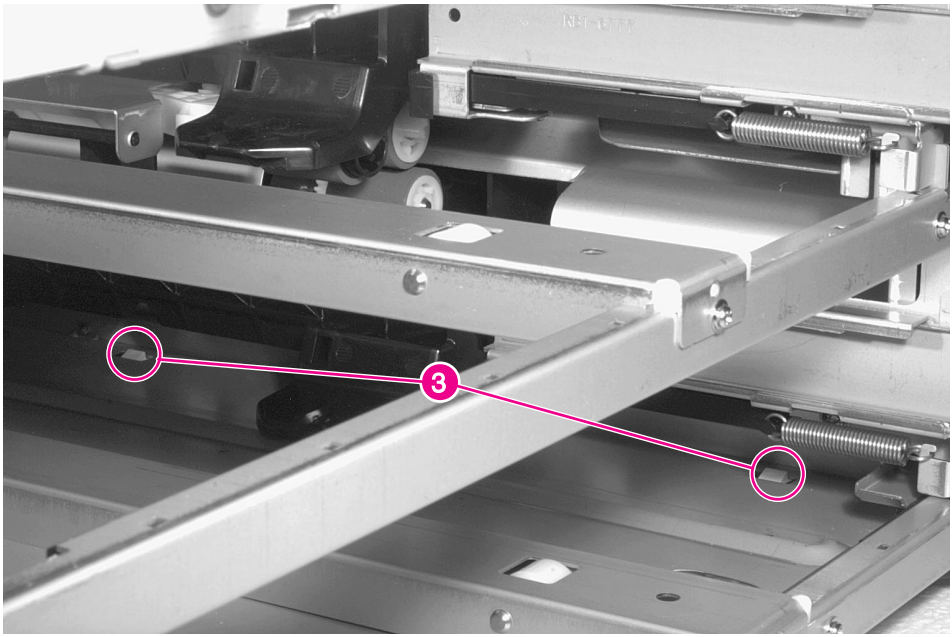

Figure 6-18 **Right Lower Door Assembly (3 of 3)**

5 Release two retainer tabs from the inside of the Tray 3 cavity (figure 6-18, callout 3).

6 Slide the door assembly away from the printer chassis.

Download Service Manual And Resetter Printer at http://printer1.blogspot.com

Fan 1, Laser/Scanner and Housing (Exhaust)

Fan Housing

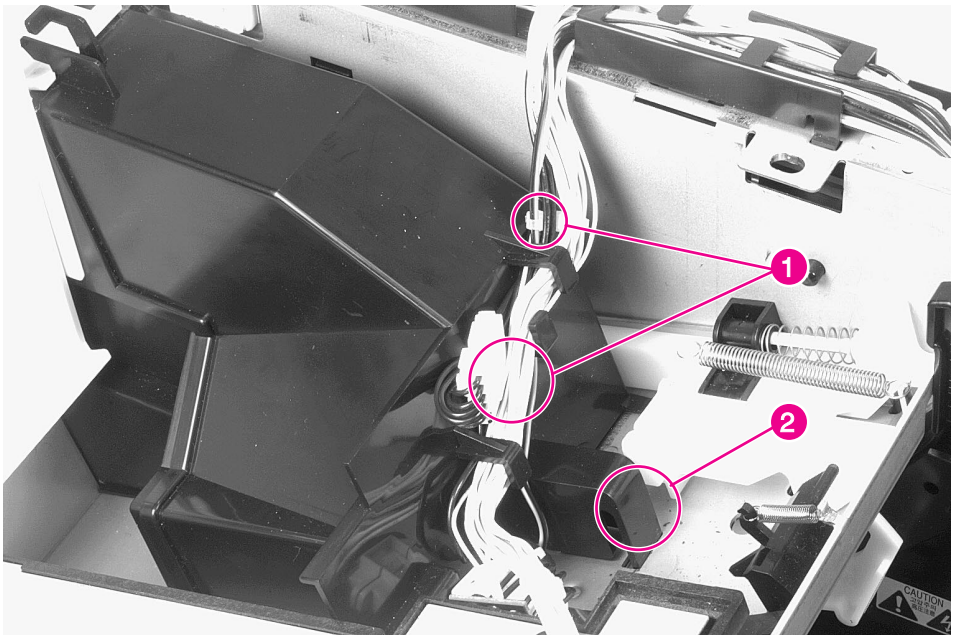

Figure 6-19 **Fan 1, Laser/Scanner (1 of 2)**

1 Remove the toner cartridge.

2 Remove the top cover (see figure 6-10 on page 173).

3 Remove and re-route the cables away from fan housing (figure 6-19, callout 1).

4 Release the housing retainer clip located inside the toner cartridge cavity (figure 6-19, callout 2), and lift the housing up and out of the chassis.

Download Service Manual And Resetter Printer at http://printer1.blogspot.com

Fan 1 Motor

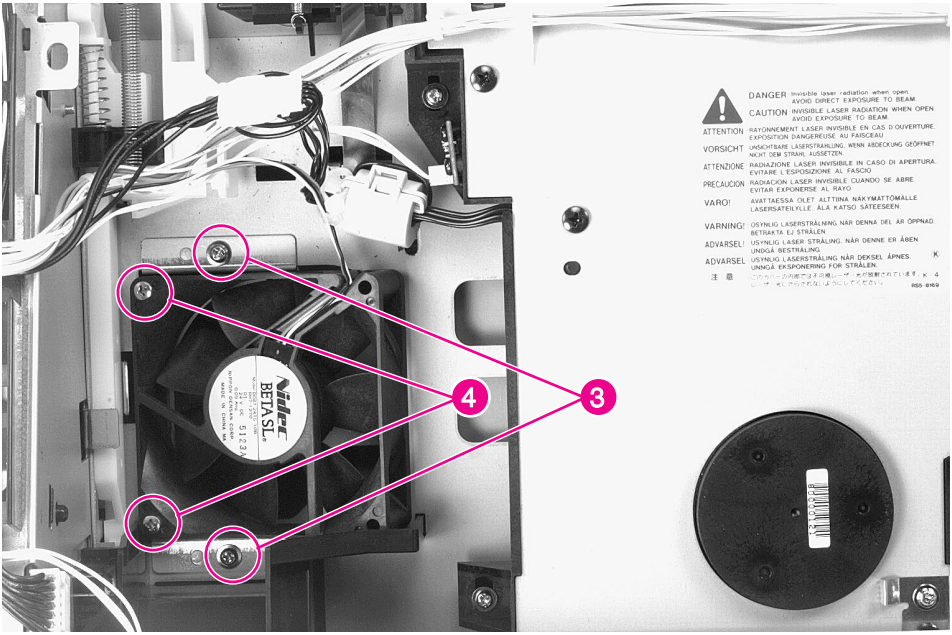

Figure 6-20 **Fan 1, Laser/Scanner (2 of 2)**

1. Unplug the fan cable from the DC Controller PCA.
2. Remove 2 screws (figure 6-20, callout 3), and lift the fan and bracket assembly out of the chassis.
3. Remove 2 screws (figure 6-20, callout 4) to separate the fan motor from the bracket.

Download Service Manual And Resetter Printer at http://printer1.blogspot.com

Fan 2, Low Voltage Power Supply (Exhaust)

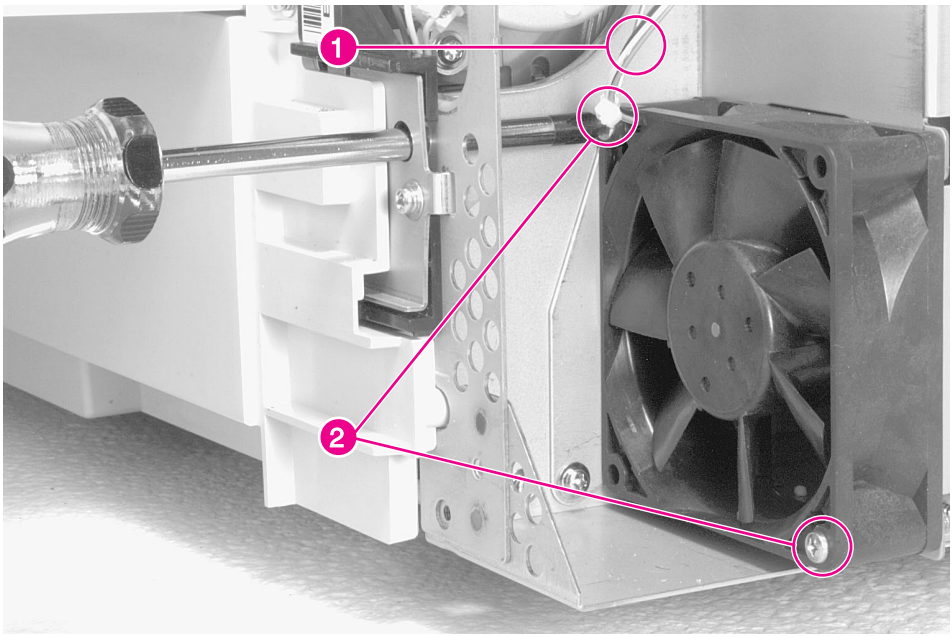

Figure 6-21 **Fan 2, Low Voltage Power Supply**

1. Remove the back cover (see figure 6-6 on page 169).
2. Remove the fan cable from the DC Controller PCA (figure 6-21, callout 1).
3. Remove 2 screws (figure 6-21, callout 2).

Download Service Manual And Resetter Printer at http://printer1.blogspot.com

Fan 3, Formatter Fan and Housing (Intake)

Fan Motor

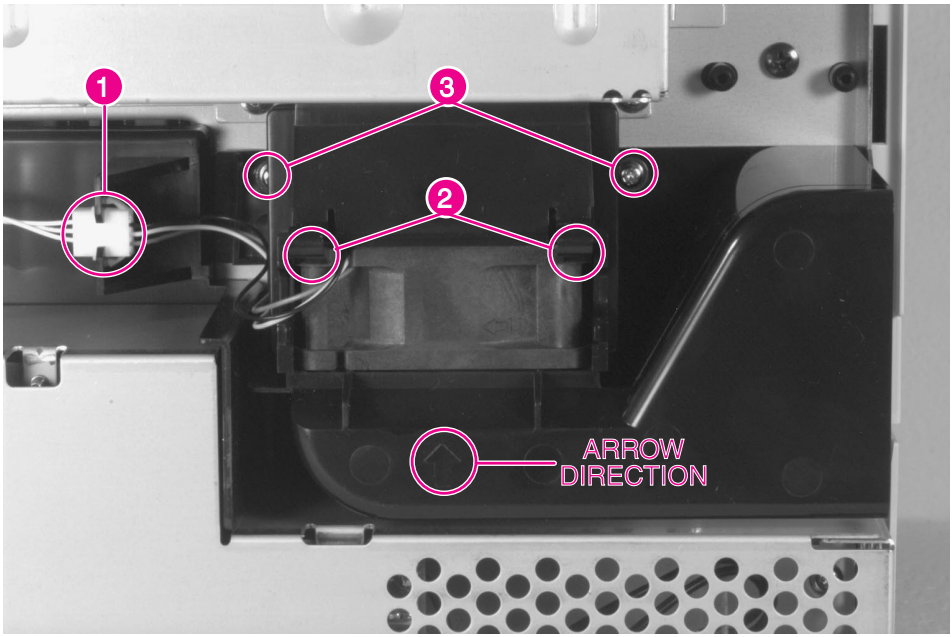

Figure 6-22 **Fan 3, Formatter Fan**

Note The fan motor (FM3) can be removed without removing the housing assembly.

1 Remove the back cover (see figure 6-6 on page 169).

2 Unplug the fan connector (figure 6-22, callout 1).

CAUTION Do not bend the fan retainer clips upward. Release them by pinching.

3 Release the 2 retainer clips (figure 6-22, callout 2), and slide the fan out of the housing assembly.

Fan Housing

4 Remove 2 screws and remove housing.

To Reinstall:

Make sure that the fan cable exits from the upper left corner.

Download Service Manual And Resetter Printer at http://printer1.blogspot.com

Fan 4, Delivery Unit (Exhaust)

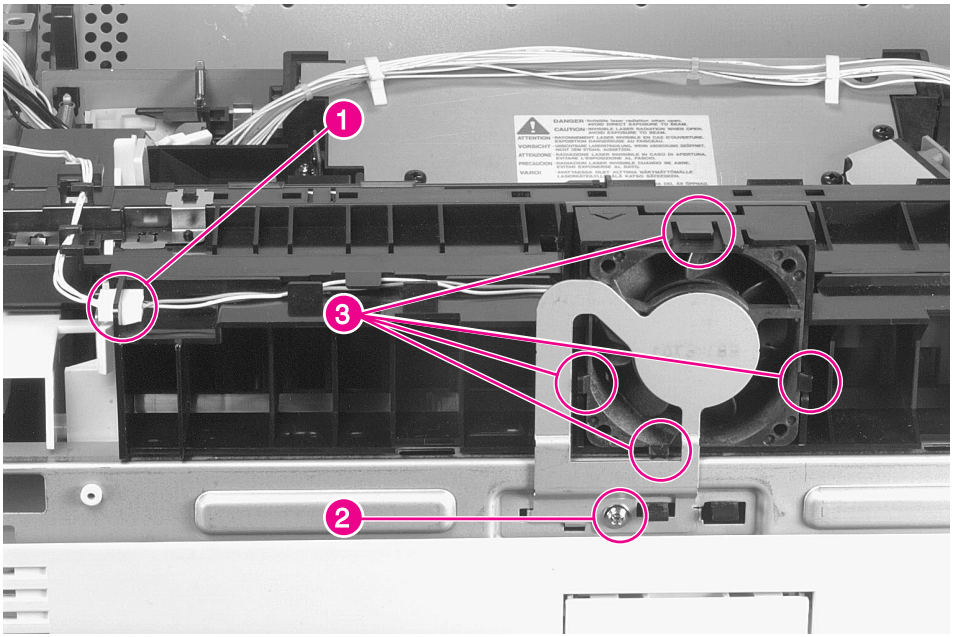

Figure 6-23 **Fan 4, Delivery Unit**

1 Remove the top cover (see figure 6-10).

2 Unplug the fan cable (figure 6-23, callout 1).

3 Remove 1 screw (figure 6-23, callout 2), and remove the metal fan shield.

4 Release 4 retainer clips (figure 6-23, callout 3), and slide the fan forward out of the Delivery Unit Assembly.

Download Service Manual And Resetter Printer at http://printer1.blogspot.com

Fan 5, Tray 1 (Intake)

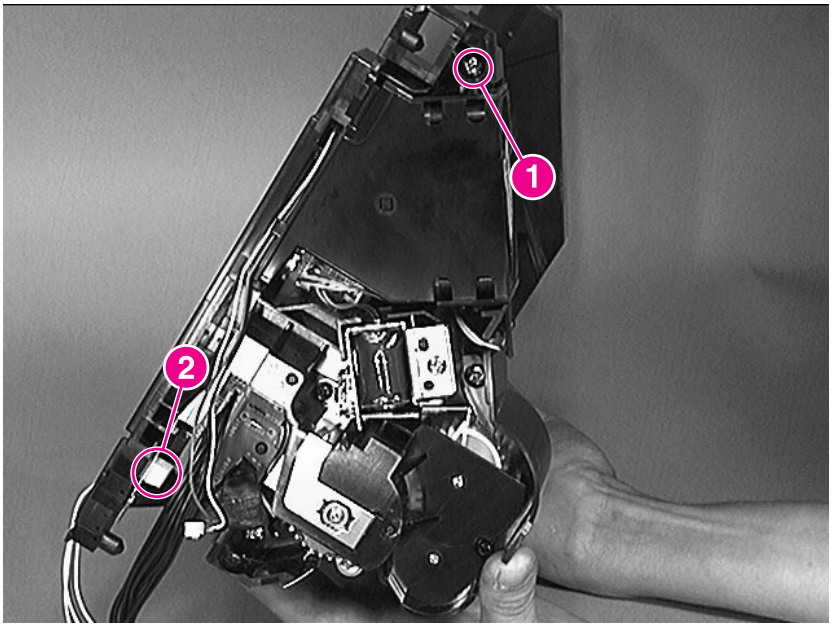

Figure 6-24 **Fan 5 Removal (1 of 2)**

1 Remove Tray 1.

2 Remove the Tray 1 Pickup Unit.

3 Remove 1 screw (callout 1).

4 Disconnect the cable (callout 2). Cable is shown disconnected.

Download Service Manual And Resetter Printer at http://printer1.blogspot.com

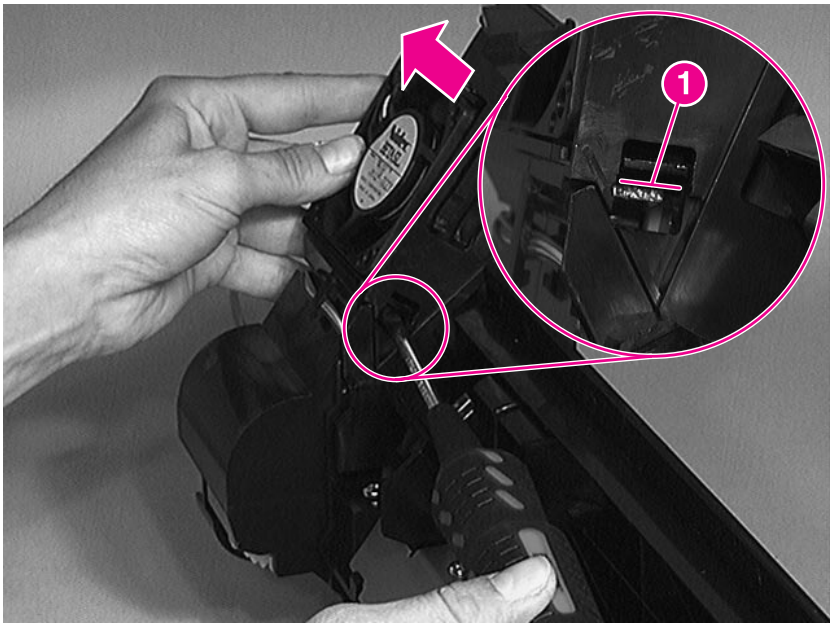

Figure 6-25 **Fan 5 Removal (2 of 2)**

5 Insert the flat blade of a screwdriver along the line indicated by callout 1.

6 Turn the screwdriver counter-clockwise slightly to free the fan housing from the fan duct. Then, slide the fan housing out of the duct.

7 Slide the fan out of the housing to replace it.

Download Service Manual And Resetter Printer at http://printer1.blogspot.com

Tray 1

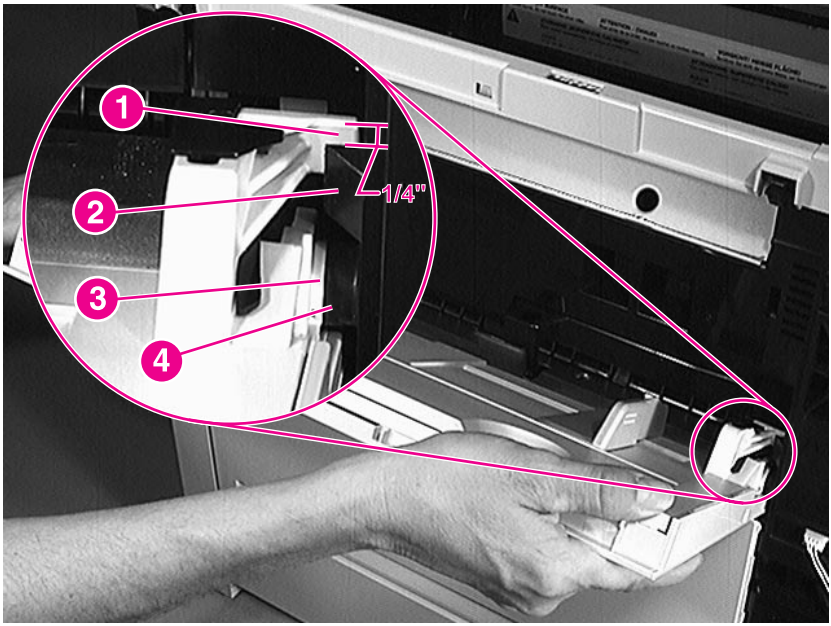

Figure 6-26 **Tray 1 Removal (1 of 3)**

1. To remove Tray 1, open the tray fully, then partially close it until the distance between the retaining tab (callout 1) and the stop on the chassis (callout 2) is 1/4”.
2. Pull the right side of the tray outward to free the clip (callout 3) from the pin (callout 4).

Download Service Manual And Resetter Printer at http://printer1.blogspot.com

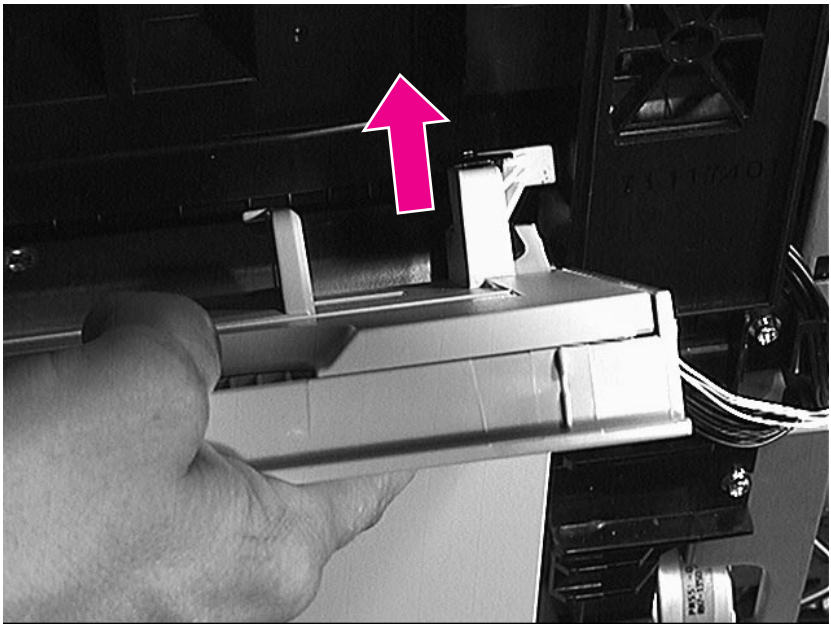

Figure 6-27 **Tray 1 Removal (2 of 3)**

3 Raise the right side of the tray and guide the white tab around the stop.

Download Service Manual And Resetter Printer at http://printer1.blogspot.com

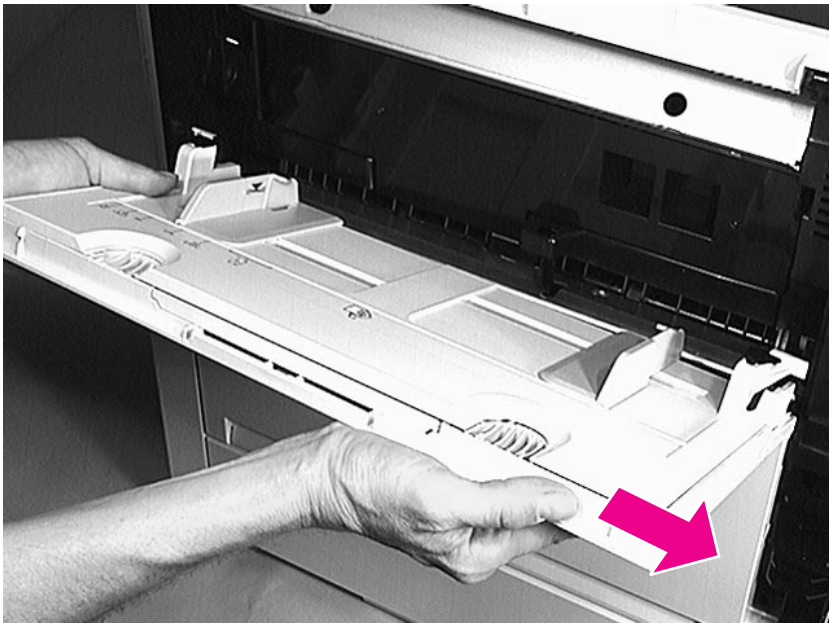

Figure 6-28 **Tray 1 Removal (3 of 3)**

4 Slide the tray to the right, to free the tray on the left side of the chassis.

5 Remove the tray.

Download Service Manual And Resetter Printer at http://printer1.blogspot.com

Tray 1 Pickup Assembly

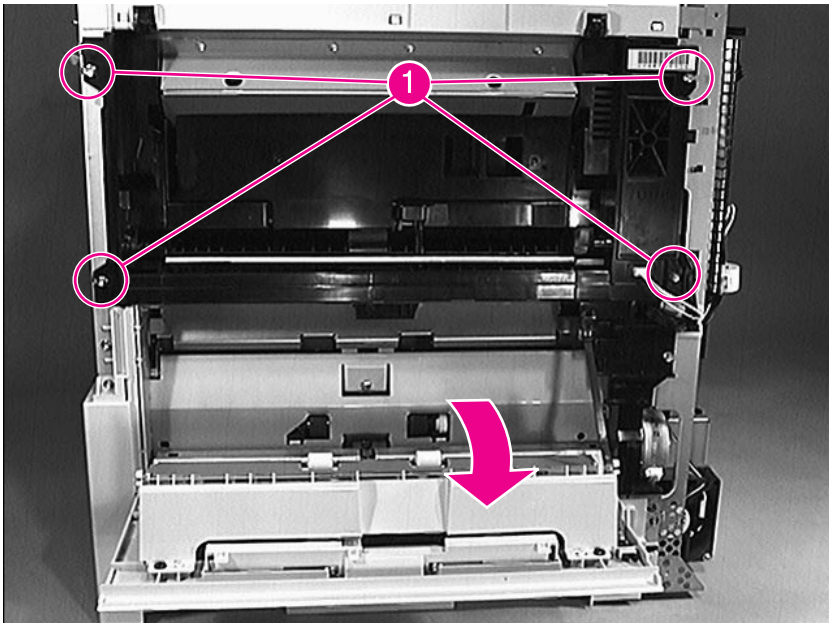

Figure 6-29 **Tray 1 Pickup Unit Removal (1 of 4)**

1. Remove the Front Cover.
2. Remove the Rear Cover.
3. Remove Tray 1(see page 191).
4. Open the Pickup Unit door.
5. Remove 4 screws (callout 1).

Download Service Manual And Resetter Printer at http://printer1.blogspot.com

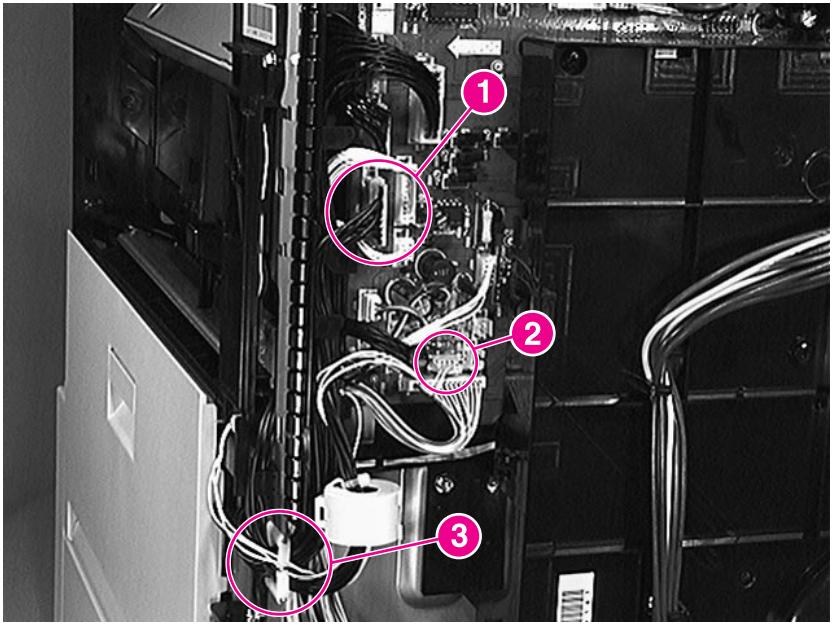

Figure 6-30 **Tray 1 Pickup Unit Removal (2 of 4)**

6 Disconnect the cables (callouts 1 and 2) on the right side of the printer.

7 Remove the cable from the cable guide (callout 3).

Download Service Manual And Resetter Printer at http://printer1.blogspot.com

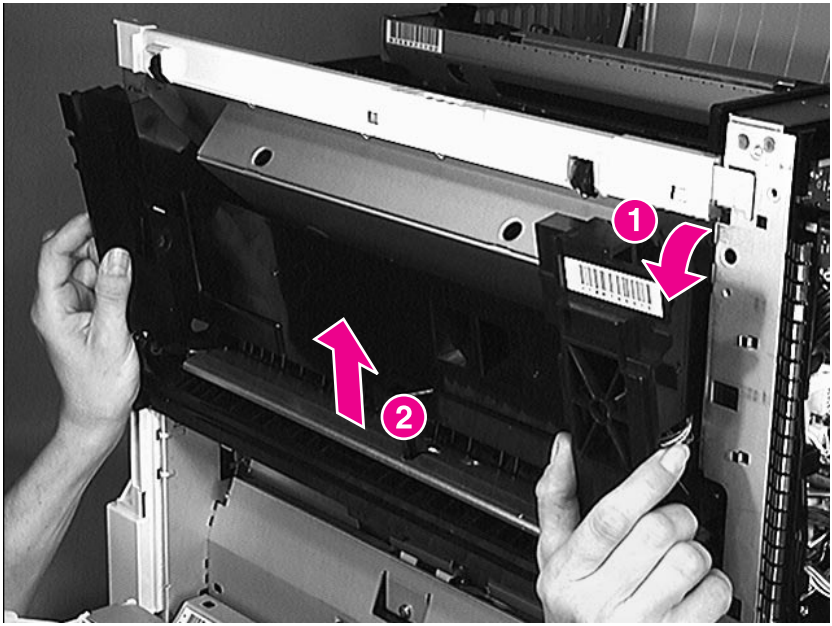

Figure 6-31 **Tray 1 Pickup Unit Removal (3 of 4)**

8 Tilt the Pickup Assembly out of the chassis from the top (callout 1), then lift up to free it from the chassis (callout 2).

9 Remove the Pickup Assembly from the chassis.

Download Service Manual And Resetter Printer at http://printer1.blogspot.com

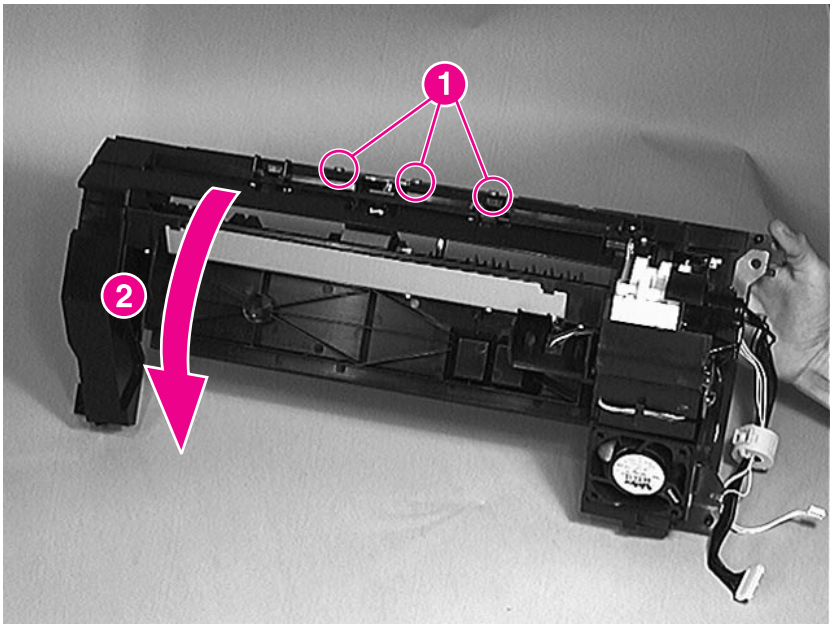

Figure 6-32 **Tray 1 Pickup Unit Removal (4 of 4)**

To Reinstall:

First, seat the 3 tabs (callout 1) behind the metal rail on the chassis. Then, pivot the Pickup Unit into place. The Pickup Unit has 4 locating pins that will engage guide holes in the chassis wen the unit is properly aligned.

Download Service Manual And Resetter Printer at http://printer1.blogspot.com

Feeder Assembly

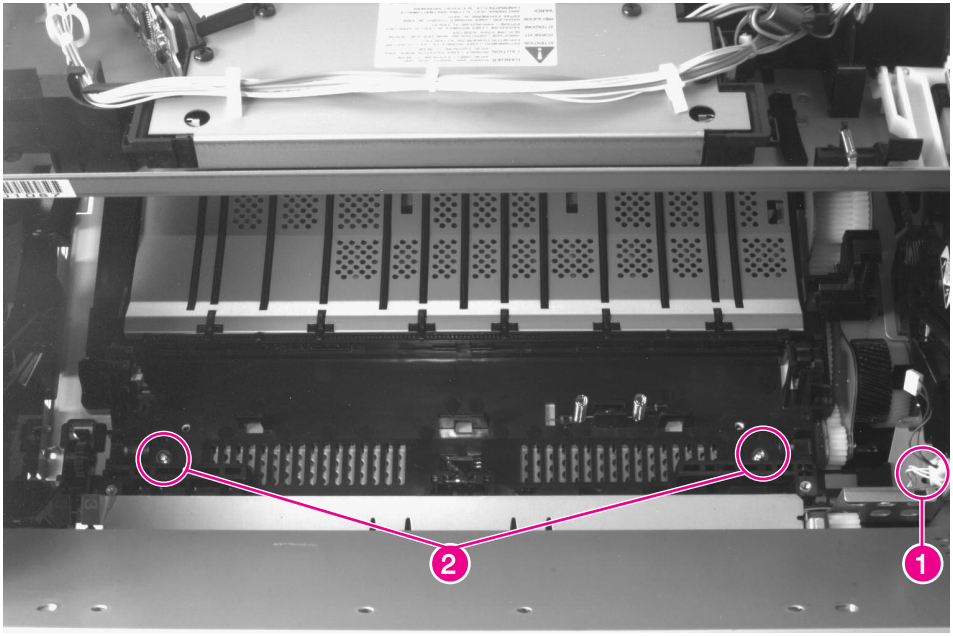

Figure 6-33 **Feeder Assembly (1 of 2)**

1. Open the left access door and remove the Duplexer (if installed).
2. Remove the Fusing Assembly (see figure 6-36 on page 202).
3. Open the Top Cover and remove the Toner Cartridge.
4. Remove the Transfer Roller Assembly (see figure 6-62 on page 232).
5. Remove the Registration Assembly (see figure 6-53 on page 221).
6. Unplug the sensor cable at the right side of the Feeder Assembly (figure 6-33, callout 1).
7. Remove 2 screws at the front of the Feeder Assembly (figure 6-33, callout 2).

Download Service Manual And Resetter Printer at http://printer1.blogspot.com

Figure 6-34 **Feeder Assembly (2 of 2)**

8 Remove 1 screw at the back of the Feeder Assembly (figure 6-34).

Note Removing the High Voltage Power Supply is recommended to ease the removal of the Feeder Assembly, primarily because of the contact points.

9 Release 4 plastic retaining tabs by moving them in the directions indicated in figure 6-34 while carefully lifting upwards on the Feeder Assembly.

10 Remove the Feeder Assembly by lifting it upwards out of the Toner Cartridge cavity.

To Reinstall:

Make sure that the plastic retaining tabs are all properly seated before replacing the screws.

Download Service Manual And Resetter Printer at http://printer1.blogspot.com

Formatter Assembly

Setting Page Count, Maintenance Count, and Serial Number

The page count, maintenance count, and printer serial number are stored in Non-Volatile Memory. PAGECOUNT is the total number of images printed by the printer, MAINTCOUNT is the page count when the next preventive maintenance should be performed (every 350,000 images), and S.N. is the printer serial number (also located on the printer back cover).

CAUTION DIMMs and the Formatter PCA can be damaged by small amounts of electrostatic discharge (ESD). Wear an anti-static wrist wrap.

If necessary to replace the Formatter PCA, these numbers should be set to the current values to accurately reflect the usage of the print engine. The procedures for setting these values are listed in table 3-14 on page 77.

Before removing the old Formatter PCA, print a Configuration Page to verify the current values.

Note If it is not possible to print a Configuration Page, try to verify the values before replacing the Formatter PCA by following steps 1 through 3, below.

After verifying the page count, maintenance count, and printer serial number from the old Formatter PCA, replace it with the new PCA.

1. Enter Service Mode as described in “Service Mode” on page 77.
2. When SERVICE MODE is displayed, press MENU to access the Service Menu.
3. Press ITEMS to display PAGECOUNT=, MAINTCOUNT=, and S.N.=.
4. Enter the appropriate values for each item.
5. Press GO to exit Service Mode.

Note The page count interval can be changed to a value less than 350, 000 for special media situations.

Download Service Manual And Resetter Printer at http://printer1.blogspot.com

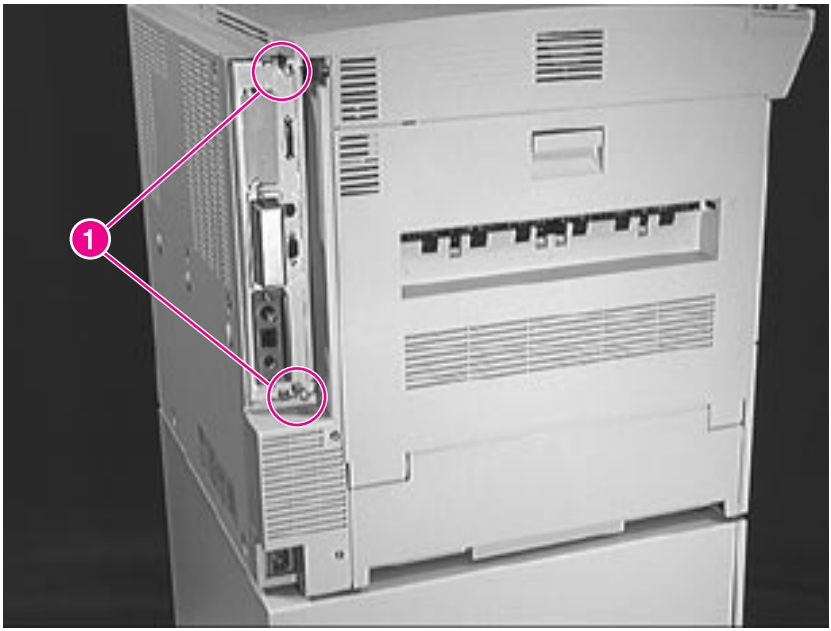

Figure 6-35 **Formatter Assembly**

1. If the Formatter is to be replaced, make sure to note the page count.
2. Loosen the two captive screws (figure 6-35, callout 1), and slide the Formatter PCA out of the chassis.
3. After installation of a replacement Formatter, be sure to re-enter the serial number, page count, and maintenance count. (See table 3-14 on page 77 for more information.)

Download Service Manual And Resetter Printer at http://printer1.blogspot.com

Fusing Assembly

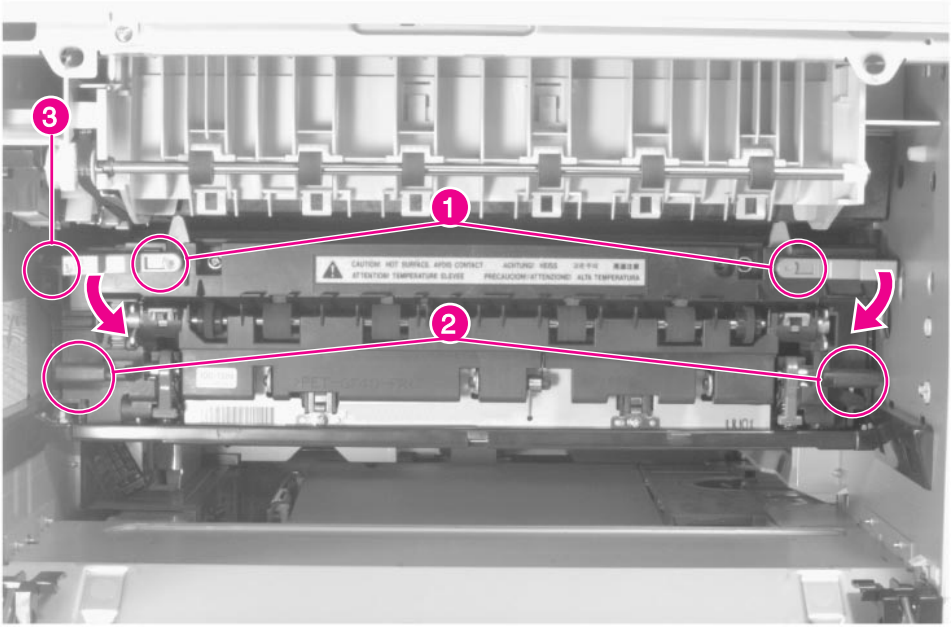

Figure 6-36 **Fusing Assembly**

1. Open the Diverter Assembly access door, and remove the Duplexer if installed.

CAUTION Use the upper levers to release the Fusing Assembly, NOT the lower levers. The lower levers set the pressure rollers inside the Fusing Assembly for envelope printing (down for single sheets, up for envelopes).

2. To release the Fusing Assembly rotate the upper levers down (figure 6-36, callout 1).
3. To remove the Fusing Assembly lift up on the finger handles (figure 6-36, callout 2) while pulling outward.

Download Service Manual And Resetter Printer at http://printer1.blogspot.com

To Reinstall:

1. Make sure that the Fuser Output sensor flag (figure 6-36, callout 3) on the upper left corner of the Fusing Assembly rotates freely.
2. Make sure that the lower levers are set down for single sheets. If having trouble printing envelopes, move the levers up. Move the levers back down when done.

Download Service Manual And Resetter Printer at http://printer1.blogspot.com

Laser/Scanner Assembly

CAUTION

The Laser/Scanner diode is extremely sensitive to ESD.

1. Remove the toner cartridge.
2. Remove the top cover (see figure 6-10).

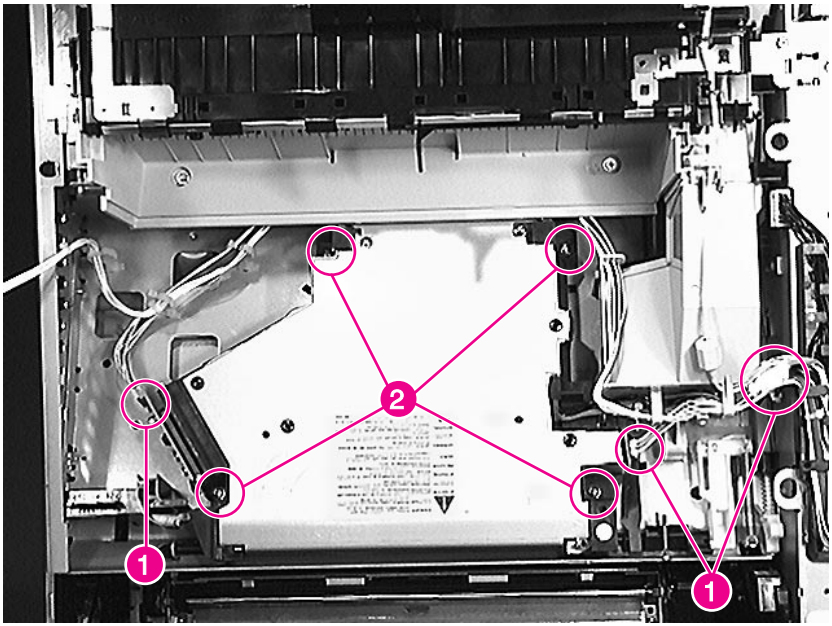

Figure 6-37 **Laser/Scanner Assembly**

3. Unplug three cable connectors (figure 6-37, callout 1).

Download Service Manual And Resetter Printer at http://printer1.blogspot.com

4 Re-route the cable running across the top of the assembly so that it is out of the way.

CAUTION Do not touch the laser/scanner mirror located under the forward edge of the assembly. Use approved ESD handling procedures when touching the Beam Detect PCA.

5 Remove 4 screws (figure 6-37, callout 2).

To Reinstall:

Make sure that the locator pins are properly seated.

Download Service Manual And Resetter Printer at http://printer1.blogspot.com

Main Gear Assembly

1 Remove the following components in the order listed:

- Toner Cartridge
- Tray 1
- Tray 2
- Transfer Roller Assembly (see figure 6-62 on page 232)
- Back Cover Assembly (see figure 6-6 on page 169)
- Tray 1 Pickup Assembly (see figure 6-26 on page 191)
- Right Lower Door Assembly (see figure 6-16 on page 181)
- Paper Input Unit (PIU) (see figure 6-42 on page 210)
- High Voltage Power Supply (HVPS) (see figure 6-51 on page 219)
- Main Motor (see figure 6-41 on page 209)

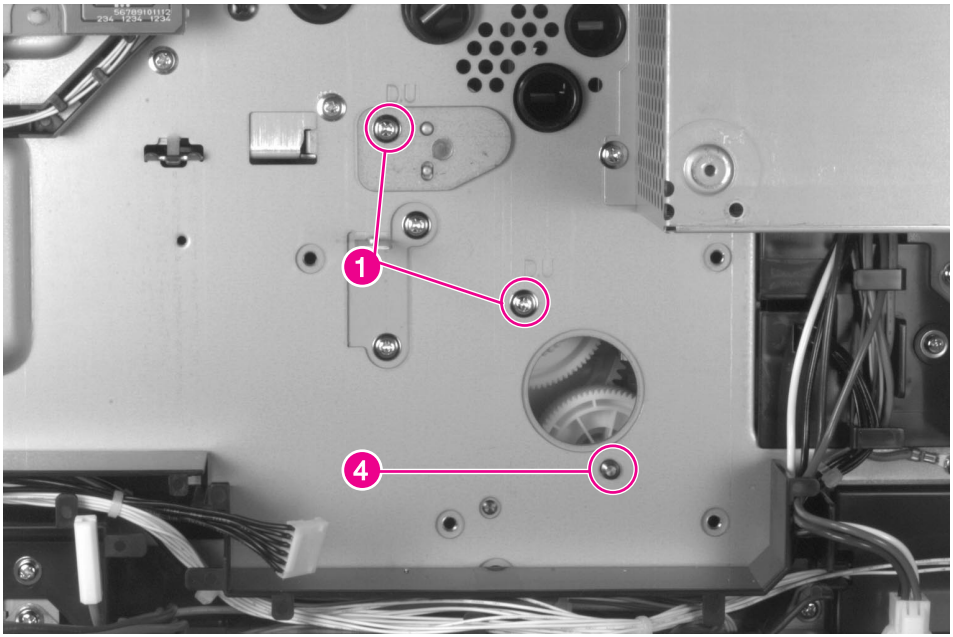

Figure 6-38 **Main Gear Assembly (1 of 3)**

2 Remove 2 screws (figure 6-38 on page 206, callout 1).

CAUTION Be careful not to damage the plastic gears when removing the Main Gear Assembly.

Download Service Manual And Resetter Printer at http://printer1.blogspot.com

Note A slight gentle rocking motion will help free the Main Gear Assembly from the printer.

3 From inside of the PIU cavity, carefully tilt the bottom of the Main Gear Assembly away from the chassis and down to free the gear mechanisms.

To Reinstall:

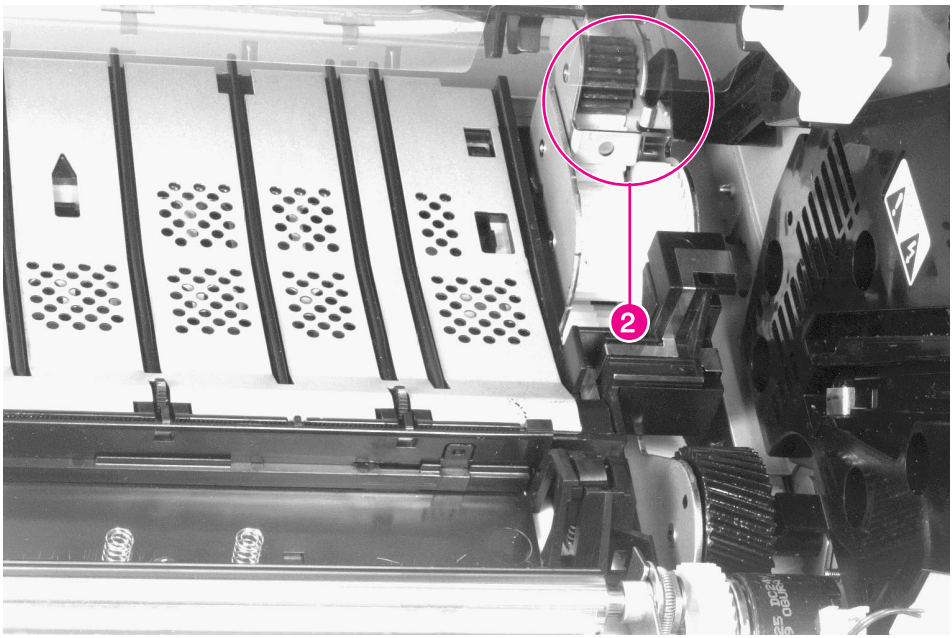

Figure 6-39 **Main Gear Assembly (2 of 3)**

Note A slight gentle rocking motion will help install the Main Gear Assembly as it is rotated into place.

1 Observe the gear assembly position from inside the toner cartridge cavity (figure 6-39, callout 2).

Download Service Manual And Resetter Printer at http://printer1.blogspot.com

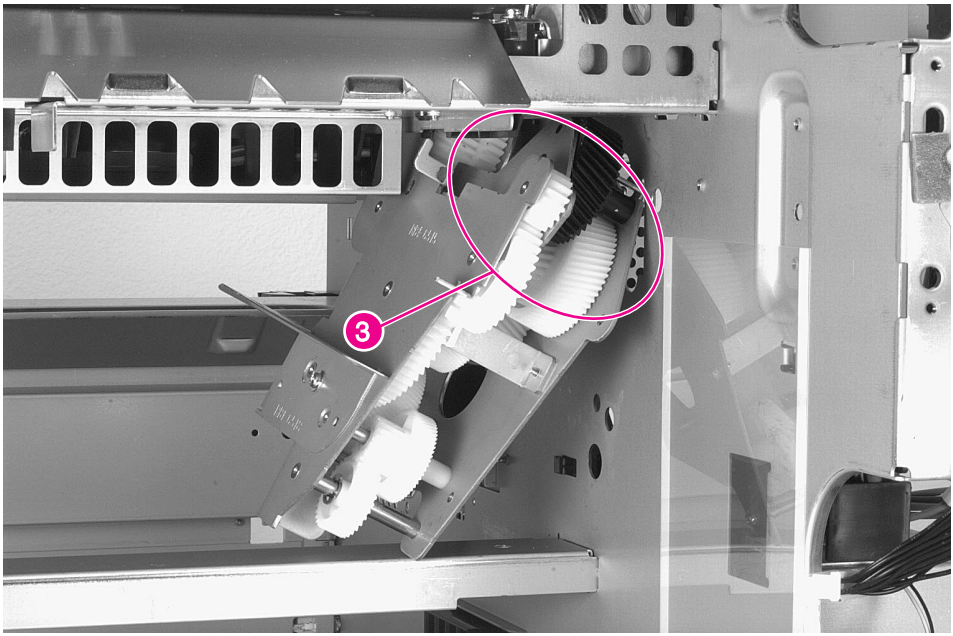

Figure 6-40 **Main Gear Assembly (3 of 3)**

2 Tilt the top of the assembly inward and insert the upper back part of the assembly in place (figure 6-40, callout 3).

3 Continue rotating the assembly upwards into place.

4 Make sure that the locating pins are properly aligned and that the gear assembly fits tightly against the chassis before replacing the screws (figure 6-38, callout 4).

Download Service Manual And Resetter Printer at http://printer1.blogspot.com

Main Motor Assembly

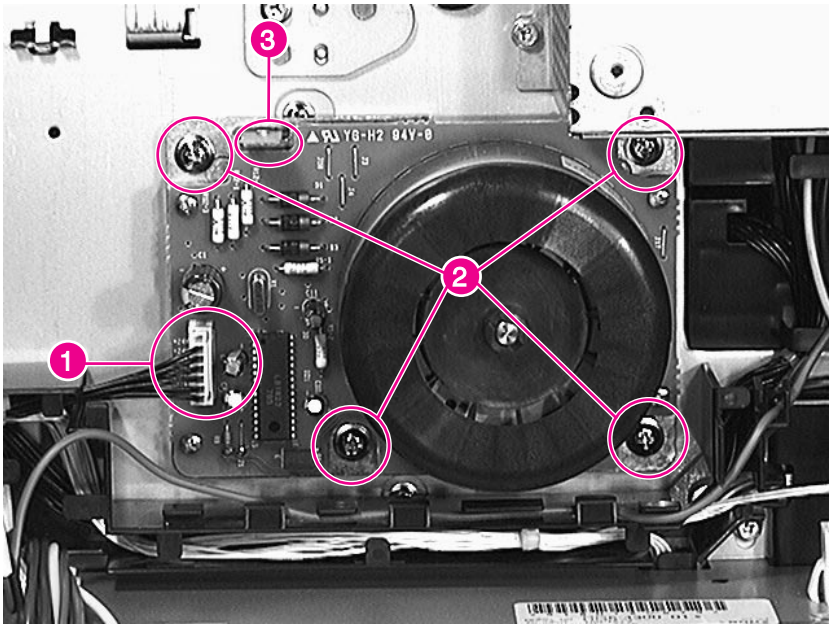

Figure 6-41 **Main Motor**

1 Remove the back cover (see figure 6-6 on page 169).

2 Remove the HVPS (see figure 6-51 on page 219).

3 Unplug the connector (figure 6-41, callout 1).

CAUTION Be careful when removing the Main Motor. The steel drive shaft can damage the plastic gears.

4 Remove 4 screws (figure 6-41, callout 2).

To Reinstall:

Align the Main Motor to the chassis with the locator tab (figure 6-41, callout 3) and the machined ring around the output shaft.

Download Service Manual And Resetter Printer at http://printer1.blogspot.com

Paper Input Unit (PIU)

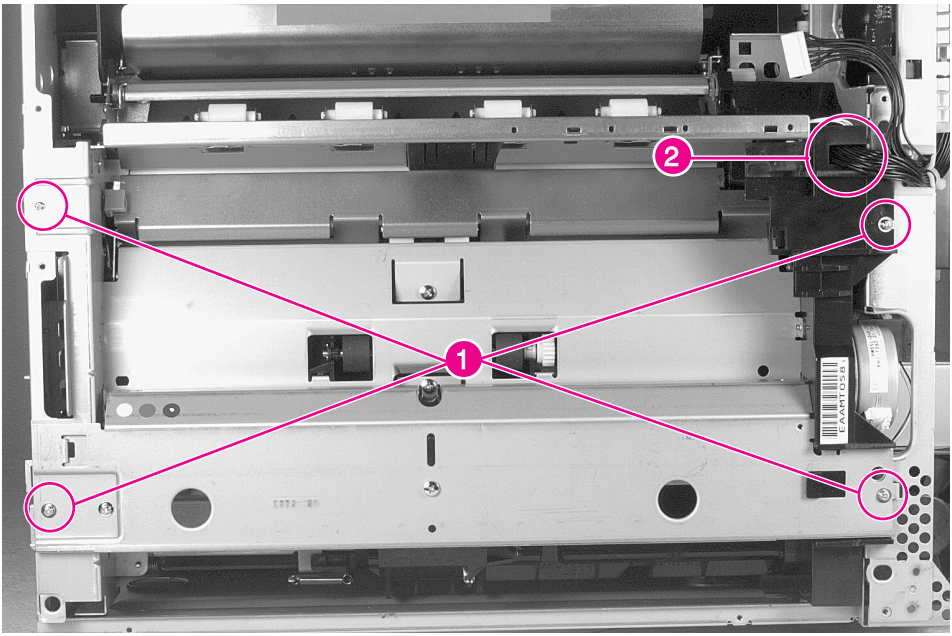

Figure 6-42 **Paper Input Unit**

1. Remove Tray 2 and Tray 3. Remove both trays to prevent damage to the PIU plastic sensor flags.
2. Remove the back cover (see figure 6-6 on page 169).
3. Remove the Tray 1 Pickup Assembly (see figure 6-29 on page 194).
4. Remove the Right Lower Door Assembly (see figure 6-16 on page 181).
5. Remove 4 screws (figure 6-42, callout 1).
6. Slide the assembly out from the chassis approximately 3 inches, and unplug the connector inside the right end (figure 6-42, callout 2).
7. Continue sliding the assembly out of the chassis.

To Reinstall:

Make sure that Trays 2 and 3 are removed when reinstalling the Paper Input Unit.

Download Service Manual And Resetter Printer at http://printer1.blogspot.com

PCA, DC Controller

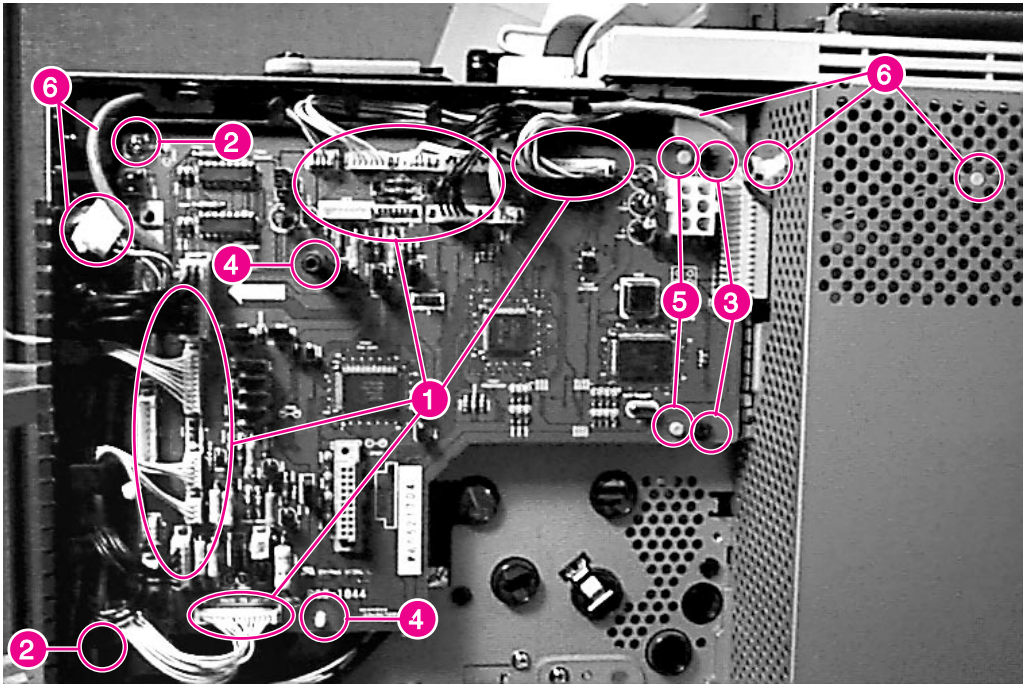

Figure 6-43 **DC Controller PCA**

1 Remove the Formatter Assembly (see figure 6-35 on page 201).

2 Remove the back cover (see figure 6-6 on page 169).

3 Remove the High Voltage Power Supply (see figure 6-51 on page 219).

4 Unplug 19 connectors from the PCA (figure 6-43, callout 1).

5 Remove 2 screws (figure 6-43, callout 2) from the left side of the PCA and 2 self-tapping screws (figure 6-43, callout 3) from the right side of the PCA.

6 Release two retaining clips (figure 6-43, callout 4) and carefully tip the left side of the PCA outward to clear the Formatter PCA connector from the card cage.

To Reinstall:

Make sure the retaining clip posts (figure 6-43, callout 4) and the two locator pins (figure 6-43, callout 5) are properly aligned.

Download Service Manual And Resetter Printer at http://printer1.blogspot.com

Output Paper Sensor PCA

1 Remove the following components in the order listed:

- Toner Cartridge
- Formatter Assembly (see figure 6-35 on page 201)
- AC Access Cover (see figure 6-5 on page 168)
- Top Cover (see figure 6-10 on page 173)
- Back Cover (see figure 6-6 on page 169)
- Fan 3 and Housing Assembly (see figure 6-22 on page 187)
- High Voltage Power Supply (HVPS) (see figure 6-51 on page 219)
- DC Controller PCA (see figure 6-43)

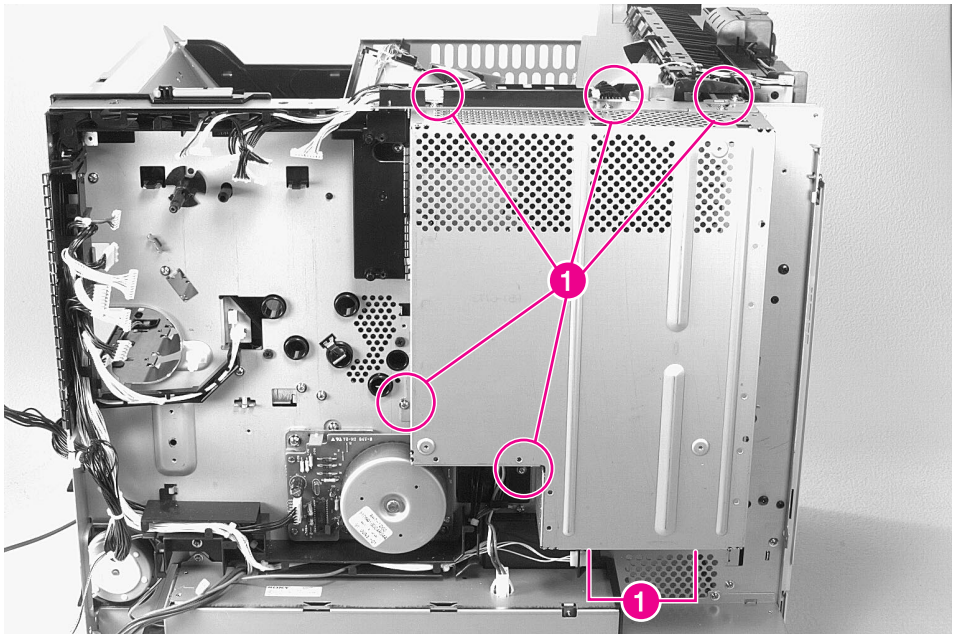

Figure 6-44 **Output Paper Sensor PCA (1 of 4)**

2 Remove 7 screws (figure 6-44, callout 1), and remove the Formatter PCA cage.

Download Service Manual And Resetter Printer at http://printer1.blogspot.com

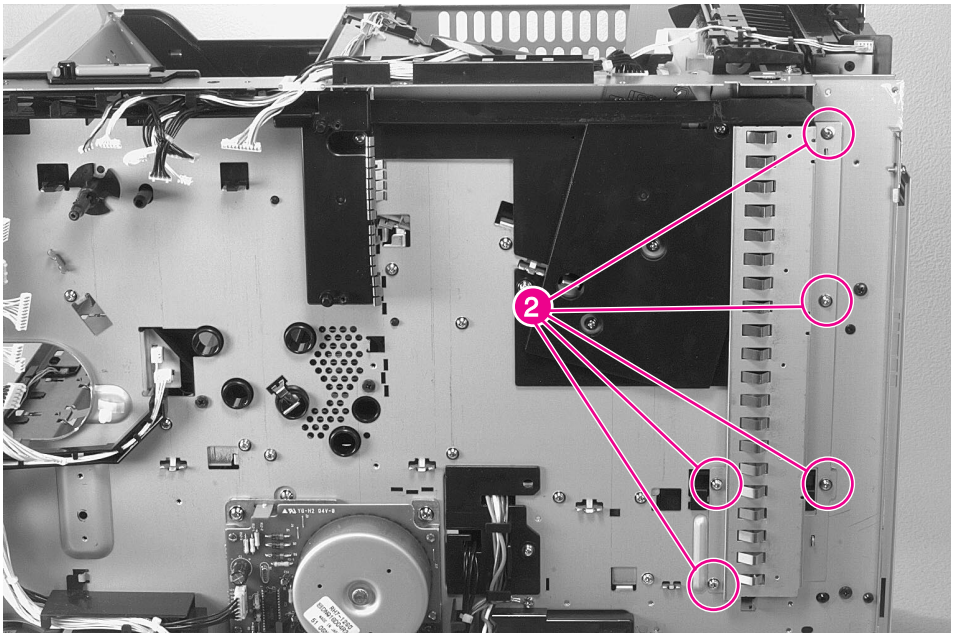

Figure 6-45 **Output Paper Sensor PCA (2 of 4)**

3 Remove 5 screws (figure 6-45, callout 2), and remove the Formatter PCA grounding strip.

Download Service Manual And Resetter Printer at http://printer1.blogspot.com

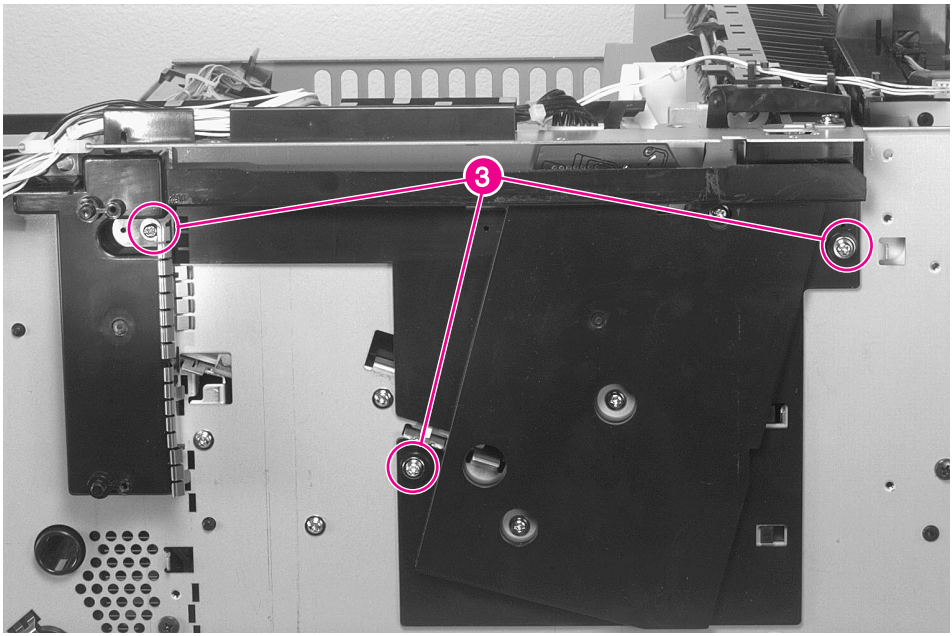

Figure 6-46 **Output Paper Sensor PCA (3 of 4)**

4 Remove 3 screws (figure 6-46, callout 3), and remove the plastic PCA shield. (Note the positioning of the metal grounding fingers at the left of the shield.)

Download Service Manual And Resetter Printer at http://printer1.blogspot.com

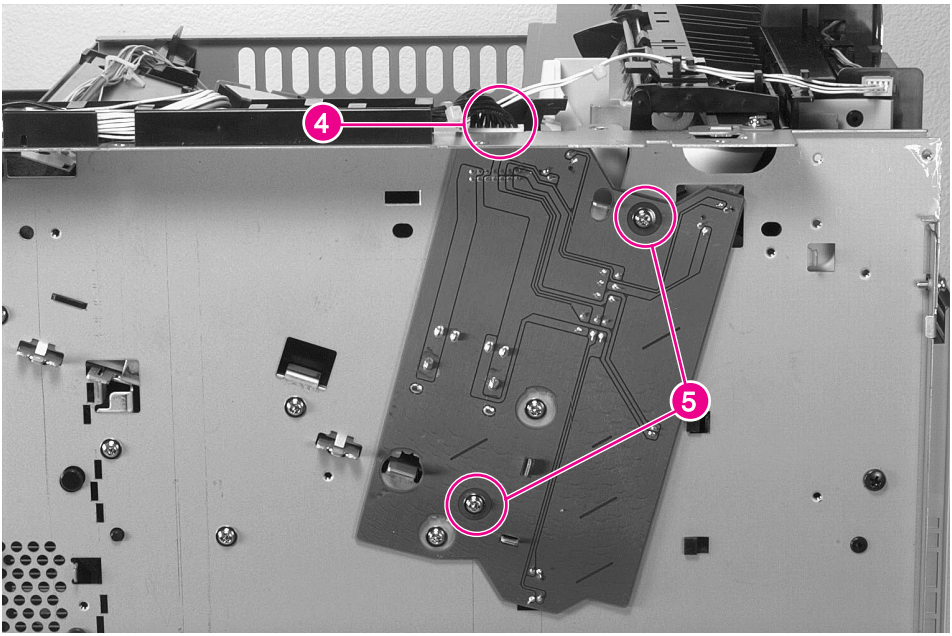

Figure 6-47 **Output Paper Sensor PCA (4 of 4)**

5 Unplug the connector (figure 6-47, callout 4).

6 Remove 2 screws (figure 6-47, callout 5), and unplug the connector on the back side of the PCA.

To Reinstall:

Make sure that the sensor flags rotate freely and that the top cover and Diverter doors operate the microswitch (SW1401).

Download Service Manual And Resetter Printer at http://printer1.blogspot.com

Paper Size PCA

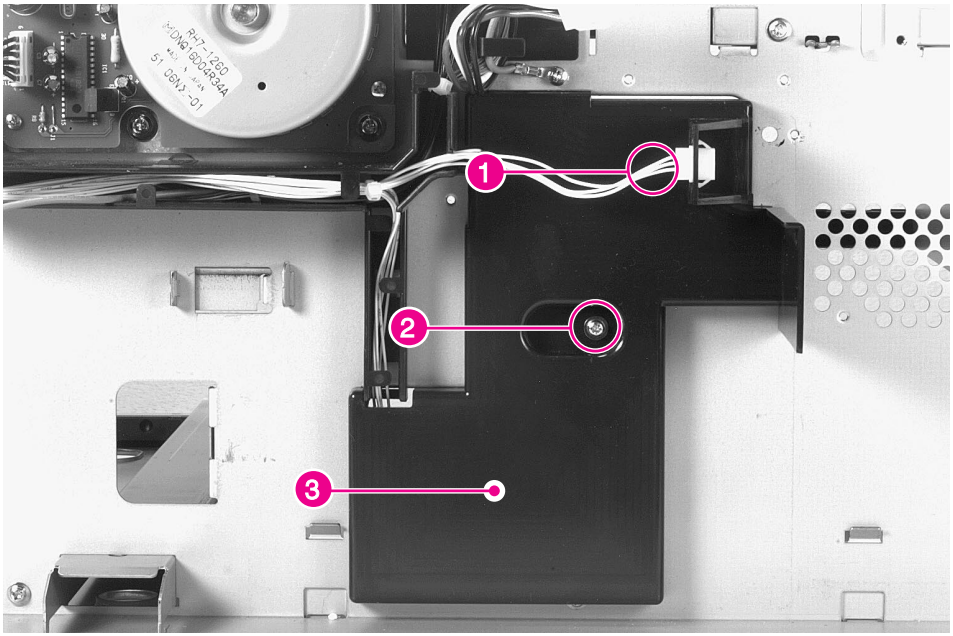

Figure 6-48 **Paper Size PCA (1 of 3)**

1 Remove the following components in the order listed:

- Toner Cartridge
- Trays 2 and 3
- Back Cover (see figure 6-6)
- Low Voltage Power Supply (LVPS) (see figure 6-52)

2 Unplug the fan cable from the left side of the connector (figure 6-48, callout 1), remove 1 screw (figure 6-48, callout 2), and remove the plastic shield (figure 6-48, callout 3).

Download Service Manual And Resetter Printer at http://printer1.blogspot.com

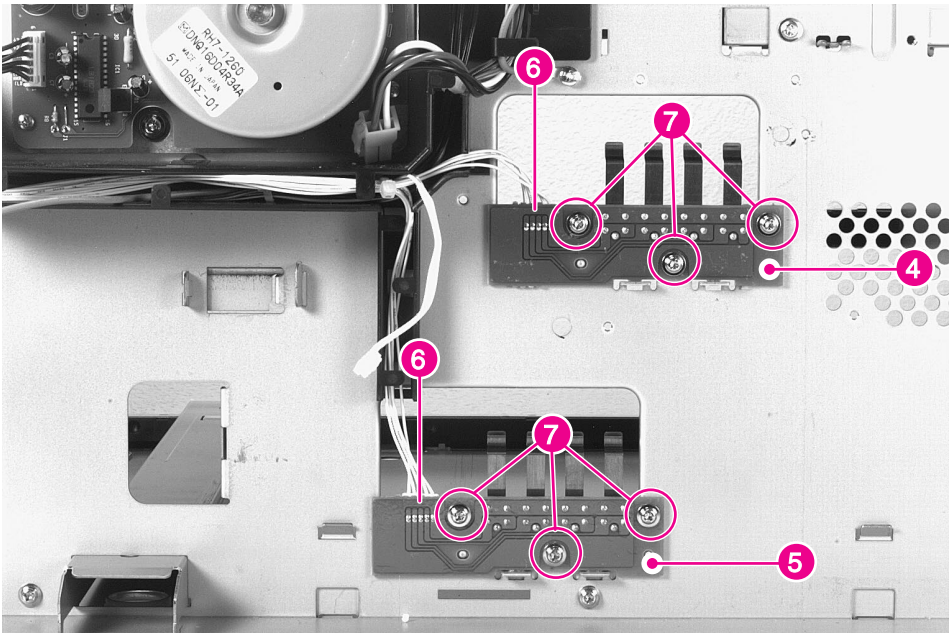

Figure 6-49 **Paper Size PCA (2 of 3)**

Note The Paper Size PCA for Tray 2 (figure 6-49, callout 4) is identical to the PCA for Tray 3 (figure 6-49, callout 5). The removal procedure for both PCAs is the same.

3 Unplug the connector (figure 6-49, callout 6), remove 3 screws (figure 6-49, callout 7), and remove the PCA and actuating fingers.

Download Service Manual And Resetter Printer at http://printer1.blogspot.com

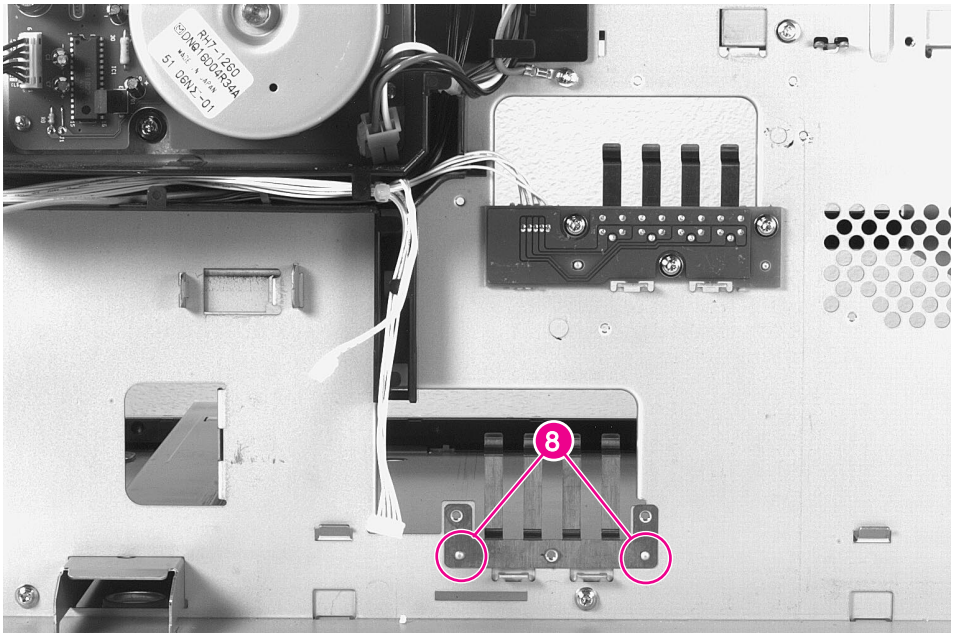

Figure 6-50 **Paper Size PCA (3 of 3)**

To Reinstall:

Make sure that the actuating fingers are aligned with the locating pins (figure 6-50, callout 8).

Download Service Manual And Resetter Printer at http://printer1.blogspot.com

High Voltage Power Supply (HVPS)

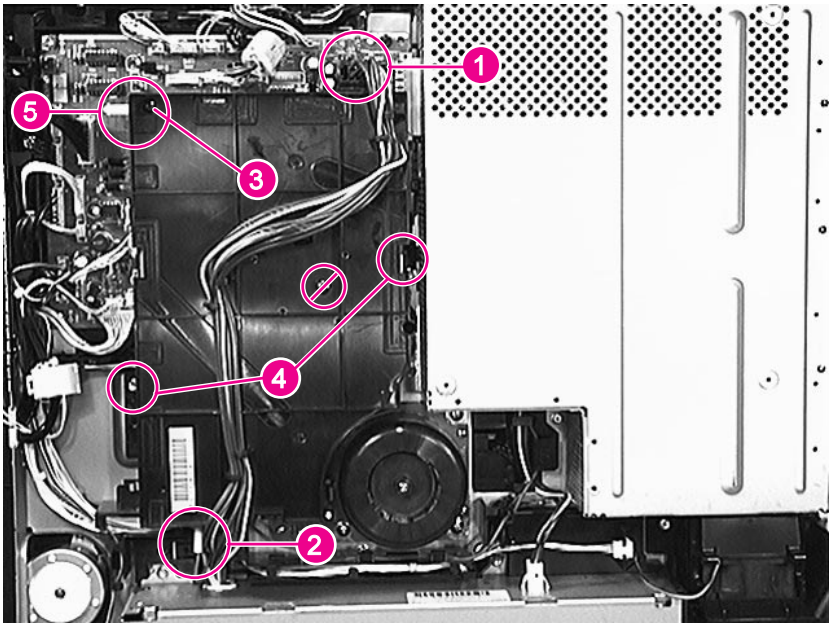

Figure 6-51 **High Voltage Power Supply**

1. Remove the back cover (see figure 6-6 on page 169).
2. Unplug the cable from the LVPS to the DC Controller PCA (figure 6-51, callout 1), and move it out of the way.
3. Unplug the connector from the bottom of the HVPS (figure 6-51, callout 2).

Note Do NOT remove the screw indicated in Figure 6-51, beneath the null symbol

4. Remove 1 self-tapping screw (figure 6-51, callout 3) and 2 screws (figure 6-51, callout 4).

To Reinstall:

Make sure that the plastic alignment pin (figure 6-51, callout 5), the connector pins, and the high voltage contacts are properly aligned before replacing the screws.

Download Service Manual And Resetter Printer at http://printer1.blogspot.com

Low Voltage Power Supply (LVPS)

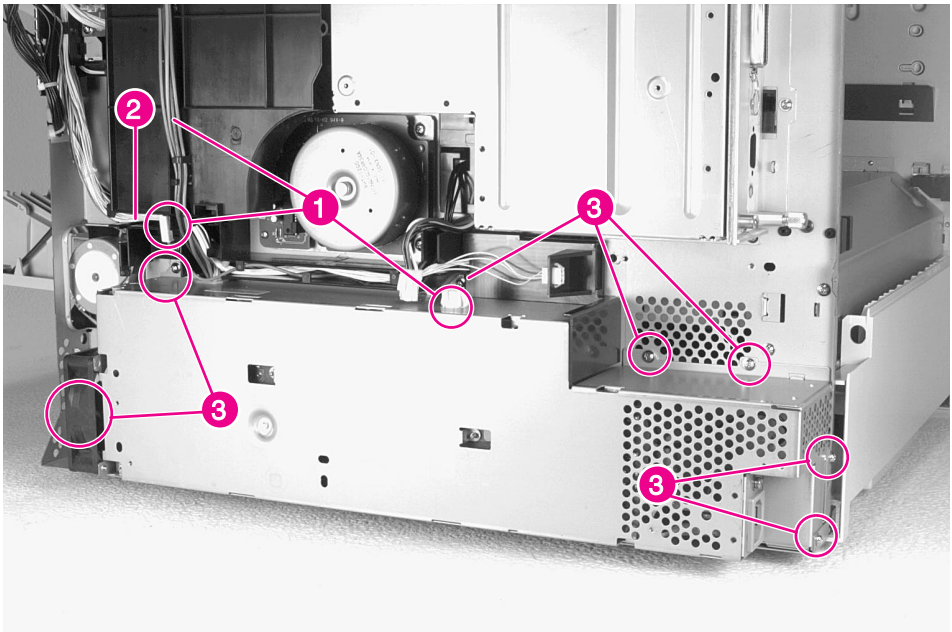

Figure 6-52 **Low Voltage Power Supply**

1. Remove the Formatter Assembly (see figure 6-35 on page 201).
2. Remove the back cover (see figure 6-6 on page 169).
3. Remove Fan 3 and its Housing Assembly (see figure 6-22).
4. Unplug 3 LVPS connectors (figure 6-52, callout 1).
5. Unplug the LVPS fan (FM1) cable from the DC Controller (figure 6-52, callout 2).
6. Remove 7 screws (figure 6-52, callout 3).

Download Service Manual And Resetter Printer at http://printer1.blogspot.com

Registration Assembly

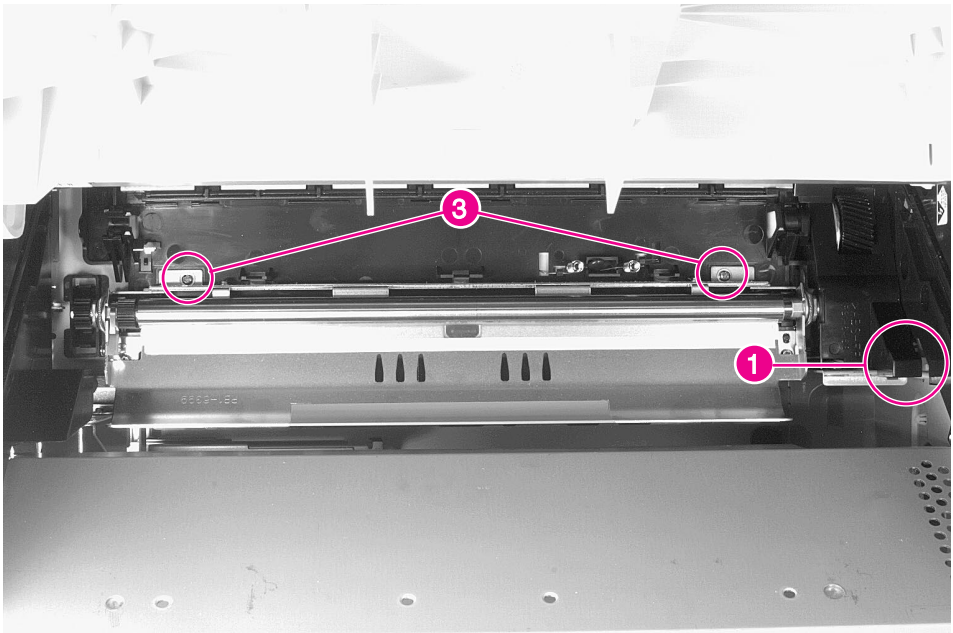

Figure 6-53 **Registration Assembly (1 of 3)**

1. Open the top cover door and remove the toner cartridge.
2. Remove the Transfer Roller Assembly (see figure 6-62 on page 232).
3. Remove the Main Gear Train Shield. Release the retainer clip (figure 6-53, callout 1), and lift the forward end up.
4. Remove 2 screws at rear of assembly (figure 6-53, callout 3).

Download Service Manual And Resetter Printer at http://printer1.blogspot.com

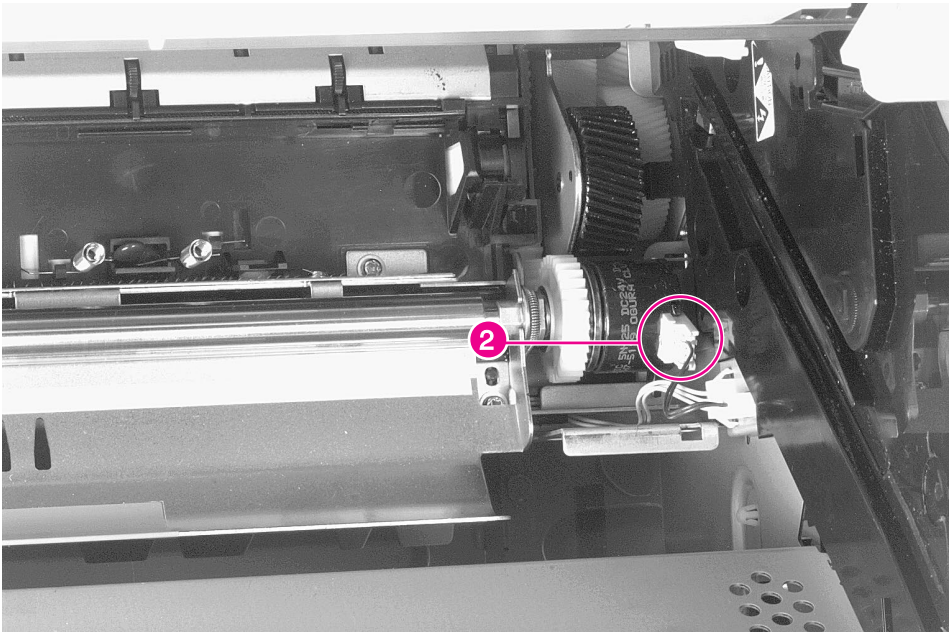

Figure 6-54 **Registration Assembly (2 of 3)**

5 Unplug the clutch cable from the clutch on the right end of the Registration Assembly (figure 6-54, callout 2).

Download Service Manual And Resetter Printer at http://printer1.blogspot.com

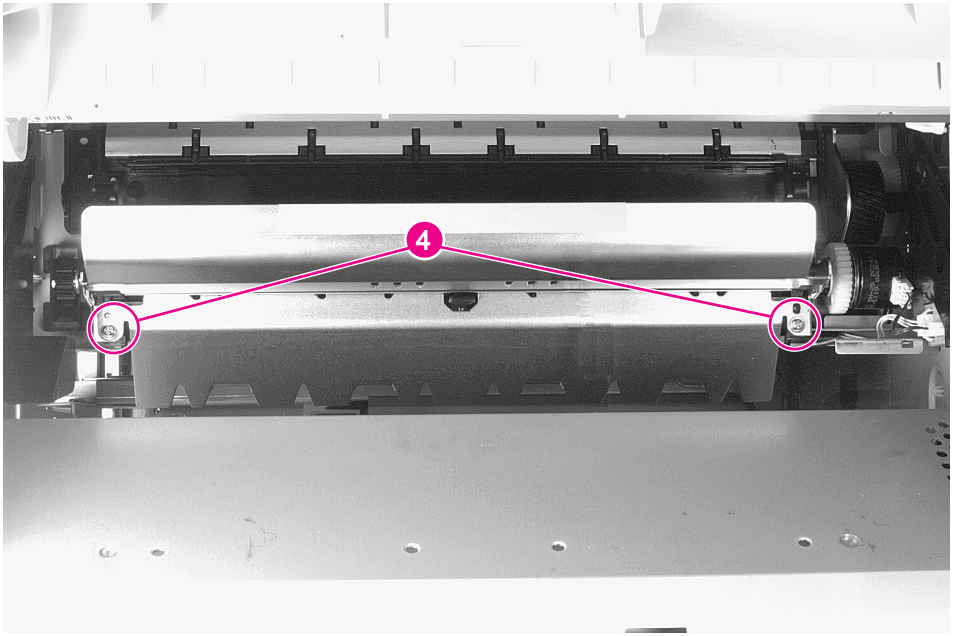

Figure 6-55 **Registration Assembly (3 of 3)**

6 Lift the registration guide and remove 2 screws at the front of the assembly (figure 6-55, callout 4).

To Reinstall:

1 Lift the registration guide, and place the Registration Assembly into position.

2 Lift the registration guide and make sure that the locator pin near the right screw is properly positioned.

3 Make sure that the grounding strap is under the left screw.

4 Be sure to connect the clutch cable connector.

5 After replacing the 4 screws, replace the Main Gear Train Shield. Tilt the top outward, reinstall the lower tabs in place, and snap the cover down into position.

Download Service Manual And Resetter Printer at http://printer1.blogspot.com

Tray 1 Feed Roller and Separation Pad

Feed Roller

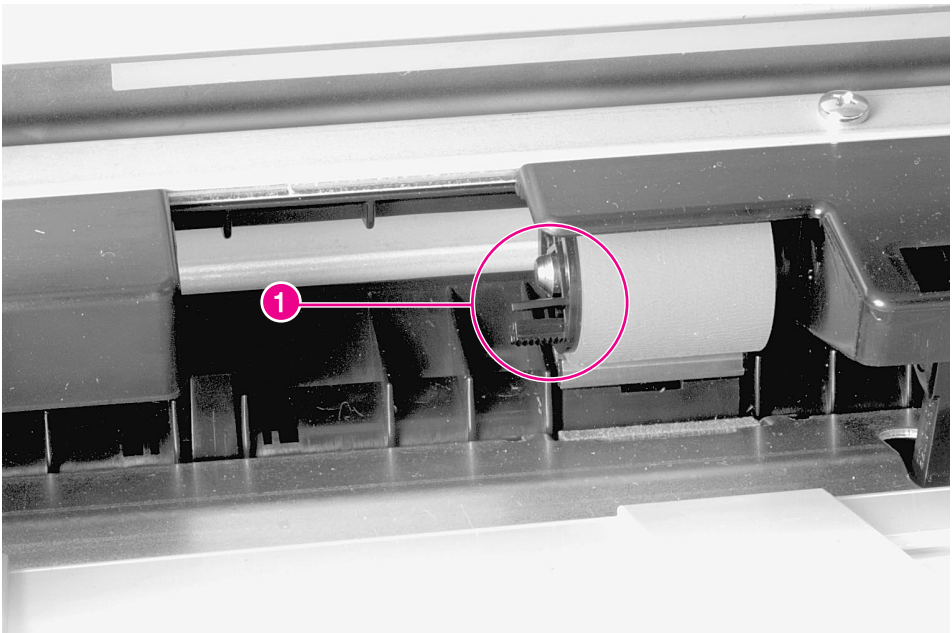

Figure 6-56 **Tray 1 Feed Roller**

1. Open the Tray 1 door, and remove the plastic shield.
2. Pinch the retainer tabs together (figure 6-56, callout 1), and slide the roller to the left off of the shaft.

Download Service Manual And Resetter Printer at http://printer1.blogspot.com

Tray 1 Separation Pad

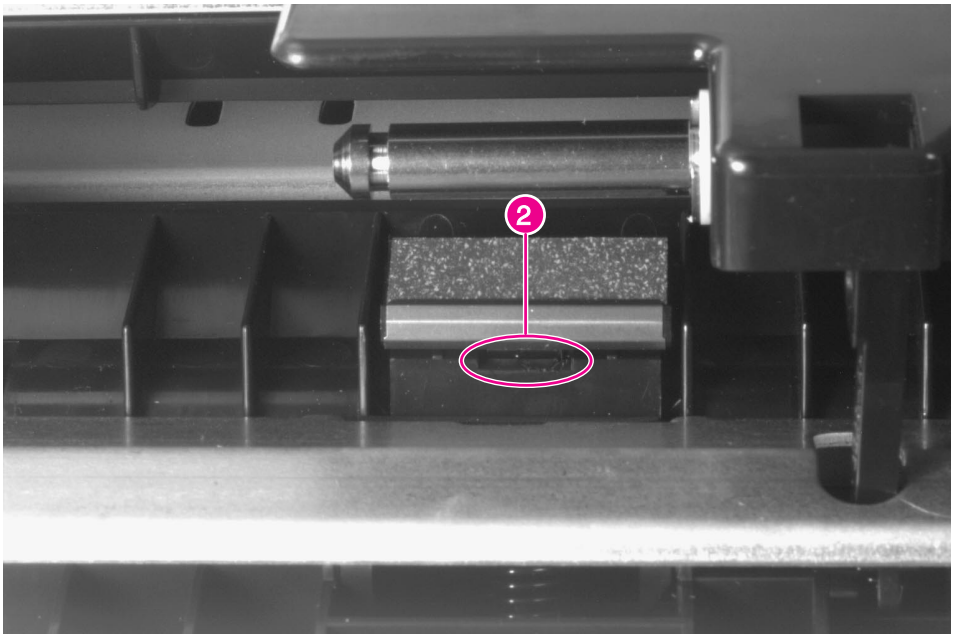

Figure 6-57 **Tray 1 Separation Pad**

1. Open the Tray 1 door, and remove the Feed Roller.
2. Insert a flat-bladed screwdriver into the slot (figure 6-57, callout 2), and carefully pry the separation pad upwards out of its retaining notches.

To Reinstall:

Make sure the metal edge of the Separation Pad faces forward.

Download Service Manual And Resetter Printer at http://printer1.blogspot.com

Tray 2 and 3 Pickup, Feed, and Separation Rollers

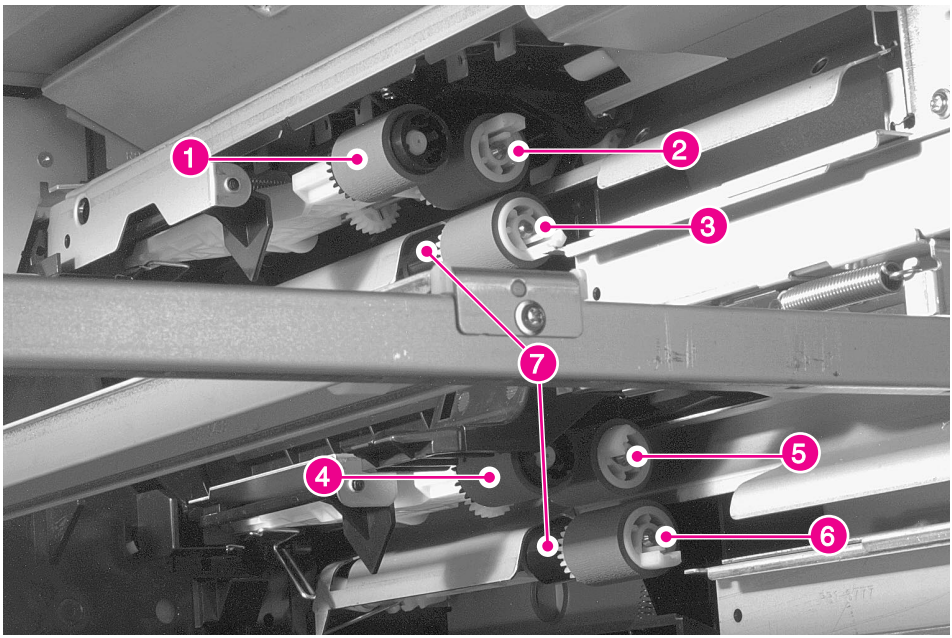

Figure 6-58 **Tray 2 and 3, Pickup, Feed, and Separation Rollers**

There are three rollers for each tray: the Pickup Roller, the Feed Roller, and the Separation Roller. The Feed and Separation Rollers are interchangeable with each other and between trays. The Pickup Rollers are interchangeable between trays.

- Tray 2 Pickup Roller: figure 6-58, callout 1
- Tray 2 Feed Roller: figure 6-58, callout 2
- Tray 2 Separation Roller: figure 6-58, callout 3
- Tray 3 Pickup Roller: figure 6-58, callout 4
- Tray 3 Feed Roller: figure 6-58, callout 5
- Tray 3 Separation Roller: figure 6-58, callout 6

Note The Feed and Separation rollers have protruding tabs, and the pickup rollers have recessed retaining tabs. Be careful not to lose the plastic torque limiters located behind the Separation Rollers (figure 6-58, callout 7).

1 Remove trays. From inside the tray cavity, remove the rollers by pinching the retainer tabs together and sliding the roller off the shaft.

Download Service Manual And Resetter Printer at http://printer1.blogspot.com

Paper Input Unit Sensor (PS2)

1 Remove the following components in the order listed:

- Toner Cartridge
- Trays 2 and 3
- Transfer Roller (see figure 6-62 on page 232)
- Registration Assembly (see figure 6-54 on page 222)
- Front Cover (see figure 6-7 on page 170)
- Tray 1 Assembly (see figure 6-26 on page 191)
- Right Lower Door Assembly (see figure 6-16 on page 181)

Note The sensor retaining tabs are released from above, and the sensor is removed and replaced from below.

2 Refer to the following page for the removal and reinstallation procedure for the PS2 sensor.

Download Service Manual And Resetter Printer at http://printer1.blogspot.com

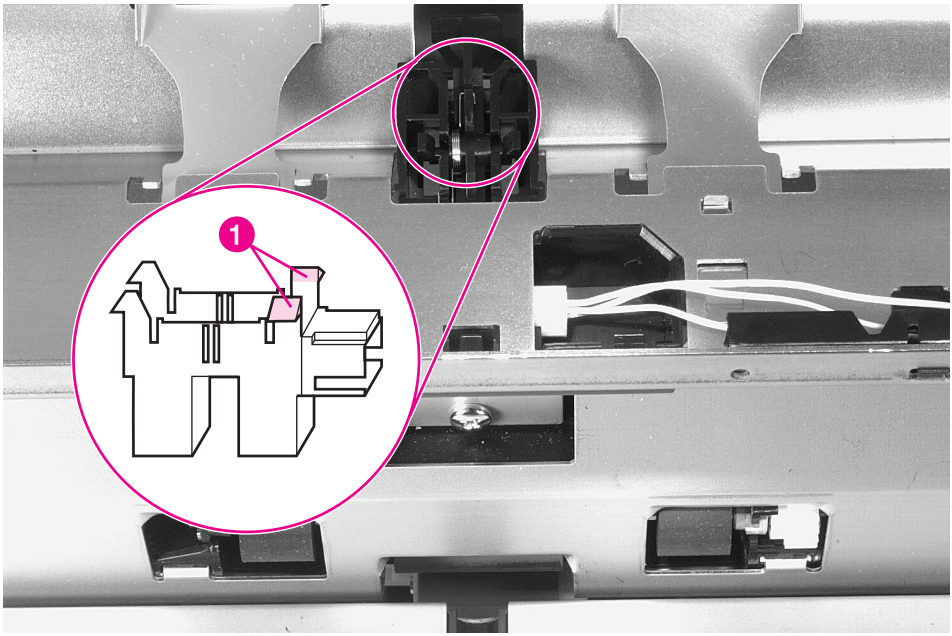

Figure 6-59 **Paper Input Unit Sensor (PS2)**

3 Release the retaining tabs (figure 6-59, callout 1) on the right end of the sensor, and rotate the sensor down to free the tabs on the left end.

4 Unplug the connector from the sensor.

To Reinstall:

1 Plug in the connector before reinstalling.

2 Holding the sensor flag out of the way, first hook the tabs on the left end in first. Snap the right end of the sensor upward into place.

Download Service Manual And Resetter Printer at http://printer1.blogspot.com

Registration Sensor (PS1)

1 Remove the following components in the order listed:

- Toner Cartridge
- Trays 2 and 3
- Transfer Roller (see figure 6-62 on page 232)
- Registration Assembly (see figure 6-54 on page 222)
- Front Cover (see figure 6-7 on page 170)
- Tray 1 Assembly (see figure 6-26 on page 191)
- Right Lower Door Assembly (see figure 6-16 on page 181)
- Paper Input Unit (see figure 6-42 on page 210)

Note The sensor retaining tabs are released from above, and the sensor is removed and replaced from inside the Paper Input Unit cavity.

2 Follow the procedure on the following page to remove and reinstall the PS1 sensor.

Download Service Manual And Resetter Printer at http://printer1.blogspot.com

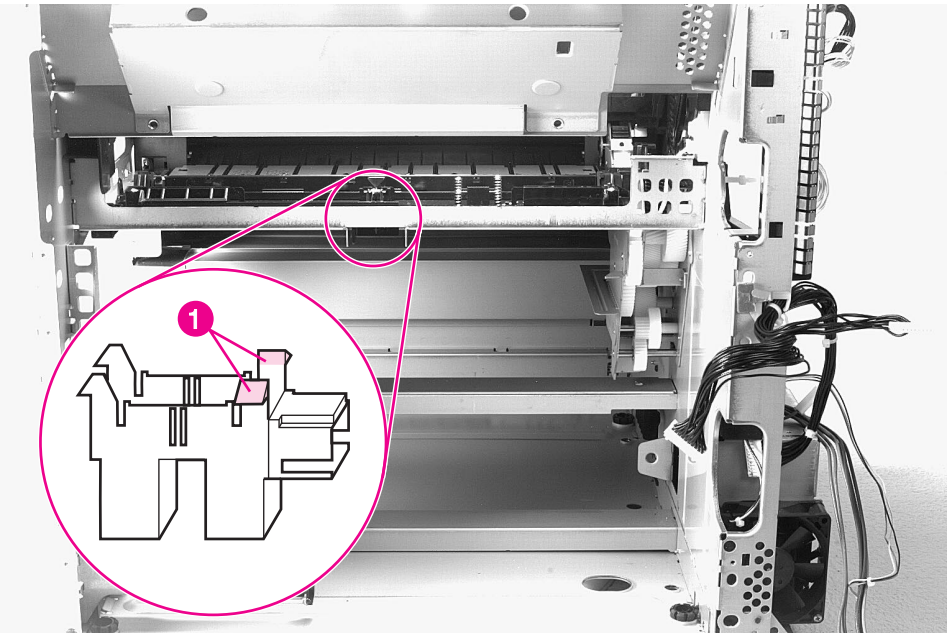

Figure 6-60 **Registration Sensor (PS1)**

3 Release the retaining tabs (figure 6-60, callout 1) on the right end of the sensor and rotate the sensor down to free the tabs on the left end of the sensor.

4 Unplug the connector from the sensor.

To Reinstall:

1 Plug in the connector.

2 Holding the sensor flag out of the way, first hook the tabs on the left end in first. Snap the right end of the sensor upward into place.

Download Service Manual And Resetter Printer at http://printer1.blogspot.com

Face-up Solenoid Assembly (SL3)

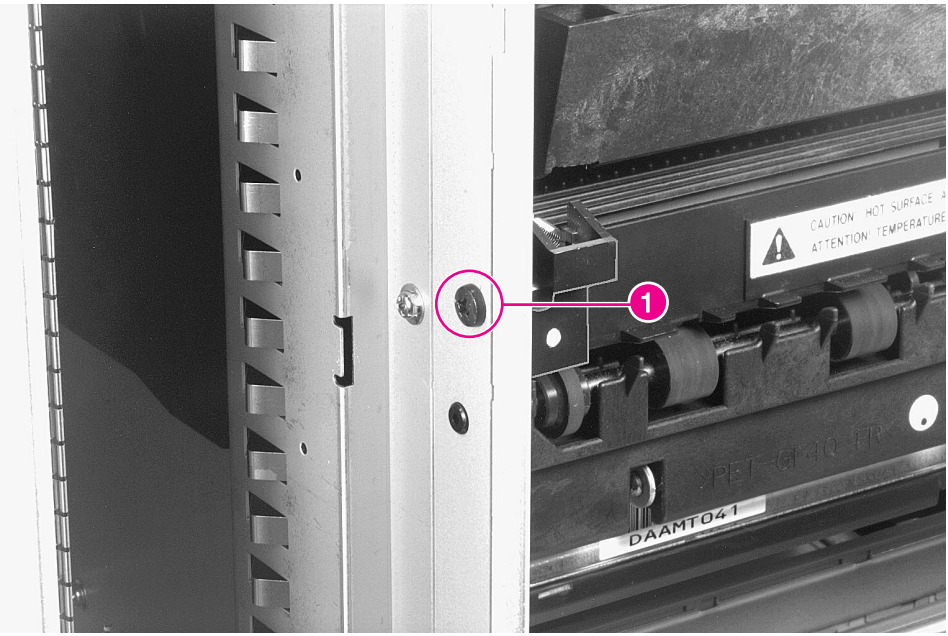

Figure 6-61 **Face-up Solenoid Assembly, SL3**

1. Remove the top cover (see figure 6-10 on page 173).
2. Remove the Delivery Unit (see figure 6-12 on page 176).
3. Remove 1 self-tapping screw (figure 6-61, callout 1).

CAUTION Be careful not to damage the plastic arm when removing the assembly.

4. Pull the forward end of the assembly away from the chassis to clear the locating pin, and slide it forward to clear two retaining tabs.

Download Service Manual And Resetter Printer at http://printer1.blogspot.com

Transfer Roller Assembly

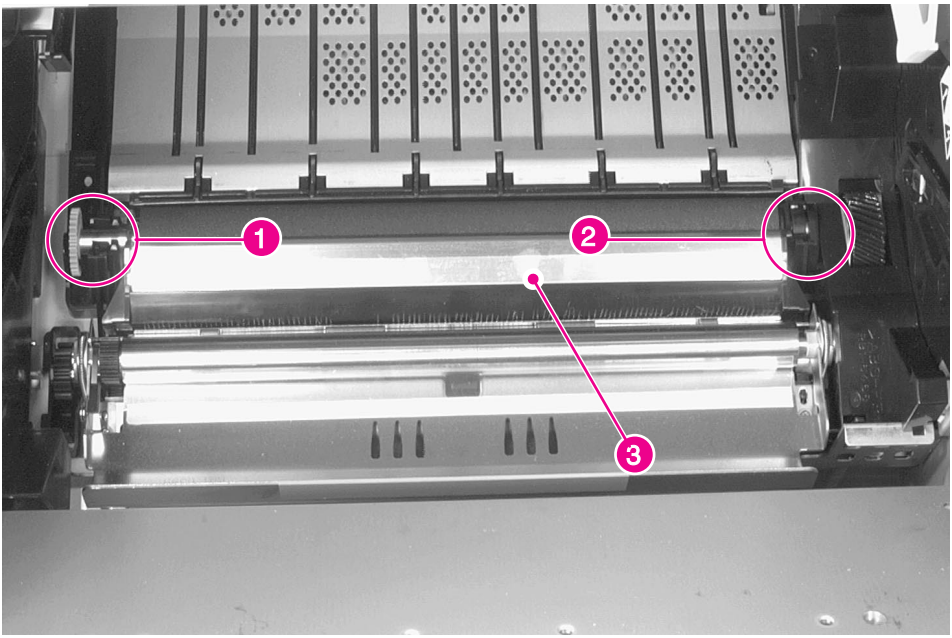

Figure 6-62 **Transfer Roller Assembly**

CAUTION Handle the Transfer Roller from the ends only. Do not touch the surface of the Transfer Roller. Skin oils will affect its electrical characteristics, resulting in poor image transfer.

1. Open the top cover door, and remove the toner cartridge.
2. Grasp the gear (figure 6-62, callout 1) on the left end, and carefully lift upward just enough to clear the retainer clip.
3. Slide the Transfer Roller Assembly to the left to release the shaft on the right end (figure 6-62, callout 2).

Download Service Manual And Resetter Printer at http://printer1.blogspot.com

To Reinstall:

1. Place the right end of the shaft into its retaining cavity.
2. Hold the Transfer Roller wiper up (figure 6-62, callout 3) and slide the assembly to the right until the gear on the left end is in position.
3. Carefully press the left end of the shaft into the retainer clip.
4. Press the Transfer Roller wiper down (figure 6-62, callout 3) until the retaining clips snap into place.

Download Service Manual And Resetter Printer at http://printer1.blogspot.com

Tray 2 and 3 Assemblies

Note The paper trays are mechanically aligned to the printer chassis at the factory. If you are replacing Tray 2 or Tray 3 with a tray other than the original factory installed unit, you may have to adjust the new tray. For details, see “Tray Adjustment Procedure” on page 90.

1. Open the tray, and pull it out to the stop.
2. Press the colored tab at the right side of the tray, and continue to pull the tray slightly upwards and out of the chassis.

To Reinstall:

1. Align the left rear corner of the tray and the locating track at the lower rear center of the tray with their respective guides, and insert the tray no more than two inches into the chassis.
2. Carefully lift up on the outer end of the tray while pulling the tray stop mechanism, located at the right rear of the tray opening, out and over the tray roller and guide assembly.
3. Carefully slide the tray into the printer until it latches into place.

Download Service Manual And Resetter Printer at http://printer1.blogspot.com

2000-sheet Input Tray Removal and Replacement

WARNING! For the procedures in this section, the printer and all paper-handling devices must be unplugged. Before attempting to service the 2000-sheet Input Tray, unplug the power cord from the power source; otherwise, severe injury may result.

The printer and paper-handling devices may have sharp edges that could cause injury.

Note Reinstallation is generally the reverse of the removal process. Carefully follow any additional instructions provided under “To Reinstall.”

Orientation - 236
Front Cover - 237
Back Cover- 238
Left Cover - 239
Right Cover - 240
Main Drive Assembly - 241
Paper Tray - 243
Main Cable Harness - 244
Controller PCA - 246
Front LED PCA Assembly - 248
Pickup Assembly - 250
Power Supply - 252
Pickup, Feed, and Separation Rollers - - - - - - - - - - - - - 254
Paper Quantity Switch Assembly - - - - - - - - - - - - - - - 257
Paper Size Switch Assembly - - - - - - - - - - - - - - - - - 257
Vertical Transfer Unit (VTU) - - - - - - - - - - - - - - - - - 259
Tension Springs - 261
Locating Pins- 262
Casters and Stabilizing Feet - - - - - - - - - - - - - - - - - 263
Adjustable Foot- 264

Download Service Manual And Resetter Printer at http://printer1.blogspot.com

Orientation

Figure 6-63 shows the orientation of the 2000-sheet Input Tray as it is referred to in this section.

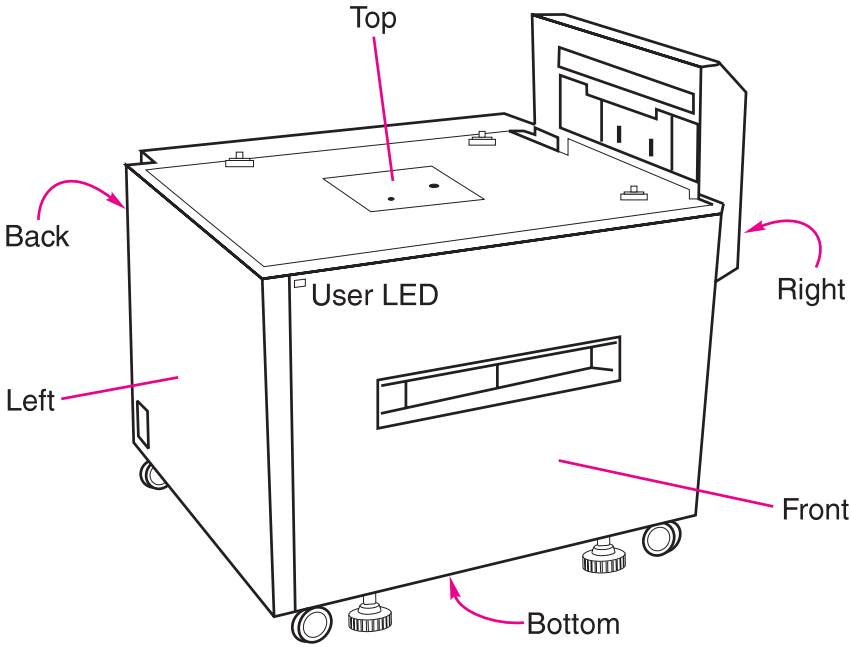

Figure 6-63 **2000-sheet Input Tray Orientation**

To remove the 2000-sheet Input Tray from the printer, see page 157.

Download Service Manual And Resetter Printer at http://printer1.blogspot.com

Front Cover

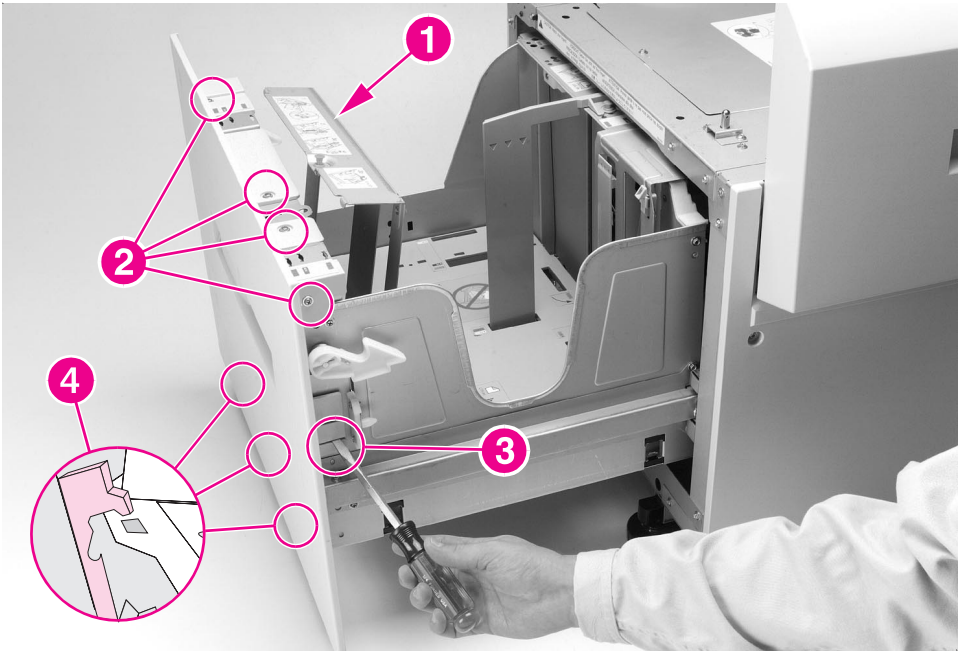

Figure 6-64 **2000-sheet Input Tray Front Cover**

1. Open the paper tray on the 2000-sheet Input Tray to the stops (figure 6-64).
2. Remove the Paper Limit Back Plate from the paper tray (callout 1).
3. Remove the 4 screws in the front of the tray: 3 screws at the top of the tray and 1 screw on the front-right side of the tray (callout 2).
4. Using a flat-blade screwdriver, release the plastic retaining tabs at the left- and right-front sides of the tray (callout 3).
5. Carefully lift up on the Front Cover, and then pull it out to release the plastic retaining tabs that secure the bottom of the Front Cover to the tray chassis (callout 4).

To Reinstall:

1. Replace all the plastic retaining tabs properly (callout 4).
2. Reinstall the front adjustable plate, and configure it properly (callout 1). Reinstall the tray size labels.

Download Service Manual And Resetter Printer at http://printer1.blogspot.com

Back Cover

1 Make sure that the power cord for the 2000-sheet Input Tray is unplugged from the power source.

2 Remove the 4 screws that secure the Back Cover of the 2000-sheet Input Tray to the chassis: 1 screw on each corner (figure 6-65, callout 1).

3 Pull the Back Cover out from the chassis.

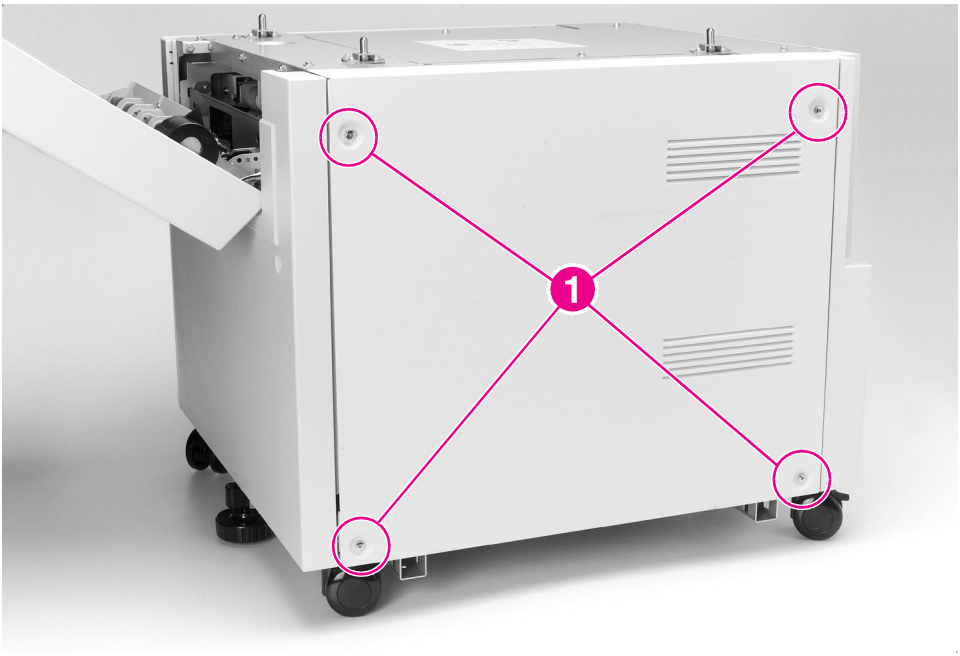

Figure 6-65 **2000-sheet Input Tray Back Cover**

To Reinstall:

1 Insert the tab on the lower-left corner into its alignment slot.

Download Service Manual And Resetter Printer at http://printer1.blogspot.com

Left Cover

1 Unplug the power cord and the C-link interface cables from the 2000-sheet Input Tray.

2 Remove the 2 screws that are located at the top of the 2000-sheet Input Tray's Left Cover: 1 screw near each corner (figure 6-66, callout 1).

3 Remove the Left Cover from the unit:

   a Pull out on the top of the Left Cover, and then lift up on the Left Cover's right side to clear the retaining tabs that are along the Left Cover's bottom edge (callout 2).

   b Pull out on the Left Cover's lower-left corner to release the plastic retainer tab that secures that corner of the cover to the chassis (callout 3).

To Reinstall:

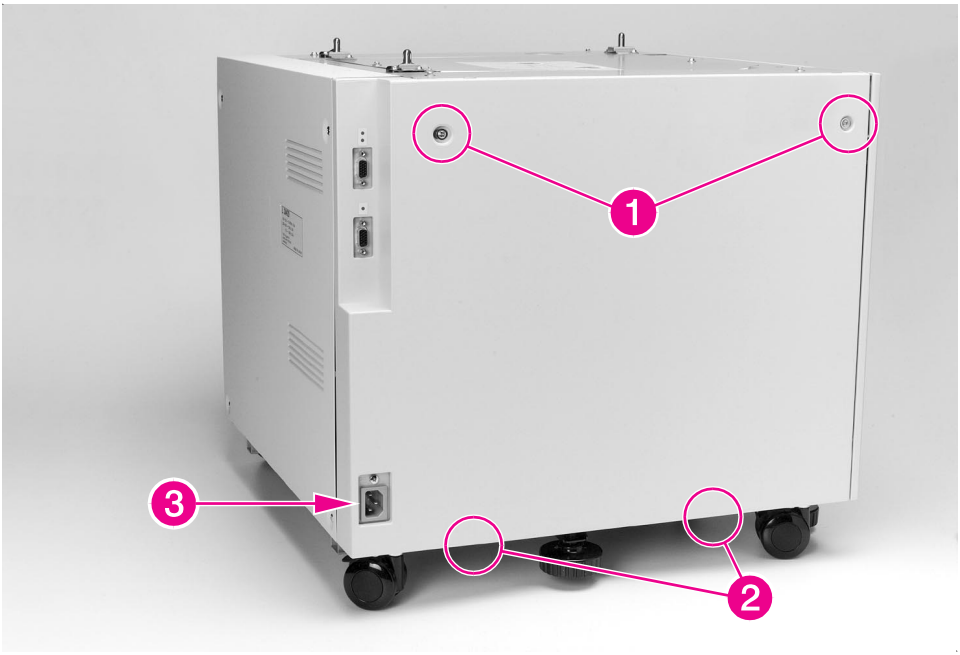

Figure 6-66 **2000-sheet Input Tray Left Cover**

1 Replace the left side of the Left Cover first (callout 3).

2 Tilt the right side of the Left Cover down and toward the chassis to place the lower retaining tabs over the chassis rail (callout 2).

Download Service Manual And Resetter Printer at http://printer1.blogspot.com

Right Cover

1. Remove the Vertical Transfer Unit (VTU) from the 2000-sheet Input Tray (see figure 6-78).
2. Remove the 2 screws that are located near the middle of the 2000-sheet Input Tray's Right Cover: 1 screw on each side (figure 6-67, callout 1).
3. Using a flat-blade screwdriver, release the plastic retaining tab that secures the Right Cover's upper-left corner to the chassis (figure 6-67, callout 2).
4. To remove the Right Cover, carefully pull out on the top of the cover while lifting it upward to clear the retaining tabs that are along the cover's bottom edge.

To Reinstall:

1. Place the retaining tabs that are along the Right Cover's bottom edge over the chassis rail.
2. Reinstall the VTU (see figure 6-78).

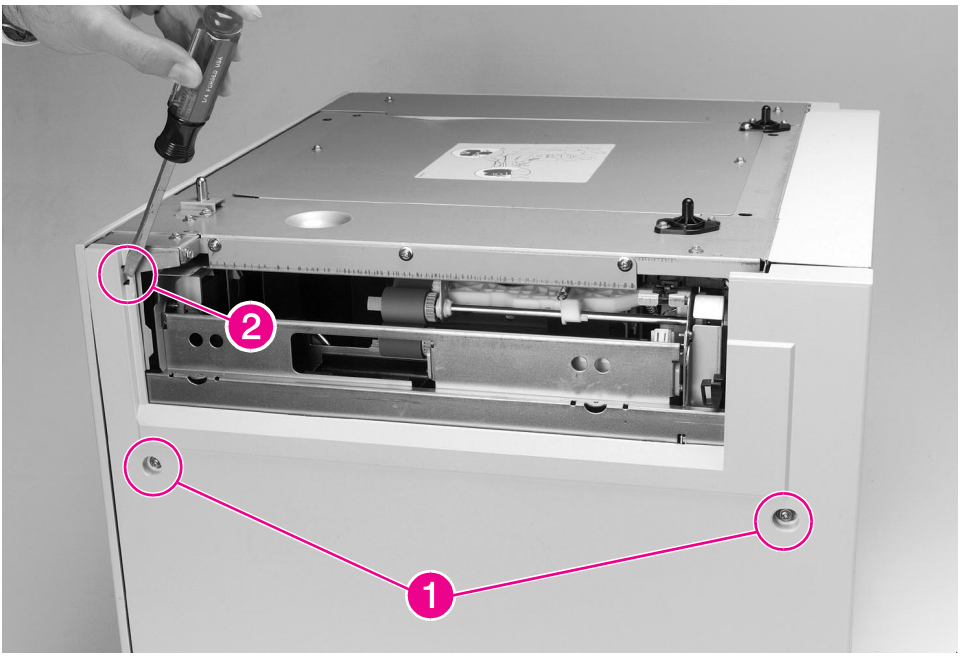

Figure 6-67 **2000-sheet Input Tray Right Cover**

Download Service Manual And Resetter Printer at http://printer1.blogspot.com

Main Drive Assembly

1 Remove the Back Cover from the 2000-sheet Input Tray (see figure 6-65).

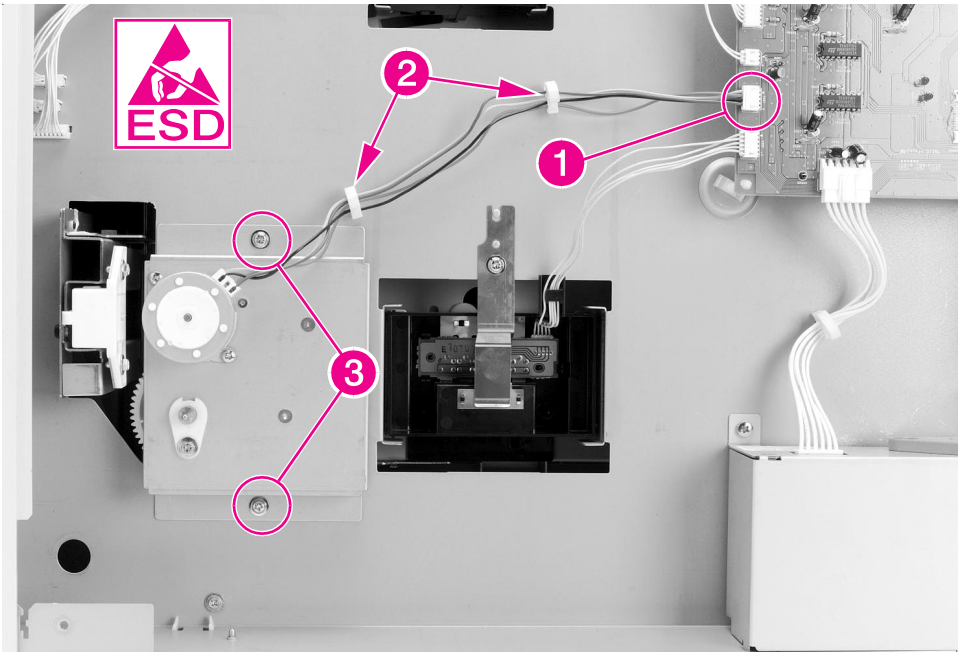

Figure 6-68 **2000-sheet Input Tray Main Drive Assembly**

2 Locate the cable that runs from the Main Drive Assembly on the 2000-sheet Input Tray to the unit's Controller PCA. Disconnect the cable from the J206 connector on the Controller PCA (figure 6-68, callout 1).

3 Release the cable from the 2 cable clips that hold the cable to the chassis (figure 6-68, callout 2).

4 Remove the 2 screws that connect the Main Drive Assembly to the chassis: 1 screw on top of the Main Drive Assembly and 1 screw on the bottom (figure 6-68, callout 3).

5 Pull the Main Drive Assembly away from the chassis.

6 Inspect the Paper Deck Drive Bushing on the Main Drive Assembly. If the bushing is damaged, it can be replaced without replacing the whole drive assembly.

Note Reassembly notes are on the next page.

Download Service Manual And Resetter Printer at http://printer1.blogspot.com

To Reinstall:

1. Reroute the cable through the cable clips (figure 6-68, callout 2) and reconnect the cable to the J206 connector on the Controller PCA (figure 6-68, callout 1).

Download Service Manual And Resetter Printer at http://printer1.blogspot.com

Paper Tray

1 Open the paper tray on the 2000-sheet Input Tray and remove any unused paper.

2 Remove the Vertical Transfer Unit (VTU) from the 2000-sheet Input Tray (see figure 6-78).

3 Remove the Left and Right Covers from the 2000-sheet Input Tray (see figure 6-66 and figure 6-67).

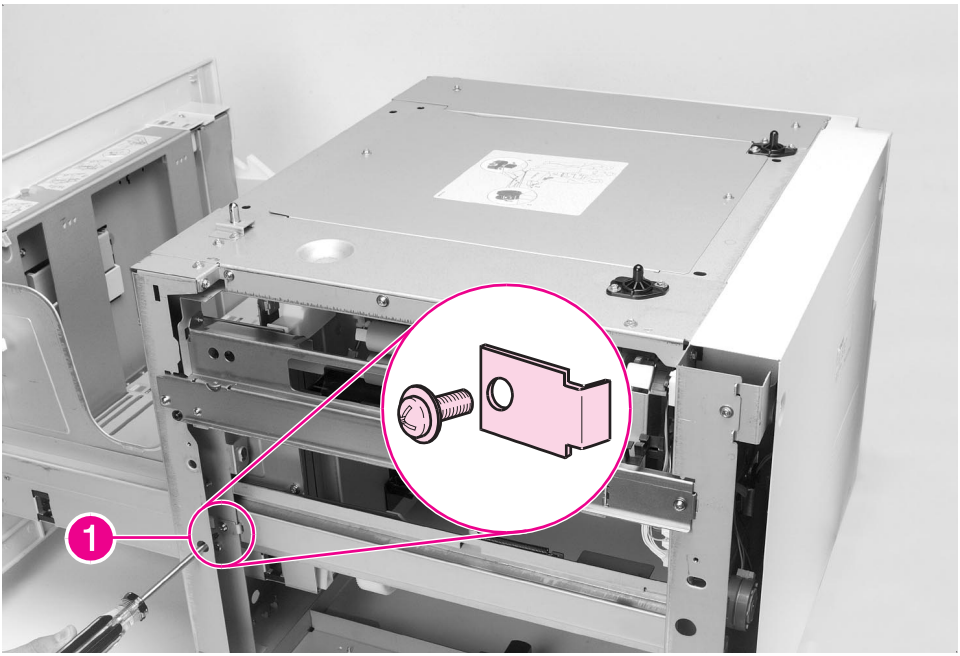

Figure 6-69 **2000-sheet Input Tray Paper Tray**

4 Remove the 2 screws and metal retaining tabs from the sides of the unit's chassis: 1 screw and retaining tab on each side of the chassis (figure 6-69, callout 1).

5 Slide the paper tray straight out of the chassis while carefully supporting the rear of the paper tray.

To Reinstall:

1 Make sure that the retaining tabs are tightly secured to the unit's chassis (figure 6-69, callout 1).

2 After replacing the tray, print a test page. If the print is too close to the paper's edge, adjust the tray.

Download Service Manual And Resetter Printer at http://printer1.blogspot.com

Main Cable Harness

1. Remove the Back Cover from the 2000-sheet Input Tray (see figure 6-65).
2. Locate and disconnect the 6 cable connectors that connect the Main Cable Harness to the Controller PCA on the 2000-sheet Input Tray (figure 6-70, callout 1).
3. Locate and disconnect the 5 cable connectors that connect the Main Cable Harness to the unit's chassis (callout 2).
4. Release the cable harness from the 4 cable clips that hold the harness to the unit's chassis (callout 3).

To Reinstall:

1. Properly replace all 11 cable harness connectors (callouts 1 and 2).
2. Reattach the harness to the 4 cable clips that hold the harness to the unit's chassis (callout 3).

Download Service Manual And Resetter Printer at http://printer1.blogspot.com

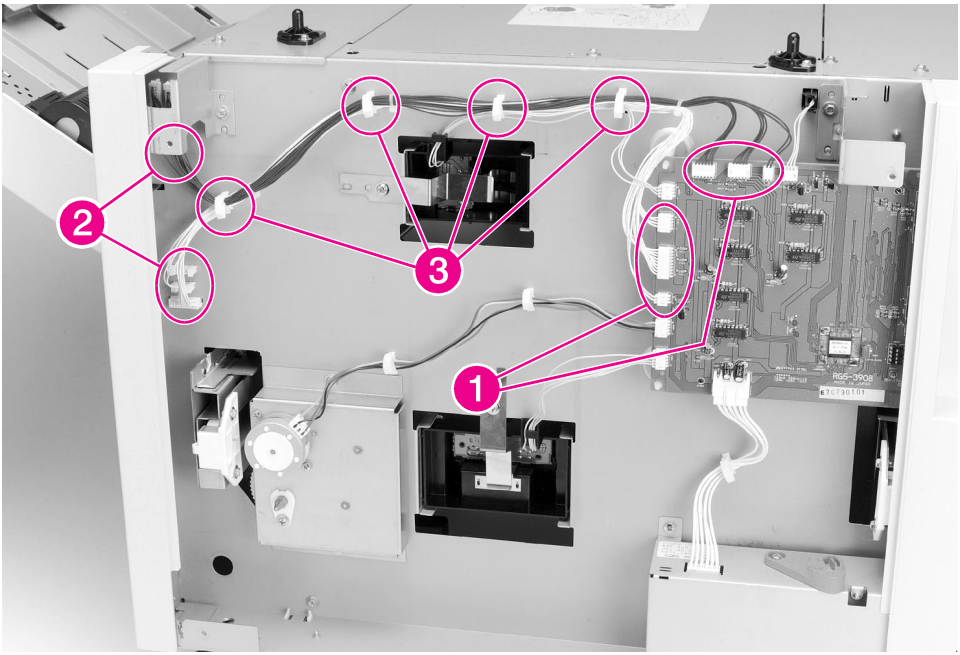

Figure 6-70 **2000-sheet Input Tray Main Cable Harness**

Download Service Manual And Resetter Printer at http://printer1.blogspot.com

Controller PCA

1 Remove the Back and Left Covers from the 2000-sheet Input Tray (see figure 6-65 and figure 6-66).

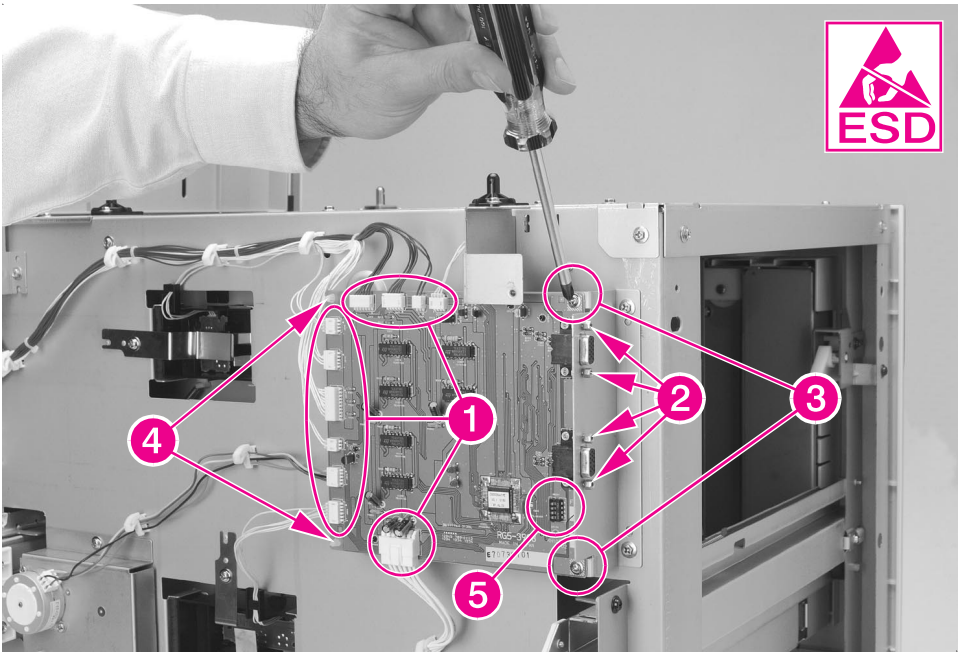

Figure 6-71 **2000-sheet Input Tray Controller PCA**

2 Disconnect the 11 cables from the Controller PCA on the 2000-sheet Input Tray (figure 6-71, callout 1).

3 Remove the 4 hex screws that secure the 2 C-link cable connectors to the metal base (callout 2).

4 Remove the 2 screws that secure the right side of the Controller PCA to the metal base (callout 3).

5 Release the 2 plastic retaining posts that secure the left side of the Controller PCA to the metal base (callout 4), and then pull the Controller PCA out from the unit's chassis.

Download Service Manual And Resetter Printer at http://printer1.blogspot.com

To Reinstall:

1. Seat the Controller PCA firmly onto the plastic retaining posts that secure the left side of the Controller PCA to the metal plate on the chassis (callout 4).
2. Properly reconnect all 11 cables to the Controller PCA (callout 1).
3. Make sure that the DIP switches on the Controller PCA are in the normal setting (off) (callout 5). (See table 7-15 on page 447.)

Download Service Manual And Resetter Printer at http://printer1.blogspot.com

Front LED PCA Assembly

1. Open the paper tray on the 2000-sheet Input Tray halfway to the stops.
2. On the upper-left corner of the front of the unit's chassis, locate and remove the 1 screw that secures the LED PCA Assembly to the chassis (figure 6-72, callout 1).
3. Reach behind the LED PCA Assembly and pull it away from the chassis.
4. To remove the LED PCA from the cable connector, release the 3 plastic retaining tabs that secure the LED PCA to the connector (figure 6-72, callout 2).
5. Pull the LED PCA from the connector.

To Reinstall:

1. Reconnect the LED PCA to the connector (callout 2).

Download Service Manual And Resetter Printer at http://printer1.blogspot.com

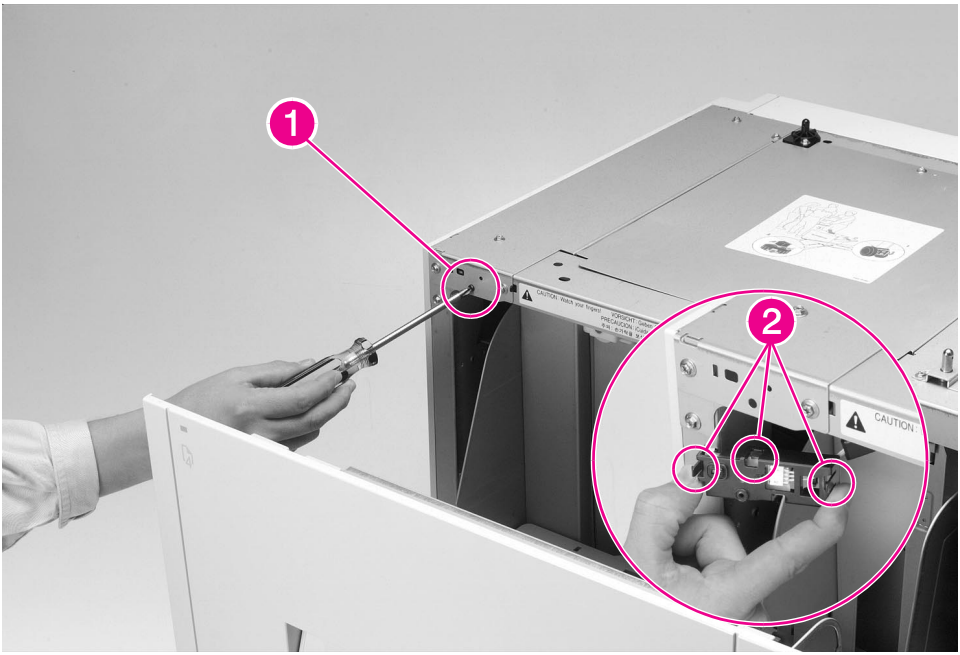

Figure 6-72 **2000-sheet Input Tray Front LED PCA**

Download Service Manual And Resetter Printer at http://printer1.blogspot.com

Pickup Assembly

1 Remove the Vertical Transfer Unit (VTU) from the 2000-sheet Input Tray (see figure 6-78).

2 Remove the Right Cover from the 2000-sheet Input Tray (see figure 6-67).

3 Open the paper tray on the 2000-sheet Input Tray to the stops.

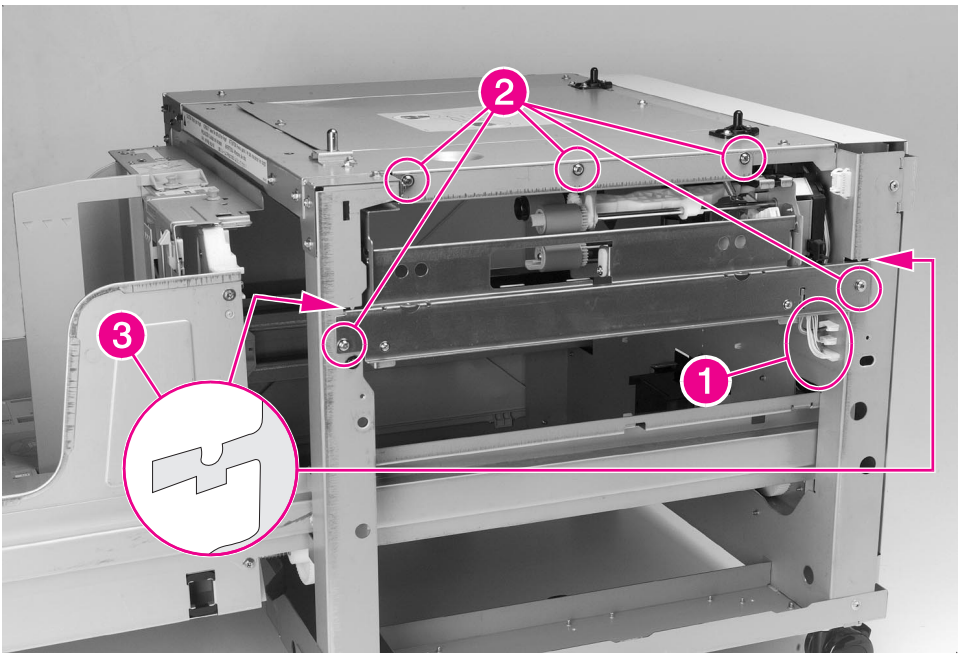

Figure 6-73 **2000-sheet Input Tray Pickup Assembly**

4 Disconnect the 3 cables that are located at the bottom-right side of the Pickup Assembly (figure 6-73, callout 1).

5 Remove the 5 screws that secure the Pickup Assembly to the unit's chassis: 3 screws along the top, and 1 screw on each side (callout 2).

6 Slide the Pickup Assembly straight out of the chassis.

Download Service Manual And Resetter Printer at http://printer1.blogspot.com

To Reinstall:

1. Make sure that the paper tray is open to easily slide the Pickup Assembly into the chassis.
2. Make sure that the Pickup Assembly is seated properly in the locating slots (callout 3).
3. Reconnect the 3 cables that are located at the bottom-right side of the Pickup Assembly (callout 1).

Download Service Manual And Resetter Printer at http://printer1.blogspot.com

Power Supply

1 Remove the Back and Left Covers from the 2000-sheet Input Tray (see figure 6-65 and figure 6-66).

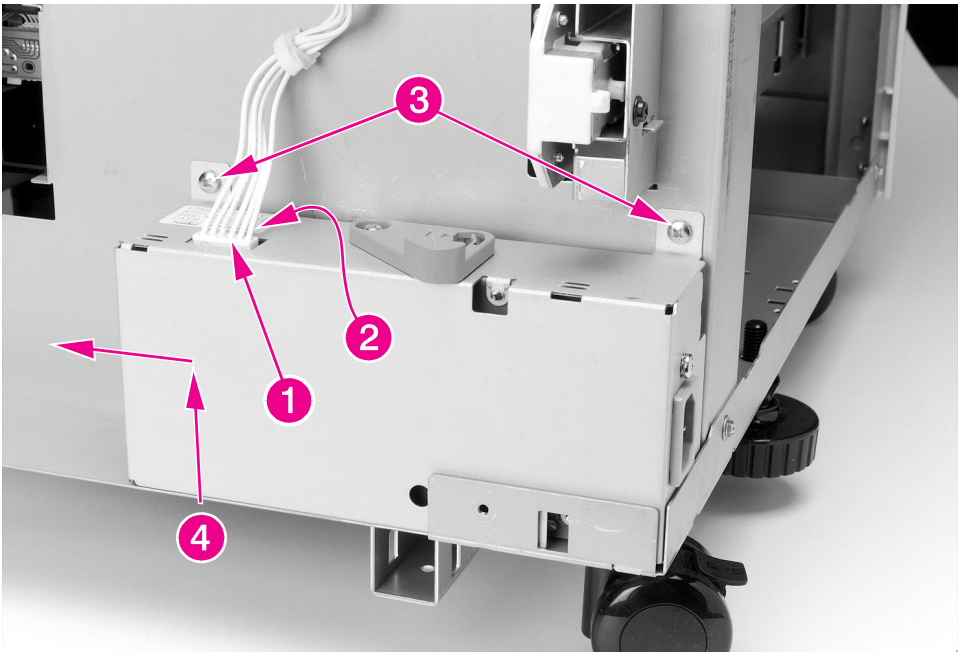

Figure 6-74 **2000-sheet Input Tray Power Supply**

2 Locate the cable that runs from the Controller PCA on the 2000-sheet Input Tray to the unit's Power Supply (Figure 6-74, callout 1). Disconnect the cable from the Power Supply by pushing on the retaining tab that is located behind the cable connector (callout 2).

3 Remove the 2 screws that secure the Power Supply to the chassis (callout 3).

4 Lift the Power Supply upward to clear the locating tabs underneath, and then slide the Power Supply to the left to free it from the chassis (callout 4).

Download Service Manual And Resetter Printer at http://printer1.blogspot.com

To Reinstall:

1. Carefully align the locating tabs so that they are positioned correctly.
2. Reconnect the cable that runs from the Power Supply to the Controller PCA on the 2000-sheet Input Tray (callout 1). The cable connector is seated properly when it clicks.

Download Service Manual And Resetter Printer at http://printer1.blogspot.com

Pickup, Feed, and Separation Rollers

Three rollers in the 2000-sheet Input Tray pick up paper and feed it to the printer:

- The Pickup Roller is the upper-forward roller (Figure 6-75, callout 1).
- The Feed Roller is the upper-rear roller (callout 2).
- The Separation Roller is the lower roller (callout 3).

Note

The Feed and Separation Rollers in the 2000-sheet Input Tray are interchangeable with each other and with the Feed and Separation Rollers in trays 2 and 3 on the printer. Additionally, the Pickup Roller in the 2000-sheet Input Tray is interchangeable with the Pickup Rollers in trays 2 and 3 on the printer.

The Feed and Separation Rollers have protruding retaining tabs that secure the rollers to their respective shafts. The retaining tab on the Pickup Roller is recessed.

The Feed and Separation Rollers must be replaced every 350,000 images. The two rollers are included in the following HP LaserJet 8100, 8100 N, and 8100 DN maintenance kit: C3914A (110V), C3915A (220V). The kit contains all the necessary parts for the required user maintenance procedure.

Download Service Manual And Resetter Printer at http://printer1.blogspot.com

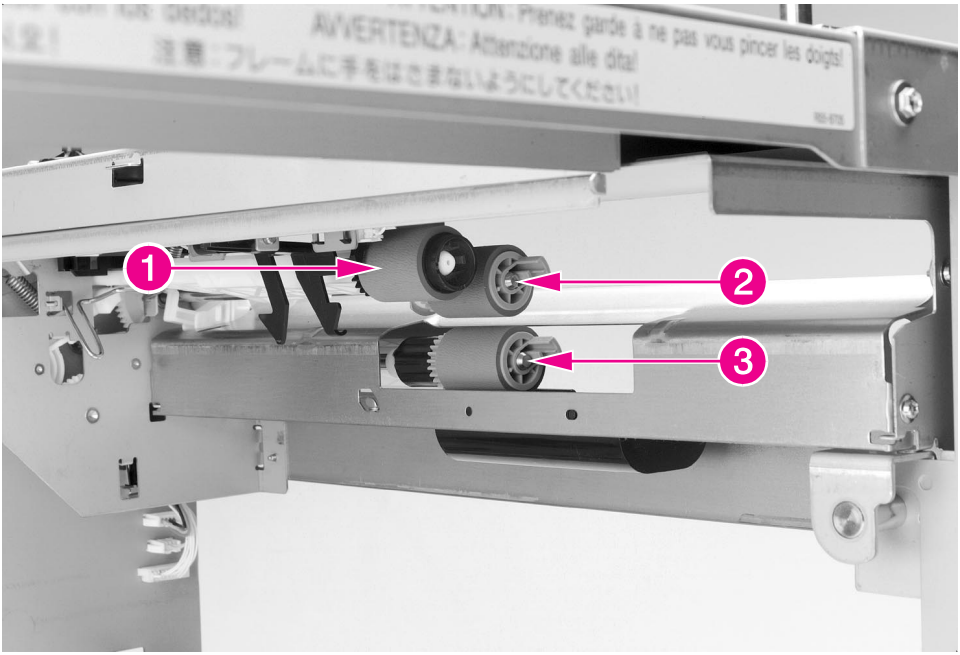

Figure 6-75 **2000-sheet Input Tray Rollers: Pickup, Feed, and Separation**

To Remove the Feed and Separation Rollers

1. Open the Vertical Transfer Unit (VTU) on the 2000-sheet Input Tray.
2. Locate the rollers inside the tray cavity. To remove a roller, pinch the retainer tabs together and slide the roller off the shaft. Remove the Feed Roller (upper-rear roller) first. Then remove the Separation Roller (lower roller).

To Remove the Pickup Roller

1. Open the paper tray on the 2000-sheet Input Tray to the stops.
2. Remove the Left Cover from the 2000-sheet Input Tray (see figure 6-66 on page 239).
3. Locate the Pickup Roller inside the tray cavity.
4. Pinch the recessed retainer tab on the roller, and slide the roller off the shaft.

Note Reassembly notes are on the next page.

Download Service Manual And Resetter Printer at http://printer1.blogspot.com

To Reinstall:

1. If all three rollers were removed, reinstall the Pickup Roller first (callout 1).
2. When reinstalling the Feed and Separation Rollers, install the Separation Roller (lower roller) first (callout 3). Then install the Feed Roller (upper-rear roller) (callout 2).
3. When installing a roller, listen for a click. It signals that the roller is secured onto the shaft.

Download Service Manual And Resetter Printer at http://printer1.blogspot.com

Paper Quantity Switch Assembly

1. Remove the Back Cover from the 2000-sheet Input Tray (see figure 6-65 on page 238).
2. Locate the cable that runs from the Paper Quantity Switch Assembly on the 2000-sheet Input Tray to the unit's Controller PCA. Disconnect the cable from the Controller PCA (J205 connector), and then free the cable from the cable clips that secure it to the chassis (Figure 6-76, callout 1).
3. Remove the 1 screw (callout 2) and the metal retaining spring (callout 3) that hold the switch assembly in place.
4. Pull the switch assembly out of its cavity (Figure 6-77, callout 1).

To Reinstall:

1. When reinstalling the metal retaining spring that holds the switch assembly in place (Figure 6-76, callout 2), seat the retaining spring onto the locating pins that are on the chassis.
2. Reconnect the switch assembly's cable to the J205 connector on the Controller PCA (Figure 6-76, callout 1).

Paper Size Switch Assembly

1. Remove the Back Cover from the 2000-sheet Input Tray (see Figure 6-65).
2. Locate the cable that runs from the Paper Size Switch Assembly on the 2000-sheet Input Tray to the unit's Controller PCA. Disconnect the cable from the Controller PCA (J204 connector) (Figure 6-76, callout 4).
3. Remove the 1 screw (callout 5) and the metal retaining spring (callout 6) that hold the switch assembly in place.
4. Pull the switch assembly out of its cavity (Figure 6-77, callout 2).

To Reinstall:

1. When reinstalling the metal retaining spring that holds the switch assembly in place (Figure 6-76, callout 5), seat the retaining spring onto the locating pins on the chassis.
2. Reconnect the switch assembly's cable to the J204 connector on the Controller PCA (Figure 6-76, callout 4).

Download Service Manual And Resetter Printer at http://printer1.blogspot.com

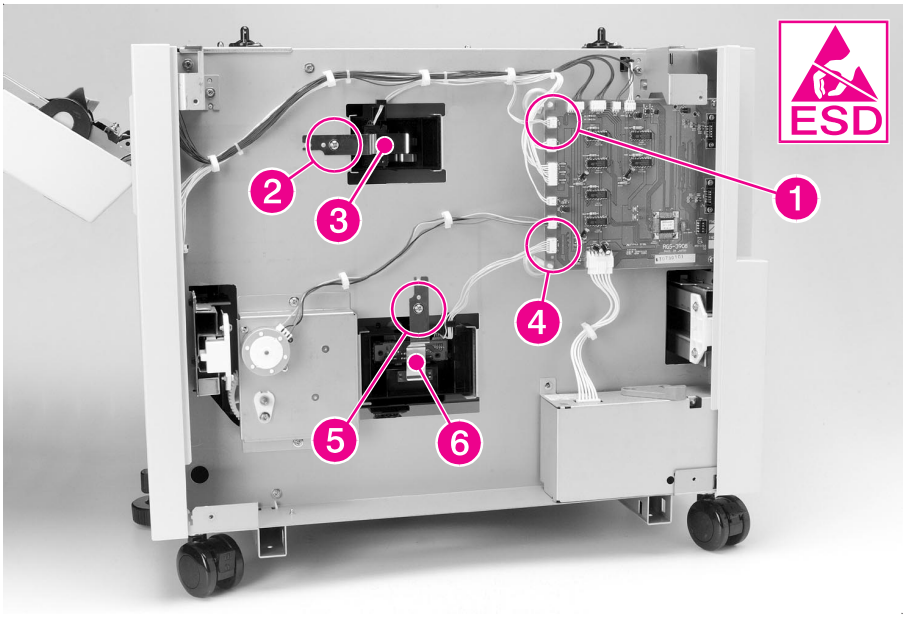

Figure 6-76 **2000-sheet Input Tray Paper Size and Paper Quantity Switch**

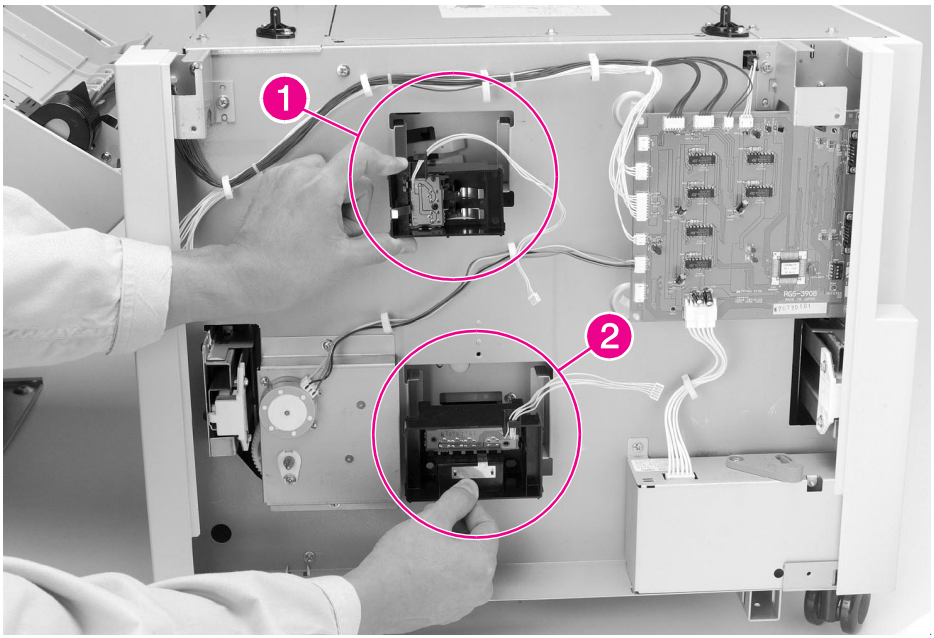

Figure 6-77 **2000-sheet Input Tray Paper Size and Paper Quantity Switch Assemblies (2 of 2)**

Download Service Manual And Resetter Printer at http://printer1.blogspot.com

Vertical Transfer Unit (VTU)

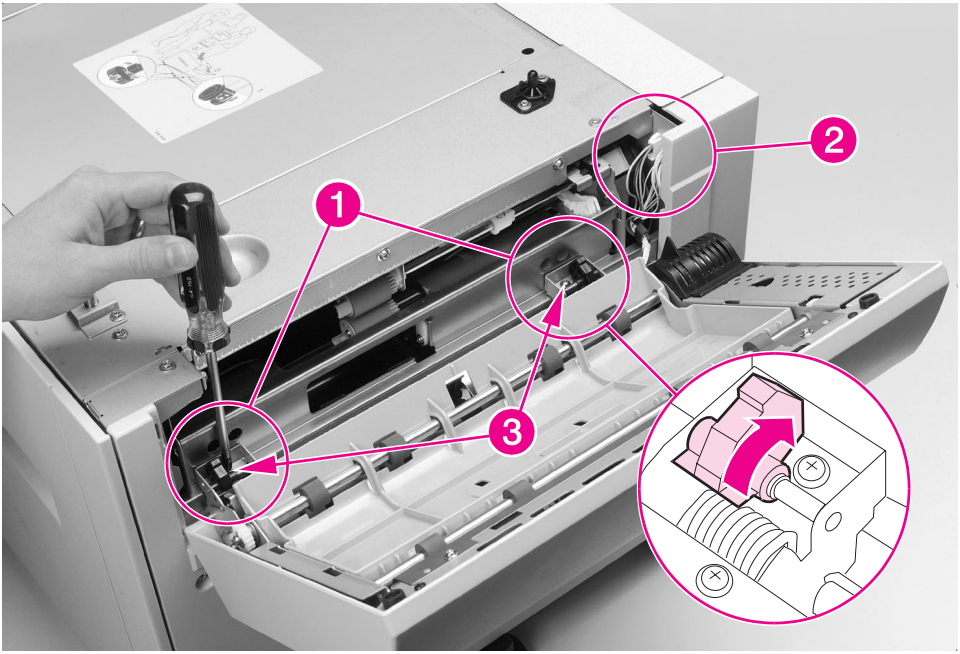

Figure 6-78 **2000-sheet Input Tray Vertical Transfer Unit (VTU)**

1. Open the Vertical Transfer Unit (VTU) on the 2000-sheet Input Tray.
2. Rotate the 2 plastic cams on the VTU hinges toward the 2000-sheet Input Tray to the secure position (Figure 6-78, callout 1).

WARNING! Do **not** release the plastic cams from the secure position while the VTU is off. The springs on the cams are very strong and may cause injury.

3. Locate the 2 cables that run from the VTU to the chassis at the right side's upper-back corner (Figure 6-78, callout 2) and disconnect the 2 cables from the chassis.
4. Remove the 2 screws that secure the VTU to the chassis: 1 screw near each end of the VTU (Figure 6-78, callout 3).
5. Lift the VTU straight up to clear the metal locating tabs on the chassis.

Note Reassembly notes are on the next page.

Download Service Manual And Resetter Printer at http://printer1.blogspot.com

To Reinstall:

WARNING! Release the plastic cams only **after** tightening the screws that secure the VTU to the chassis.

1. Before tightening the screws, make sure that the metal locating tabs are in place.
2. Reconnect the cables that run from the VTU to the chassis at the right side's upper-back corner (callout 2).

Download Service Manual And Resetter Printer at http://printer1.blogspot.com

Tension Springs

1 Remove the Left Cover of the 2000-sheet Input Tray (see figure 6-66 on page 239).

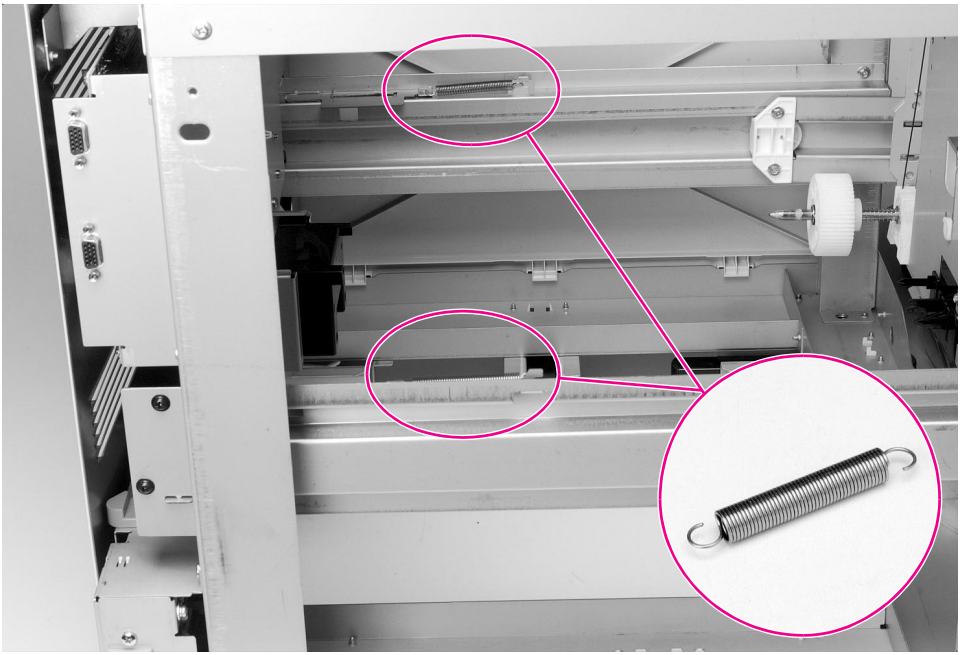

Figure 6-79 **2000-sheet Input Tray Tension Springs**

2 Open the paper tray on the 2000-sheet Input Tray all the way to the stops.

3 Inside the tray cavity, locate and remove the 2 springs on the tray runners: 1 spring on left runner (left side of the chassis) and 1 spring on the right runner (right side of the chassis) as shown in Figure 6-79.

Download Service Manual And Resetter Printer at http://printer1.blogspot.com

Locating Pins

1 Remove the printer from the 2000-sheet Input Tray.

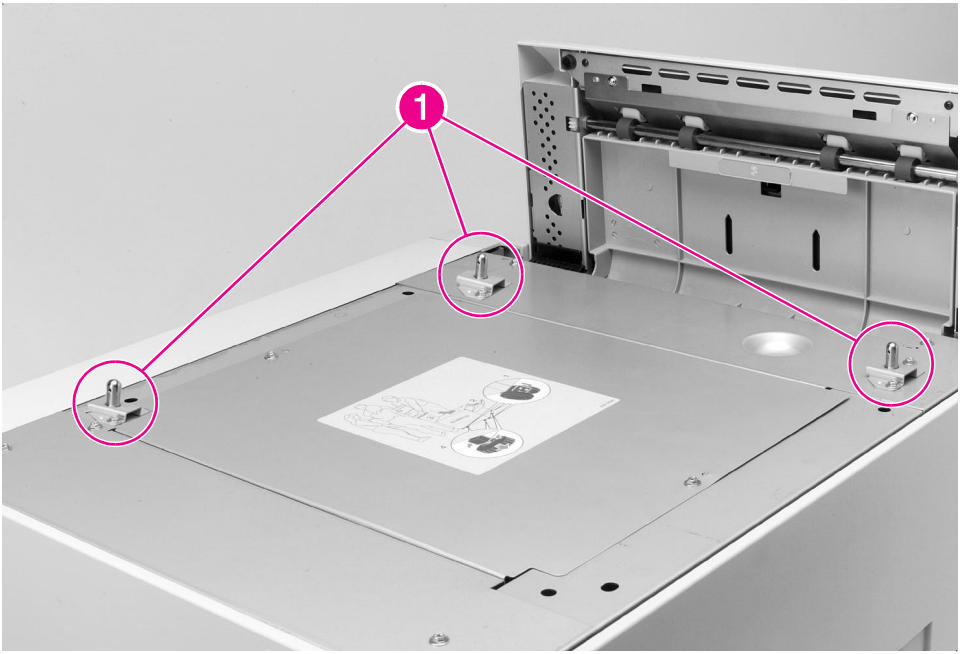

Figure 6-80 **2000-sheet Input Tray Locating Pins**

2 Locate the 3 Locating Pins on the top of the 2000-sheet Input Tray (Figure 6-80, callout 1), and remove the 2 screws on each Locating Pin.

3 To remove the Locating Pins lift them straight up.

Download Service Manual And Resetter Printer at http://printer1.blogspot.com

Casters and Stabilizing Feet

1 Remove the printer from the 2000-sheet Input Tray.

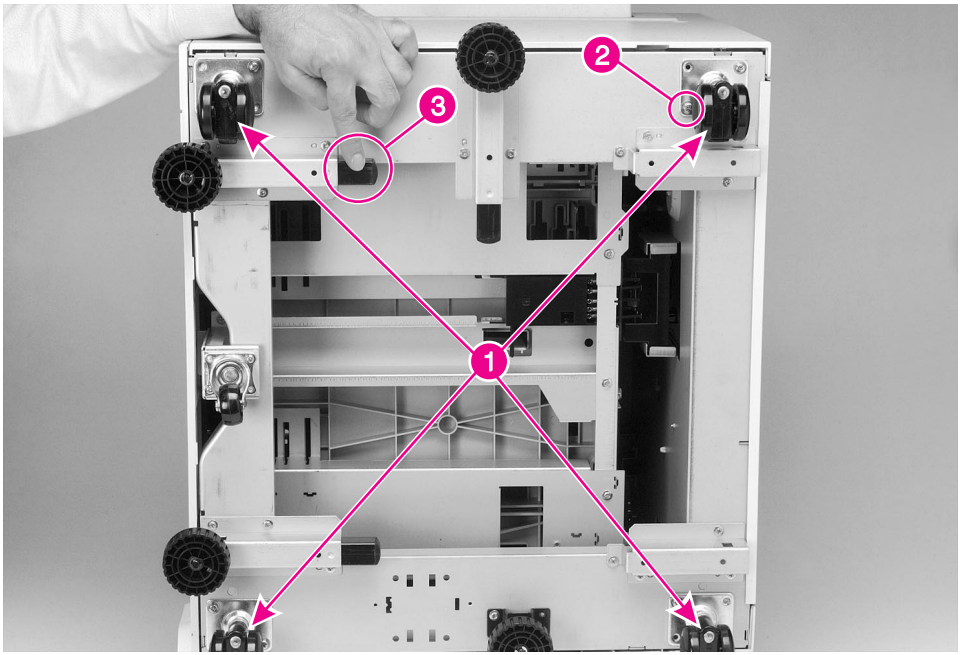

Figure 6-81 **2000-sheet Input Tray Casters**

2 Tip the 2000-sheet Input Tray onto its left side.

3 Locate the 4 Casters, 1 on each corner of the chassis (Figure 6-81, callout 1).

4 Remove a Caster by removing the 2 screws that hold the Caster to the chassis (callout 2).

Note To remove the stabilizing feet press as shown in callout 3, and release the stabilizing feet.

To Reinstall:

1 Tighten the screws securely when reinstalling each caster (callout 2).

Download Service Manual And Resetter Printer at http://printer1.blogspot.com

Adjustable Foot

1 Remove the printer from the 2000-sheet Input Tray.

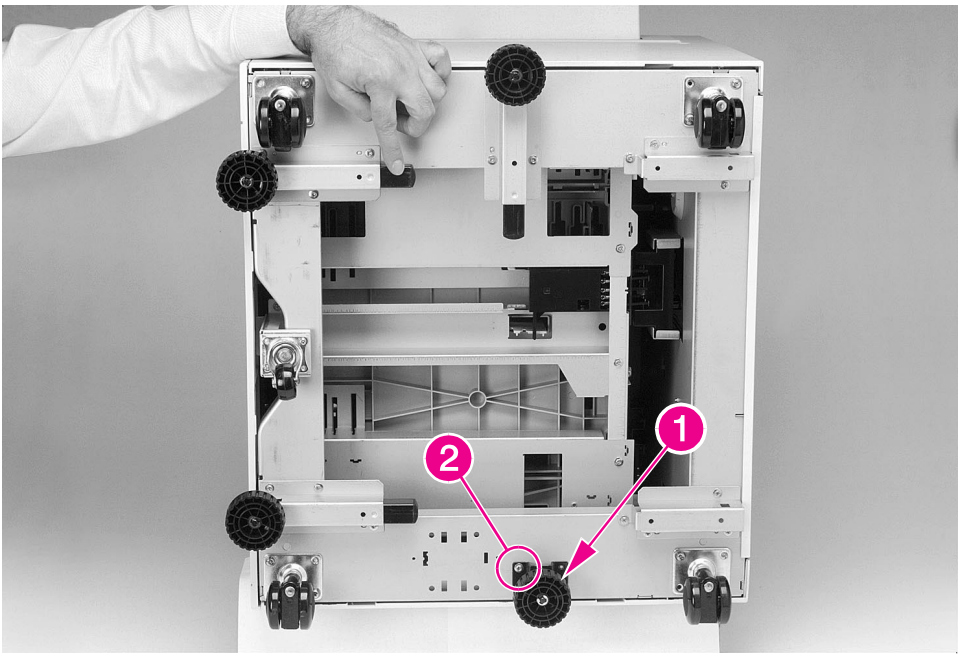

Figure 6-82 **2000-sheet Input Tray Adjustable Foot**

2 Tip the 2000-sheet Input Tray onto its left side.

3 Locate the Adjustable Foot (Figure 6-82, callout 1), and remove the 2 screws that secure the Adjustable Foot to the chassis (callout 2).

Download Service Manual And Resetter Printer at http://printer1.blogspot.com

2 x 500-sheet Input Tray Removal and Replacement

Note Reinstallation is generally the reverse of the removal process. Carefully follow any additional instructions provided under “To Reinstall.”

Orientation of the 2 x 500-sheet Input Tray - - - - - - - - 266
Back Cover - 267
Left Cover - 268
Vertical Transfer Unit (VTU) - - - - - - - - - - - - - - - - 269
Right Cover - 272
Front Top Cover - 275
Trays 4 and 5 - 278
Pickup Assembly - 280
Paper Deck Drive Assembly - - - - - - - - - - - - - - - - - 282
Pickup, Feed, and Separation Rollers - - - - - - - - - - - 284
Controller PCA - 285
Tray-Size Sensing PCA - - - - - - - - - - - - - - - - - - - 286
Power Supply - 288
Main Cable - 289
Storage Paper Tray - 291
Front Door (Storage Area) - - - - - - - - - - - - - - - - - 292
Casters - 293
Foot Tip and Adjustable Foot Tip (Stabilizing Feet) - - - - 294
Locating Pins - 295
Front LED PCA - 296

Download Service Manual And Resetter Printer at http://printer1.blogspot.com

Orientation of the 2 x 500-sheet Input Tray

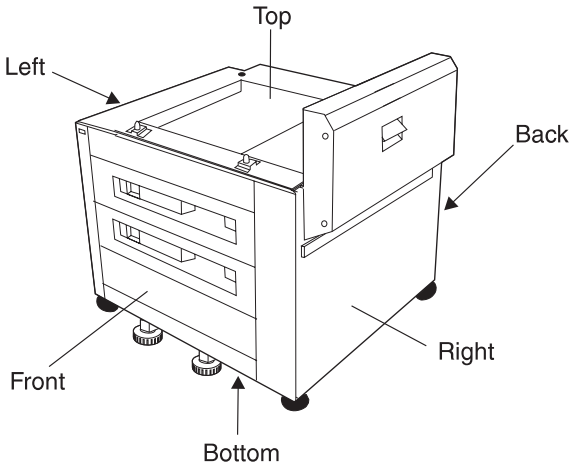

Figure 6-83 **Orientation of the 2 x 500-sheet Input Tray**

To remove the 2 x 500-sheet Input Tray from the printer, see page 157.

Download Service Manual And Resetter Printer at http://printer1.blogspot.com

Back Cover

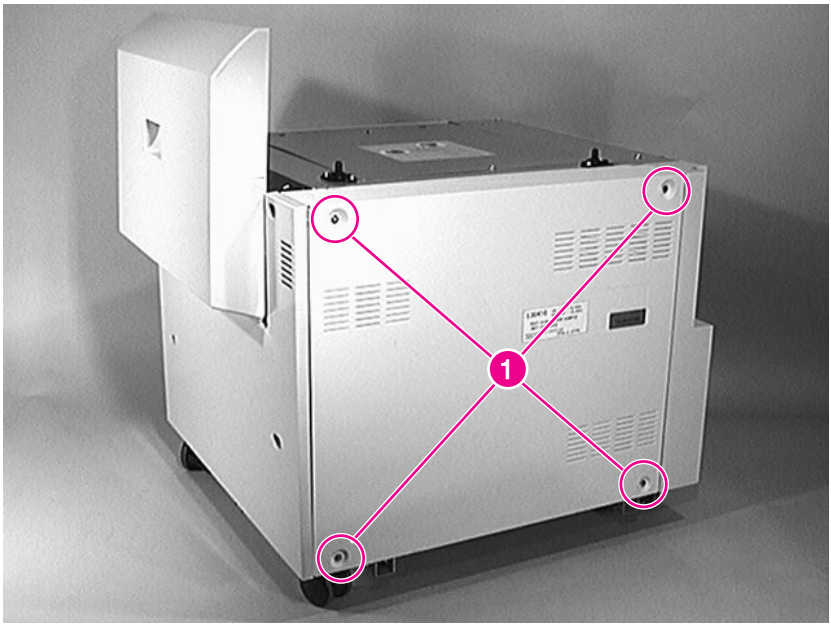

Figure 6-84 **Back Cover**

1 Remove 4 screws (callout 1).

2 Release and pull out the Back Cover.

Note The reassembly procedure is the reverse of the disassembly procedure.

Download Service Manual And Resetter Printer at http://printer1.blogspot.com

Left Cover

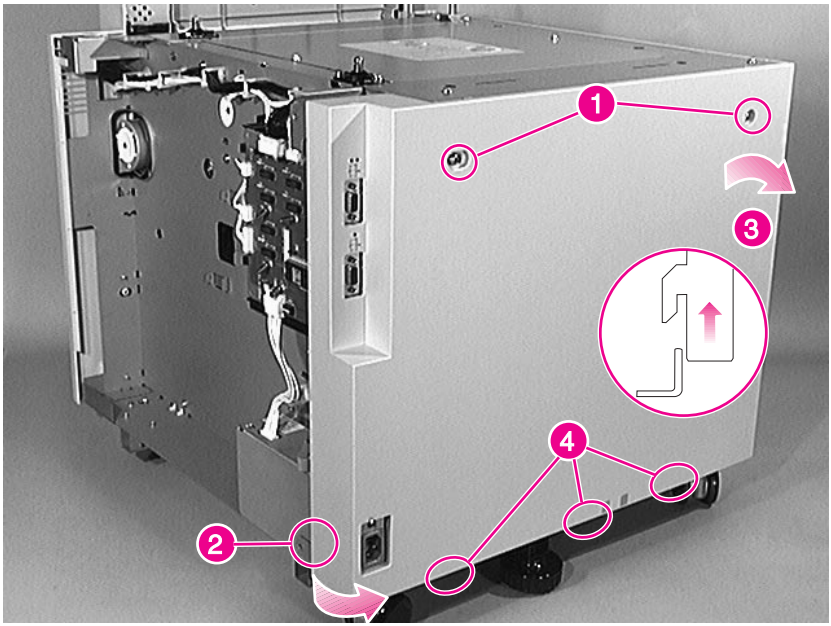

Figure 6-85 **Left Cover**

1. Unplug the power cord and C-link interface cables, and remove the Back Cover (page 267).
2. Remove 2 screws (callout 1).
3. Release the tab next to the power supply (callout 2).
4. Tip the cover outward to release the screw holders (callout 3).
5. Lift the cover up to clear the bottom tabs (callout 4).

Note Align the screw holes with their holders when you replace the cover.

Download Service Manual And Resetter Printer at http://printer1.blogspot.com

Vertical Transfer Unit (VTU)

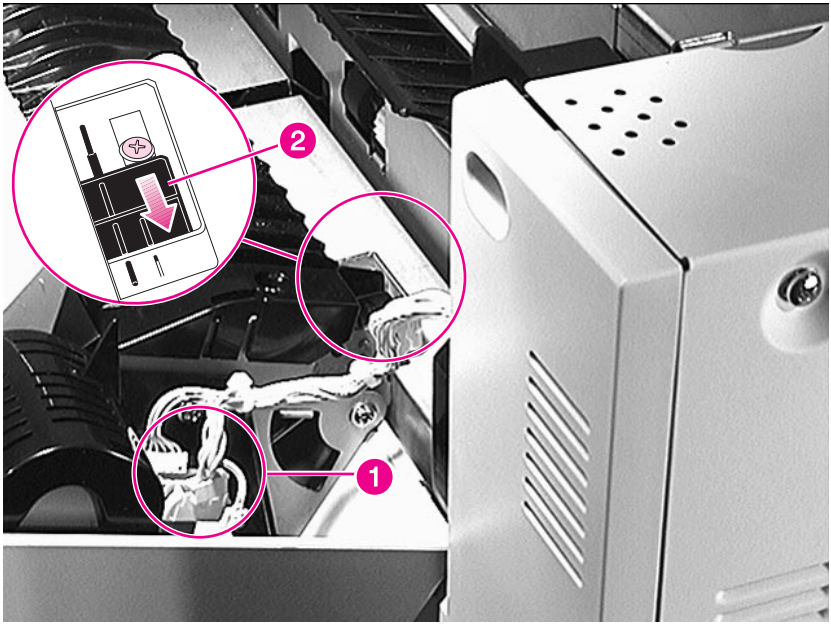

Figure 6-86 **Vertical Transfer Unit (VTU) (1 of 3)**

1. Open the Vertical Transfer Unit (VTU) on the 2 x 500-sheet Input Tray.
2. Unplug the 3 cables that connect the VTU to the chassis (callout 1).

WARNING! Do **not** release the plastic cams from the secure position while the VTU is off. The springs on the cams are very strong and may cause injury.

3. Slide the 2 plastic cams on the VTU hinges to the secure position (callout 2).

Download Service Manual And Resetter Printer at http://printer1.blogspot.com

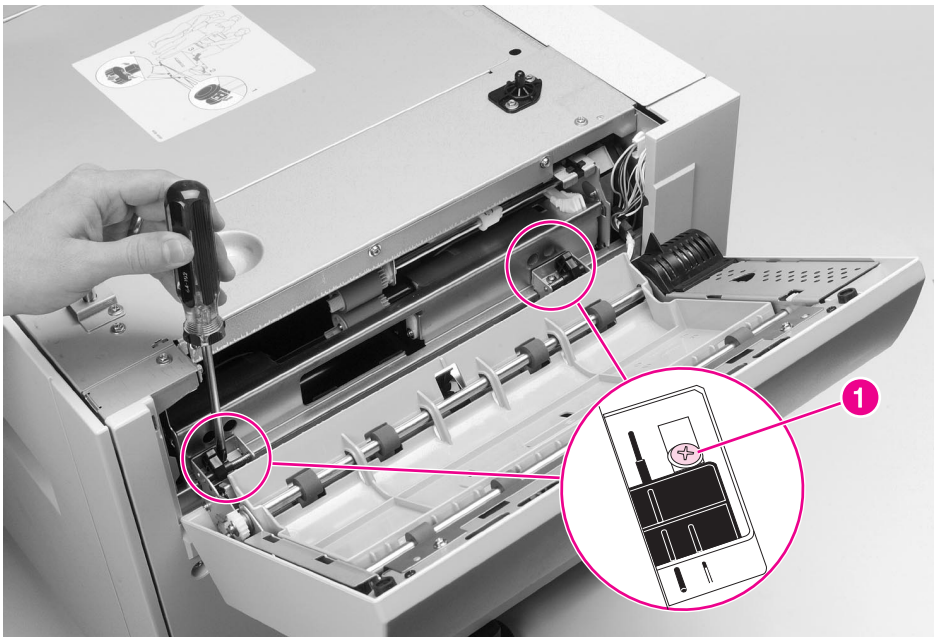

Figure 6-87 **Vertical Transfer Unit (VTU) (2 of 3)**

4 Remove the 2 screws that secure the VTU to the chassis: 1 screw near each end of the VTU (callout 1).

5 Lift the VTU straight up to clear the metal tabs on the chassis.

Download Service Manual And Resetter Printer at http://printer1.blogspot.com

To reinstall:

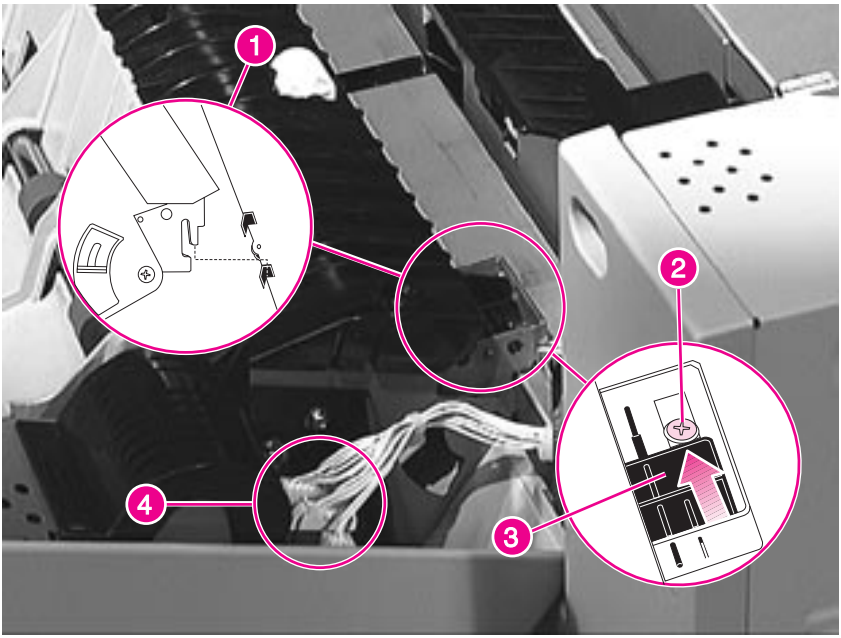

Figure 6-88 **Vertical Transfer Unit (VTU) (3 of 3)**

WARNING! To avoid injury, tighten the screws that secure the VTU to the chassis **before** you release the plastic cams.

1 Insert the metal tabs into the slots of the chassis (callout 1).

2 Tighten the screws (callout 2).

3 Release the cams (callout 3).

4 Plug in the 3 cables that connect the VTU to the chassis (callout 4).

Download Service Manual And Resetter Printer at http://printer1.blogspot.com

Right Cover

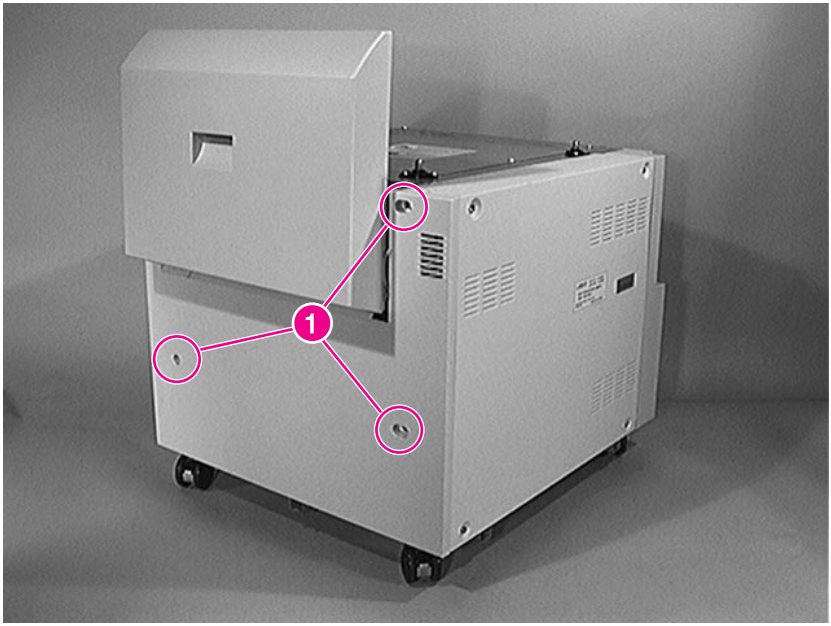

Figure 6-89 **Right Cover (1 of 3)**

1. Remove the Back Cover (page 267) and the Vertical Transfer Unit (VTU) (page 269).
2. Remove 3 screws (callout 1).

Download Service Manual And Resetter Printer at http://printer1.blogspot.com

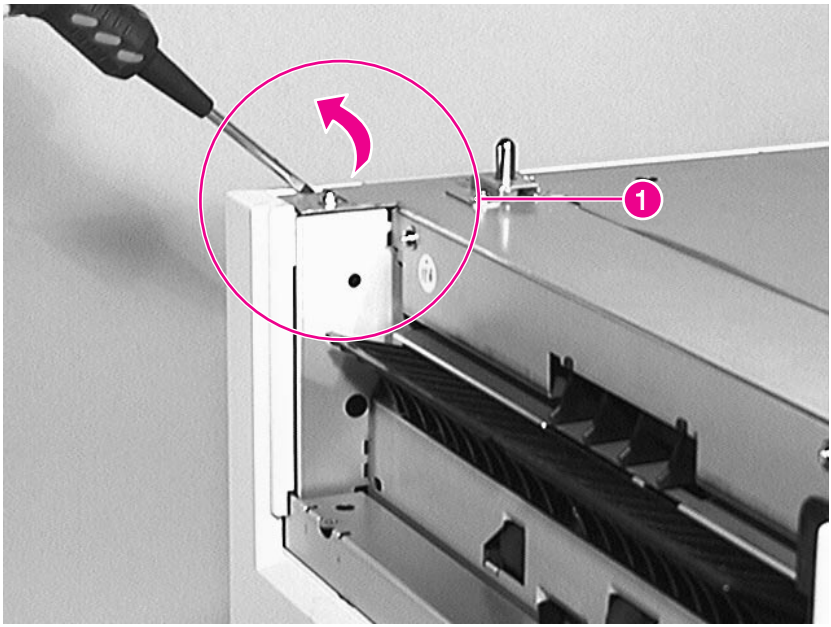

Figure 6-90 **Right Cover (2 of 3)**

3 Release the left side of the Right Cover from the tabs, and remove it (callout 1).

Download Service Manual And Resetter Printer at http://printer1.blogspot.com

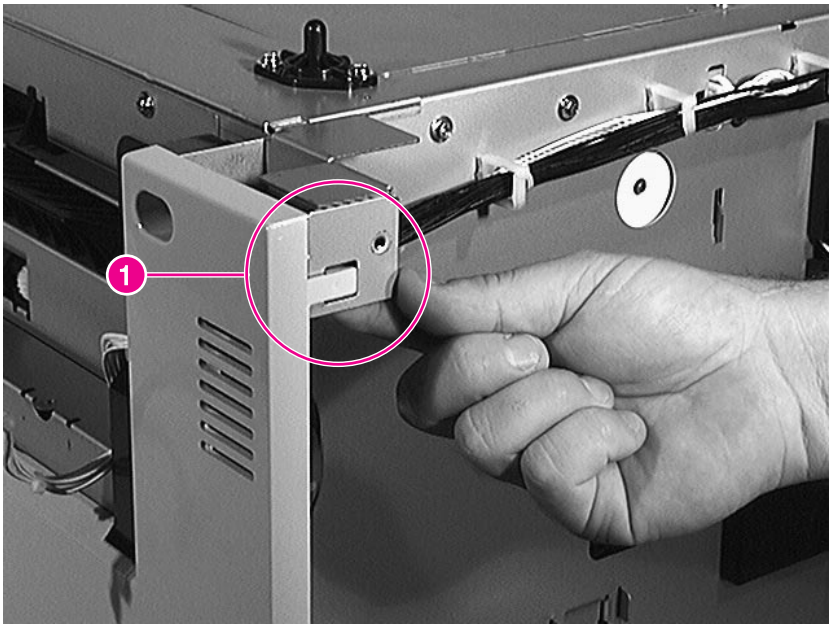

Figure 6-91 **Right Cover (3 of 3)**

4 Release the tab from the right side of the Right Cover as shown in figure 6-91 (callout 1).

5 Lift the Right Cover up to clear the tabs at the bottom.

Download Service Manual And Resetter Printer at http://printer1.blogspot.com

Front Top Cover

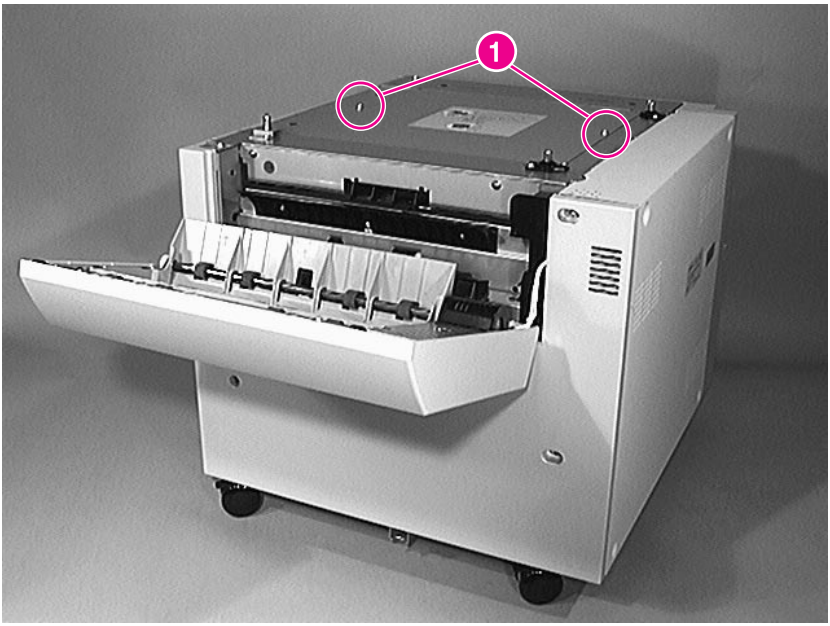

Figure 6-92 **Front Top Cover (1 of 3)**

1. Remove the printer from the 2 x 500-sheet Input Tray.
2. Remove 2 screws (callout 1).
3. Remove Top Cover. The Top Cover has a label.

Download Service Manual And Resetter Printer at http://printer1.blogspot.com

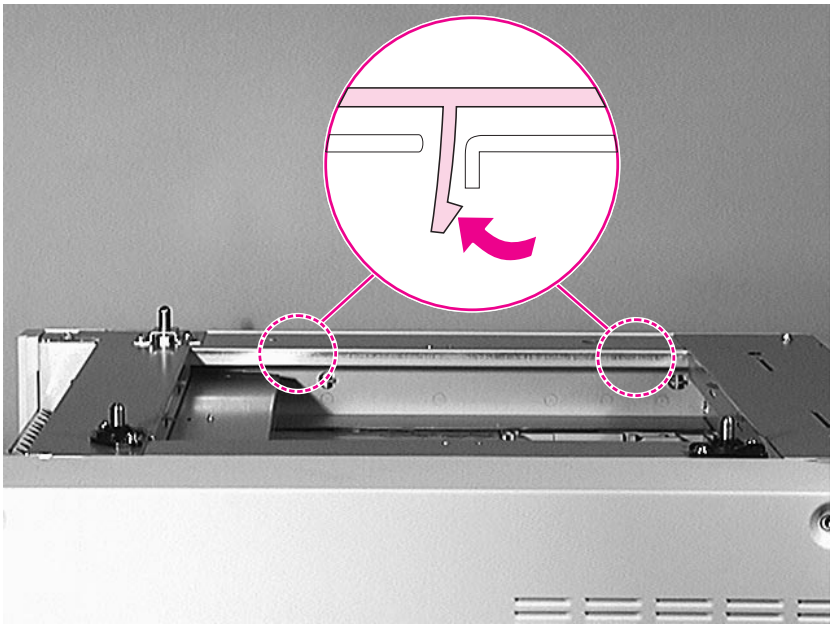

Figure 6-93 **Front Top Cover (2 of 3)**

4 From inside of the unit release the central tabs, as shown in figure 6-93.

Download Service Manual And Resetter Printer at http://printer1.blogspot.com

Figure 6-94 **Front Top Cover (3 of 3)**

5 Push the front top cover to the left to release the remaining tabs.

Note Align the pins when you replace the Top Front Cover.

Download Service Manual And Resetter Printer at http://printer1.blogspot.com

Trays 4 and 5

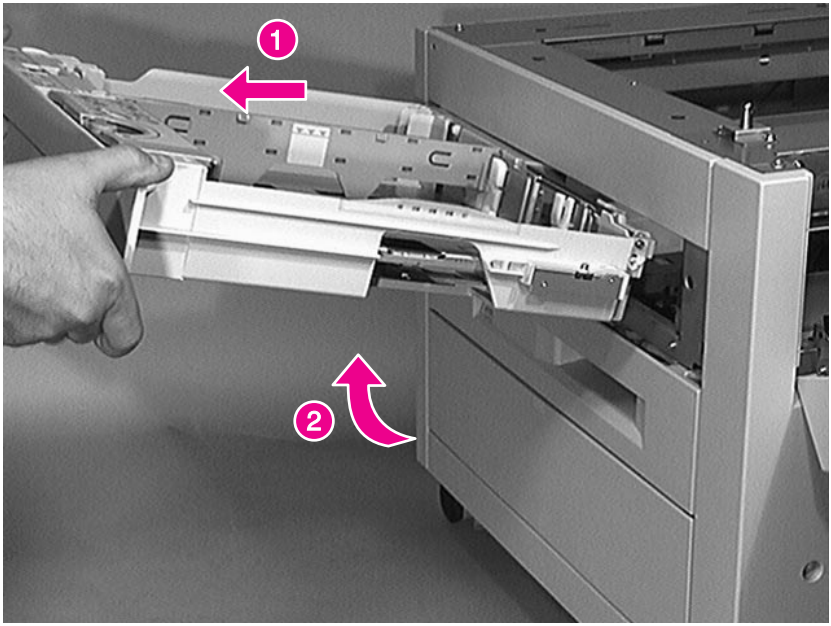

Figure 6-95 **Trays 4 and 5 (1 of 2)**

1 Open the tray and pull it out to the stop (callout 1).

2 As you pull out the tray, tip up the end as shown in callout 2 to release the stop mechanism at the right rear of the tray.

Download Service Manual And Resetter Printer at http://printer1.blogspot.com

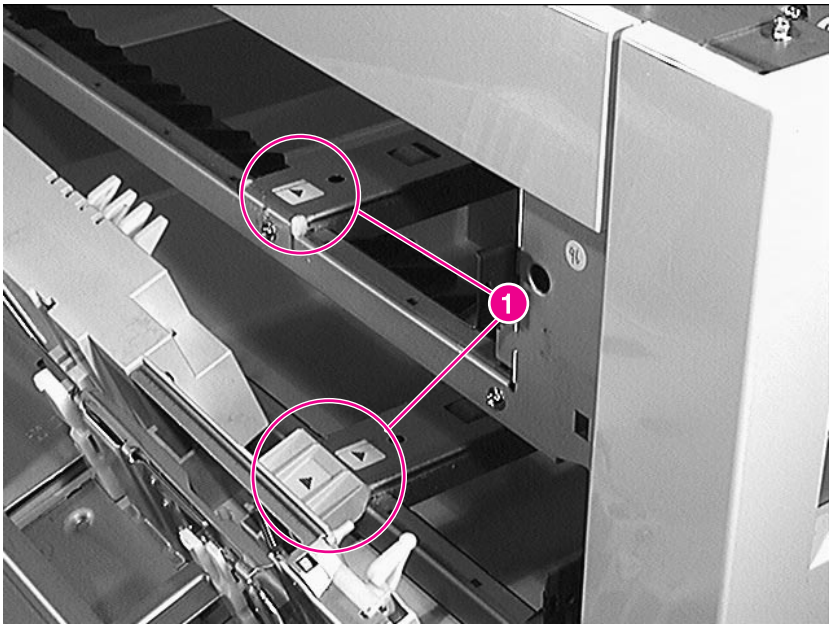

Figure 6-96 **Trays 4 and 5 (2 of 2)**

To Reinstall:

1. Tip the end of the tray downward. Align the guides with the left rear corner of the tray and the arrow at the lower rear center of the tray (callout 1).
2. Insert the tray no more than 2 inches (5 centimeters) into the chassis.
3. Tip the end of the tray up to engage the tray stop mechanism (located at the right rear of the tray opening).
4. Slide the tray until it latches into place.

Download Service Manual And Resetter Printer at http://printer1.blogspot.com

Pickup Assembly

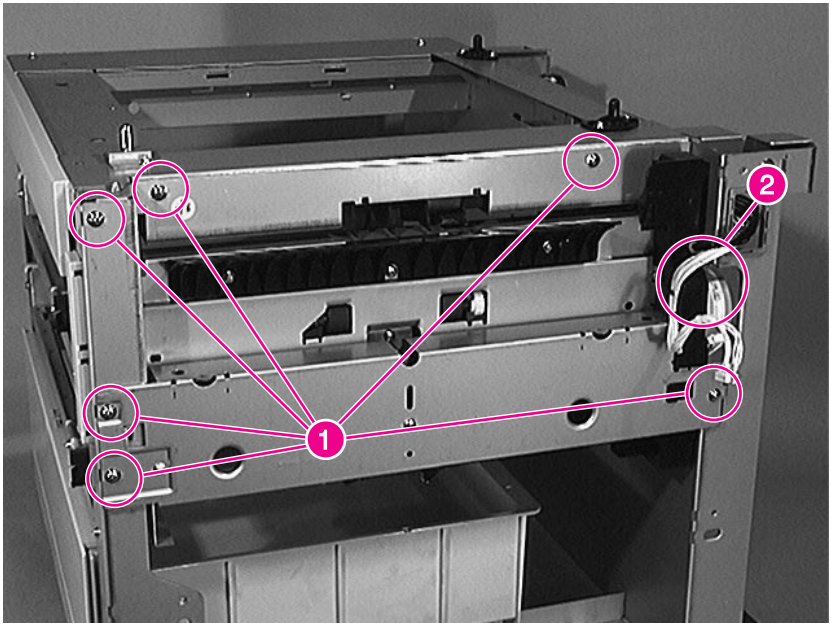

Figure 6-97 **Pickup Assembly (1 of 2)**

1. Remove trays 4 and 5 (page 278), the Right Cover (page 272), and the Vertical Transfer Unit (VTU) page 269.
2. Remove 6 screws (callout 1).
3. Remove the cable from the bracket (callout 2).

Download Service Manual And Resetter Printer at http://printer1.blogspot.com

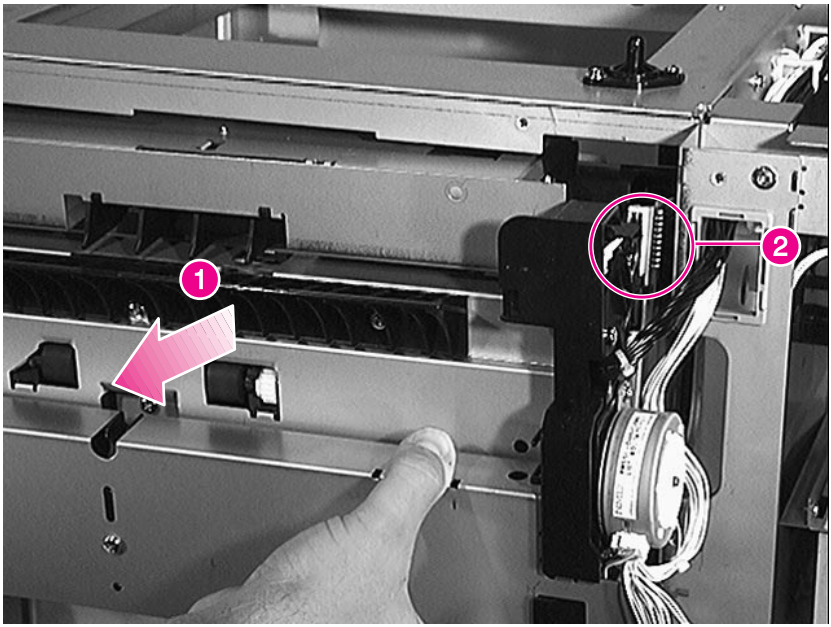

Figure 6-98 **Pickup Assembly (2 of 2)**

4 Carefully slide the Pickup Assembly straight out, supporting it until you can reach the connector (callout 1).

5 Unplug the connector (callout 2).

Download Service Manual And Resetter Printer at http://printer1.blogspot.com

Paper Deck Drive Assembly

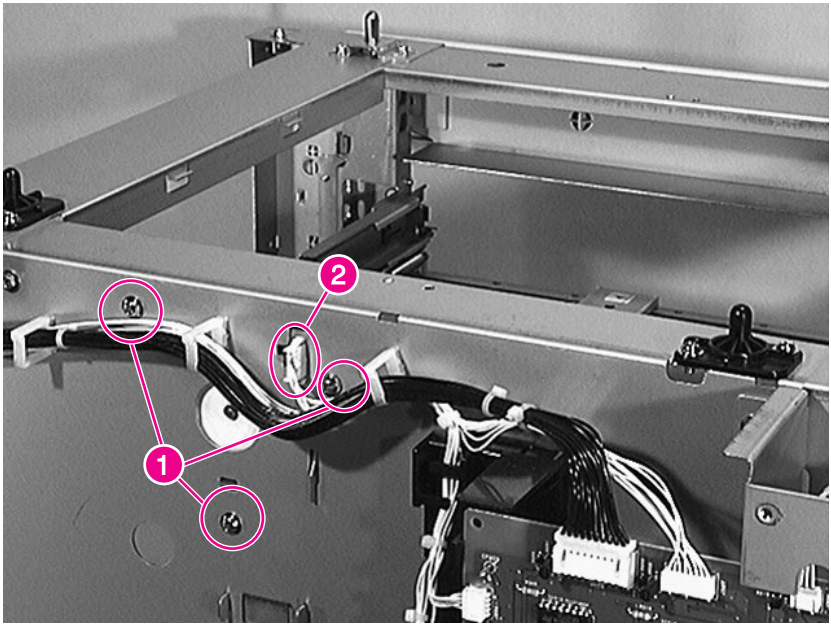

Figure 6-99 **Paper Deck Drive Assembly (1 of 2)**

1. Remove the Back Cover (page 267), Trays 4 and 5 (page 278), and the Pickup Assembly (page 280).
2. Remove 3 screws (callout 1).
3. Unplug the connector (callout 2).

Download Service Manual And Resetter Printer at http://printer1.blogspot.com

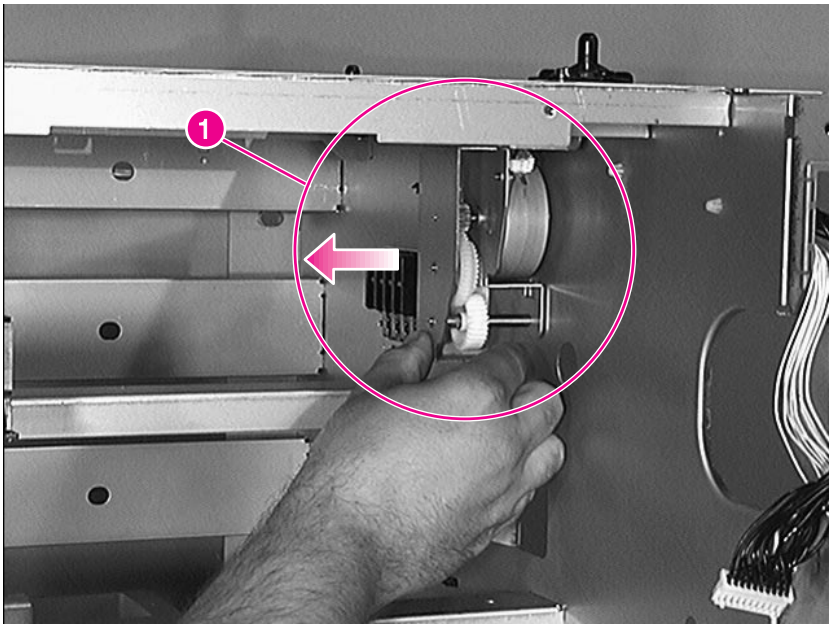

Figure 6-100 **Paper Deck Drive Assembly (2 of 2)**

4 Reach into the right side of the input device. Pull the paper deck drive assembly to the left, and then pull it straight out (callout 1).

Download Service Manual And Resetter Printer at http://printer1.blogspot.com

Pickup, Feed, and Separation Rollers

There are three rollers in this assembly. The upper forward roller is the Pickup Roller, the upper rear roller is the Feed Roller, and the lower roller is the Separation Roller. The Feed and Separation Rollers are interchangeable with each other and between the trays. The Pickup Roller is interchangeable with the Pickup Rollers in Trays 2 and 3.

- Pickup Roller: figure 6-101, callout 1
- Feed Roller: figure 6-101, callout 2
- Separation Roller: figure 6-101, callout 3

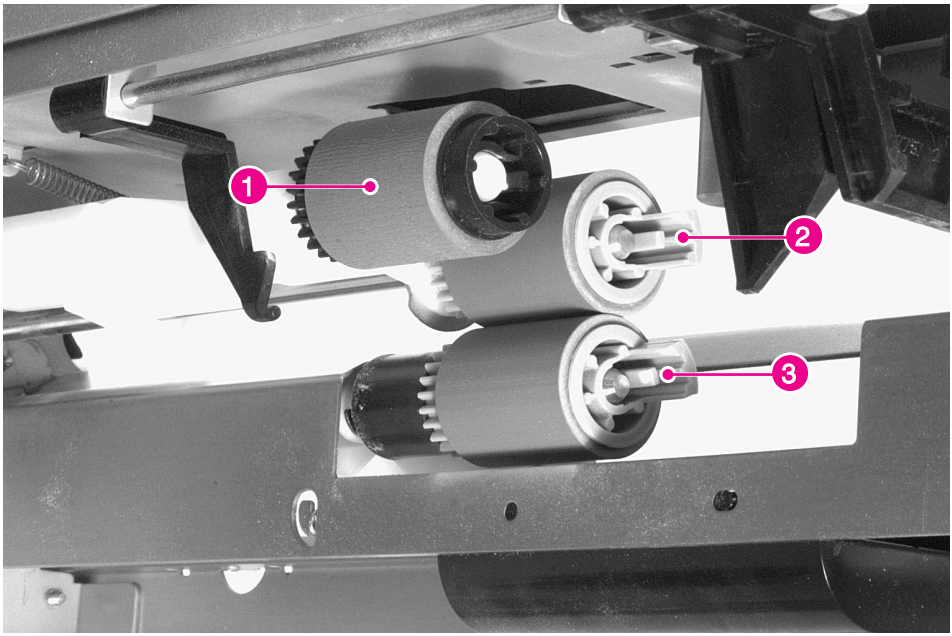

Figure 6-101 **Pickup, Feed, and Separation Rollers**

1 Remove the paper tray.

Note The Feed and Separation Rollers have protruding retaining tabs, and the Pickup Roller has recessed retaining tabs.

2 From inside the tray cavity, remove the rollers by pinching the retainer tabs together and sliding the roller off the shaft.

Download Service Manual And Resetter Printer at http://printer1.blogspot.com

Controller PCA

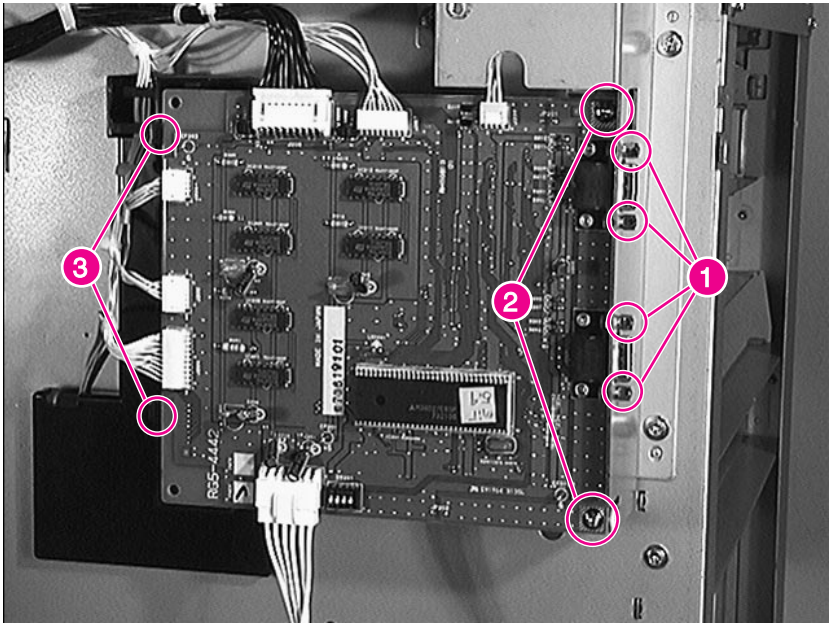

Figure 6-102 **2 x 500-sheet Input Tray Controller PCA**

1. Remove the Back Cover (page 267) and the Left Cover (page 268).
2. Unplug all 7 connectors.
3. Remove 4 hex screws from the C-link connectors (callout 1).
4. Remove the 2 screws that hold the PCA to the metal base (callout 2).
5. Release the tabs at the left side (callout 3), and remove the PCA.

Download Service Manual And Resetter Printer at http://printer1.blogspot.com

Tray-Size Sensing PCA

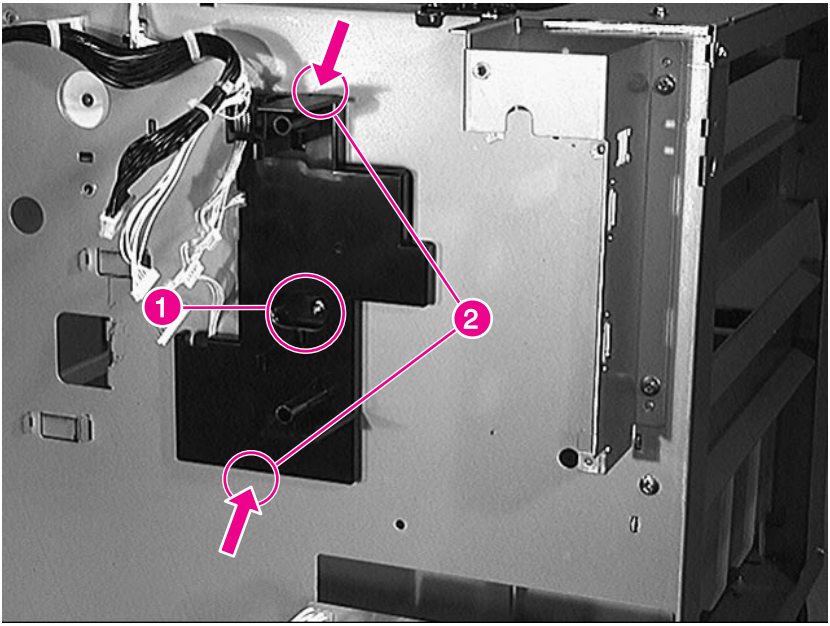

Figure 6-103 **Tray-Size Sensing PCA (1 of 2)**

1. Remove the Back Cover (page 267) and the Controller PCA (page 285).
2. Remove 1 screw (callout 1) from the size-sensing PCA's holder.
3. To remove the size-sensing PCA's holder, use a flat blade screwdriver to release the top and bottom tabs (callout 2) from the slots in the metal.

Download Service Manual And Resetter Printer at http://printer1.blogspot.com

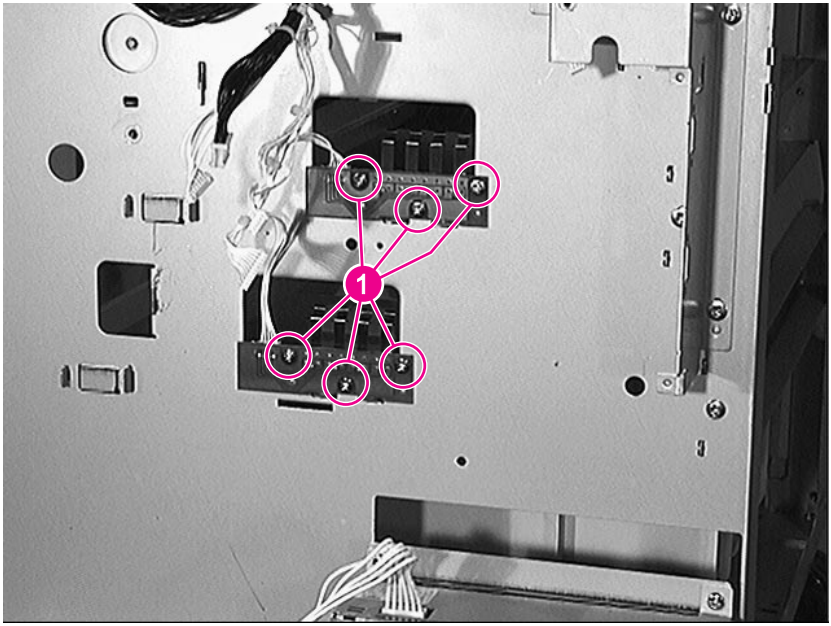

Figure 6-104 **Tray-Size Sensing PCA (2 of 2)**

4 To remove the size-sensing PCA, unplug the cable from the PCA, remove 3 screws from each PCB, and remove the PCA (callout 1).

Download Service Manual And Resetter Printer at http://printer1.blogspot.com

Power Supply

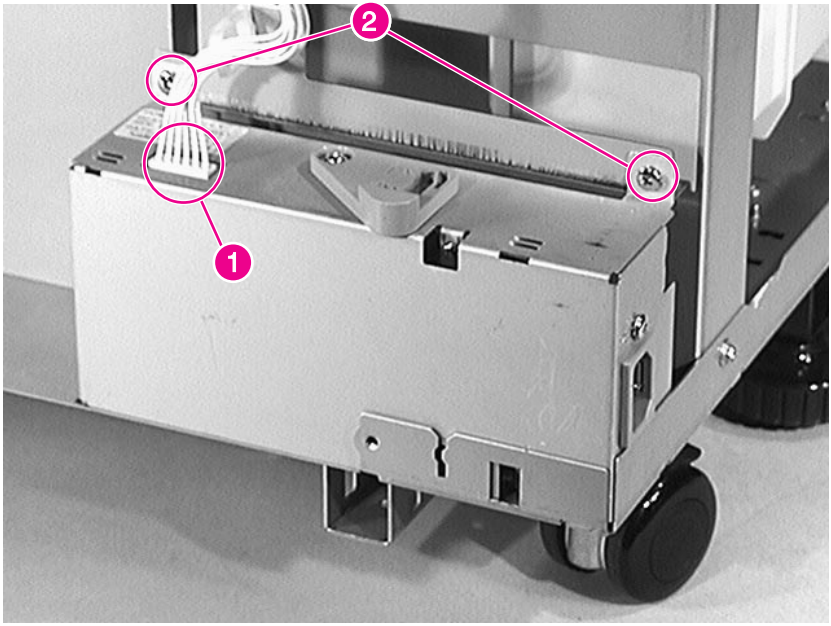

Figure 6-105 **Power Supply**

1. Remove the Back Cover (page 267) and the Left Cover (page 268).
2. Unplug the connector (callout 1) from the power supply. (Notice that the release tab is at the rear of the connector.)
3. Remove 2 screws (callout 2).
4. Lift the power supply off the locating pins, and slide it to the left to free it from the chassis.

To Reinstall:

1. Align the power supply with the locating tabs.
2. Plug in the power supply connector.

Download Service Manual And Resetter Printer at http://printer1.blogspot.com

Main Cable

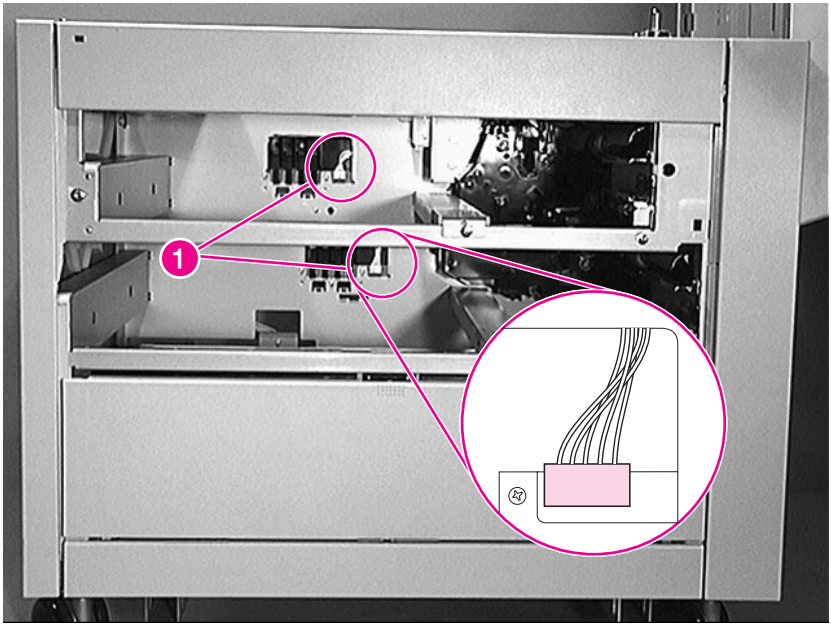

Figure 6-106 **Main Cable (1 of 2)**

1. Remove the Back Cover (page 267), the Left Cover (page 268), and Trays 4 and 5 (page 278).
2. Unplug both size-sensing connectors inside the 2 x 500-sheet Input Tray cavity (callout 1).

Download Service Manual And Resetter Printer at http://printer1.blogspot.com

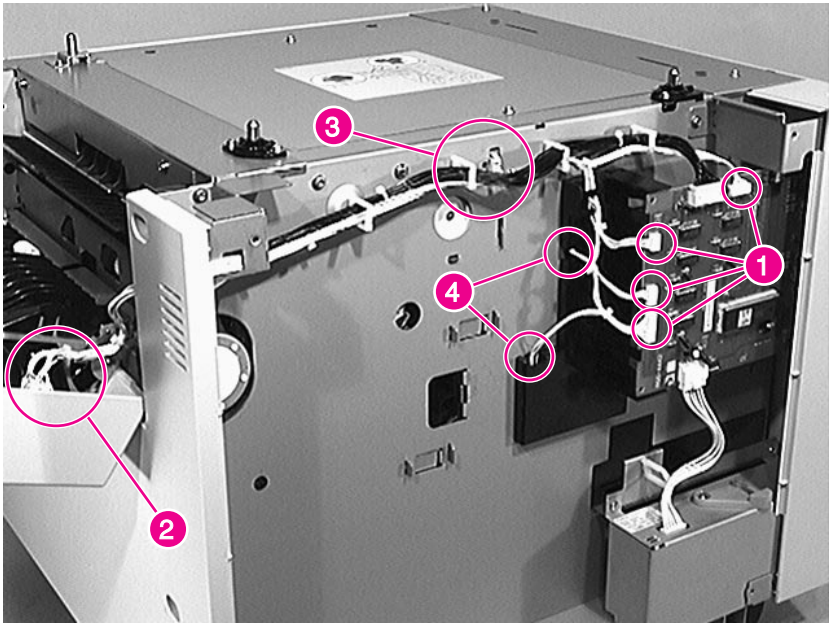

Figure 6-107 **Main Cable (2 of 2)**

3 Unplug 4 connectors from the controller PCA (callout 1), 3 from the Vertical Transfer Unit (callout 2), 1 from the Paper Deck Assembly (callout 3), and 2 from the size-sensing PCAs (callout 4).

4 Remove the main cable from the plastic clips.

Download Service Manual And Resetter Printer at http://printer1.blogspot.com

Storage Paper Tray

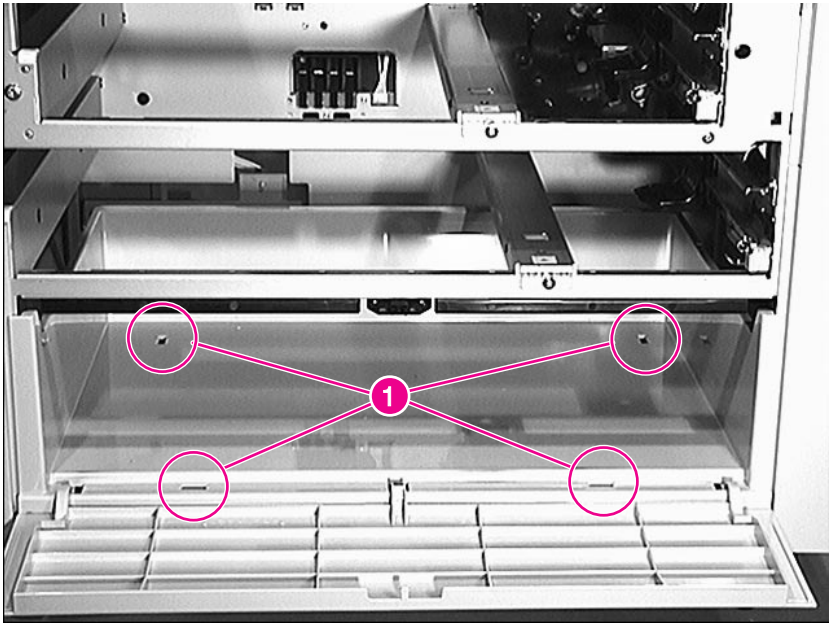

Figure 6-108 **Storage Paper Tray**

1. Remove Trays 4 and 5 (page 278).
2. Open the storage tray door.
3. Use a flat-blade screwdriver to release the tabs inside the holes indicated in figure 6-108 (callout 1).

Note Be sure to align the door's latch when you replace the Storage Paper Tray.

Download Service Manual And Resetter Printer at http://printer1.blogspot.com

Front Door (Storage Area)

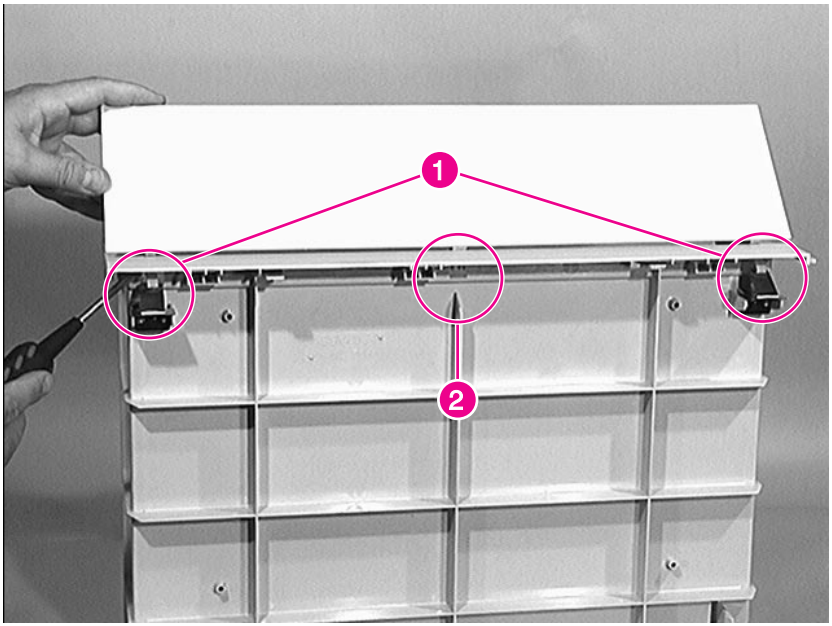

Figure 6-109 **Front Door (Storage Area)**

1. Remove the storage tray (page 291).
2. Release the tabs on both ends (callout 1).
3. Release the storage tray's door from the center tab (callout 2).

Download Service Manual And Resetter Printer at http://printer1.blogspot.com

Casters

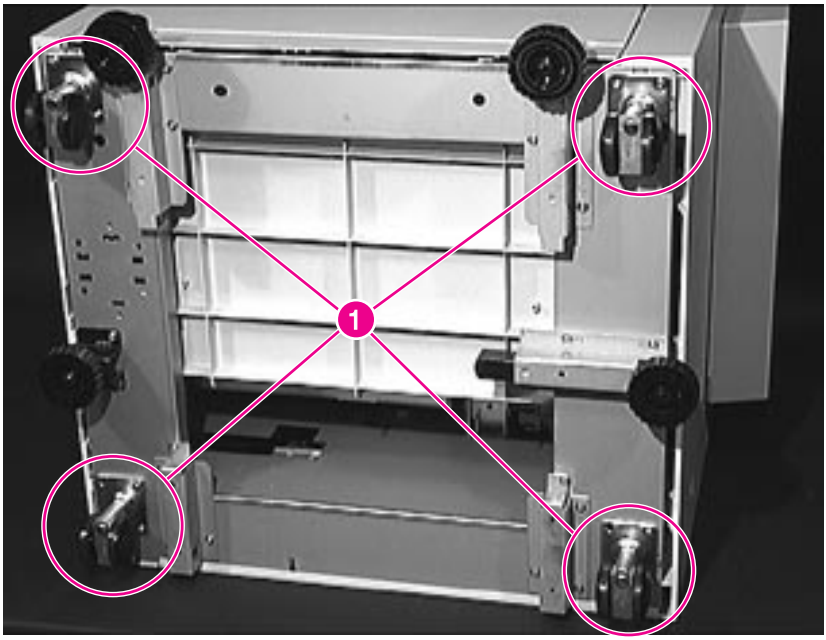

Figure 6-110 **Casters**

1. Remove the printer from the input device (page 157).
2. Place the 2 x 500-sheet Input Tray on its left side and locate the casters (callout 1).
3. Remove 2 screws from each caster and release the casters from the frame.

Note Be sure to tighten the screws securely when you re-install the new caster.

Download Service Manual And Resetter Printer at http://printer1.blogspot.com

Foot Tip and Adjustable Foot Tip (Stabilizing Feet)

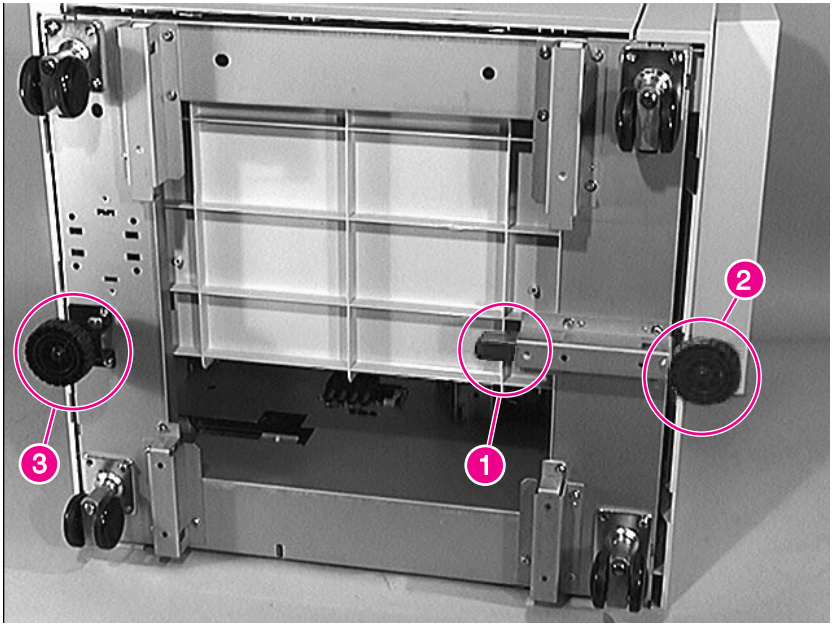

Figure 6-111 **Foot Tip and Adjustable Foot Tip**

1. Remove the printer from the input device (page 157).
2. Place the 2 x 500-sheet Input Tray on its left side and locate the Adjustable Foot Tip (callout 2).
3. Press at the location of callout 1 and slide the foot out to remove it.
4. Remove 2 screws that hold the stationary Foot Tip to the frame (callout 3). Remove the stationary Foot Tip.

Download Service Manual And Resetter Printer at http://printer1.blogspot.com

Locating Pins

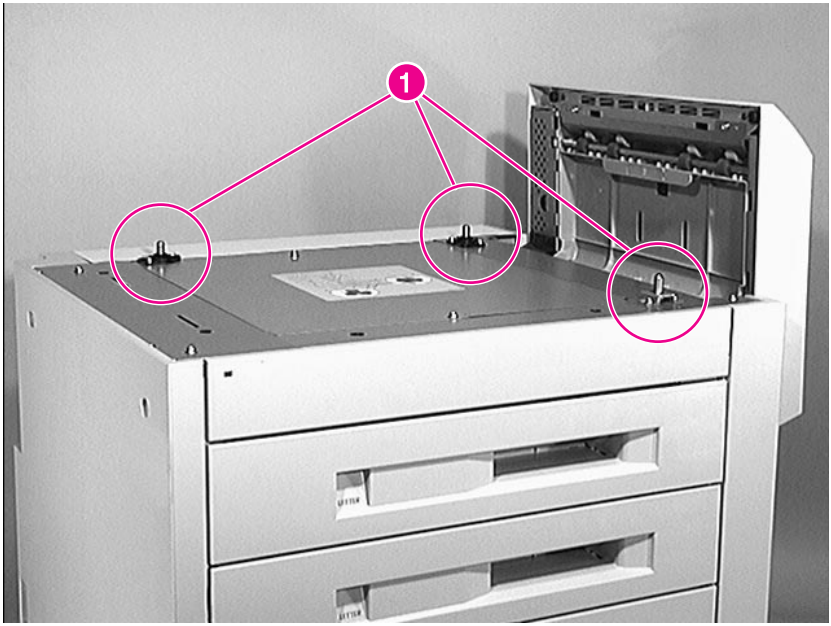

Figure 6-112 **Locating Pins**

1 Remove the printer from the input device (page 157).

2 Remove 2 screws each from the 3 locating pins (callout 1).

Download Service Manual And Resetter Printer at http://printer1.blogspot.com

Front LED PCA

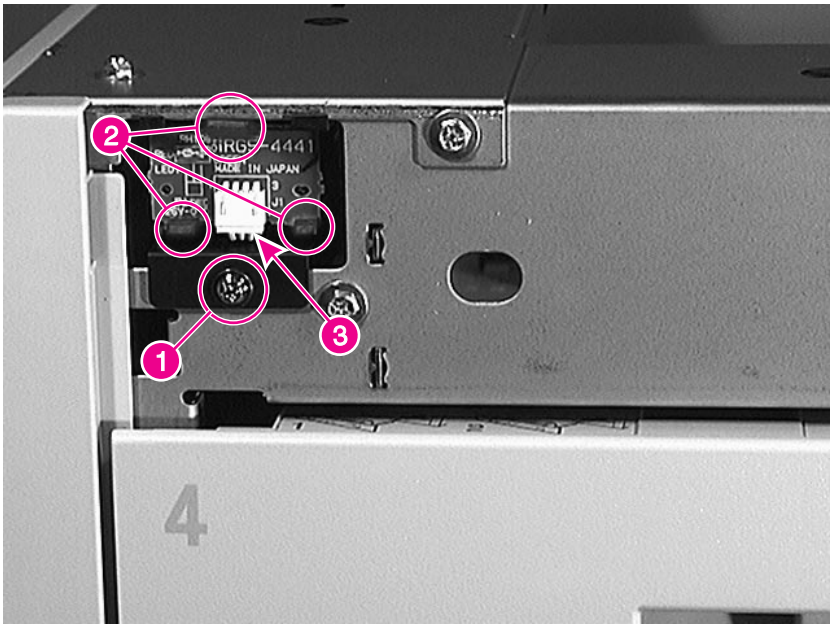

Figure 6-113 **Front LED PCA**

1. Remove the printer from the input device.
2. Remove the Front Top Cover. See table 6-92 on page 275.
3. Remove 1 screw (callout 1).
4. Release the tabs and remove the LED PCA (callout 2).
5. Unplug the cable from the PCA (callout 3).

Note Guide the cable into the correct position when you replace it.

Download Service Manual And Resetter Printer at http://printer1.blogspot.com

7-bin Tabletop Mailbox Removal and Replacement

Note Reinstallation is generally the reverse of the removal process. Carefully follow any additional instructions provided under “To Reinstall.”

Orientation of the 7-bin Tabletop Mailbox - - - - - - - - - 298
Front Cover - 299
Back Cover- 302
Top Cover - 304
Controller PCA - 308
Power Supply - 309
Right Door Assembly (Paper Path Cover) - - - - - - - - - - 310
Face-down Bins - 314
Empty Bin Sensor PCA - 317
Full Bin and Interlock Sensor PCA - - - - - - - - - - - - - 319
LED PCA- 321
Face-up Sensors PCA - 322
Reversing Mechanism Motor - - - - - - - - - - - - - - - - 323
Face-up/Diverter Assembly (Flipper) - - - - - - - - - - - - 325
Short Tray 7 - 328
Solenoid Reversing Mechanism- - - - - - - - - - - - - - - 329
Flipper Solenoid - 330
Handle - 331
Latching Mechanism - 332
Cover Latch - 333

Download Service Manual And Resetter Printer at http://printer1.blogspot.com

Orientation of the 7-bin Tabletop Mailbox

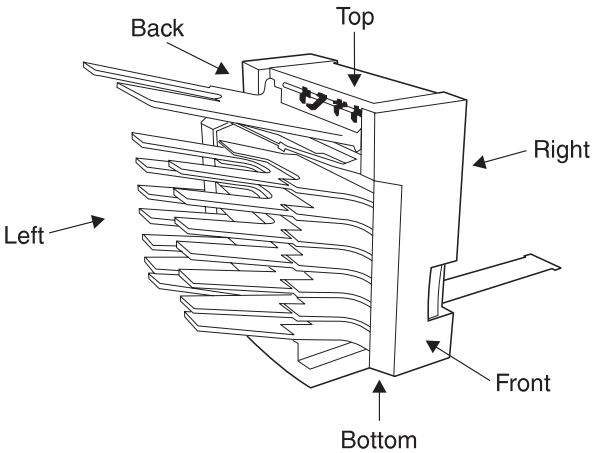

Figure 6-114 **Orientation of the 7-bin Tabletop Mailbox**

Note Before you begin any removal or replacement procedure, turn off all equipment and unplug the 7-bin Tabletop Mailbox power supply cable.

To remove the 7-bin Tabletop Mailbox from the printer, see page 159.

Download Service Manual And Resetter Printer at http://printer1.blogspot.com

Front Cover

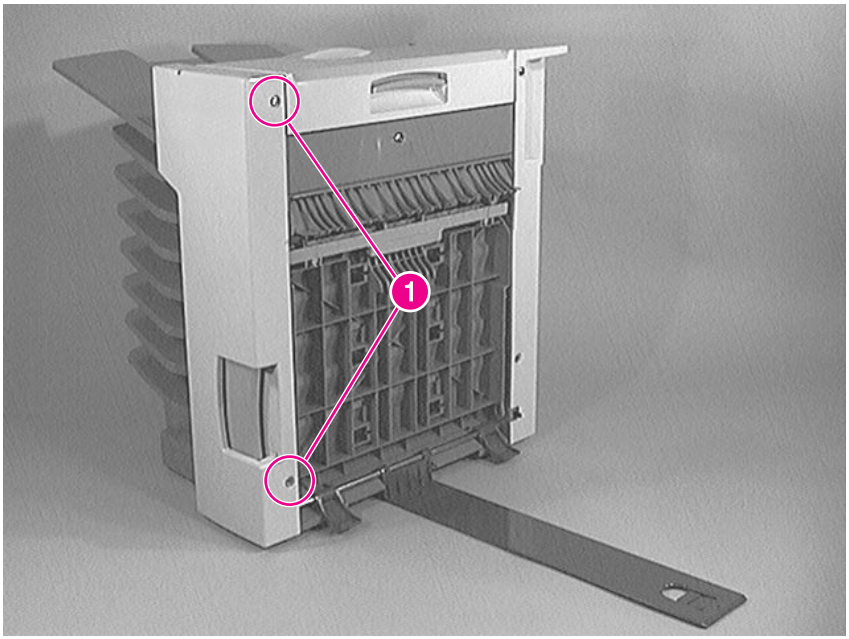

Figure 6-115 **Front cover (1 of 3)**

1 Remove 2 screws (callout 1).

Download Service Manual And Resetter Printer at http://printer1.blogspot.com

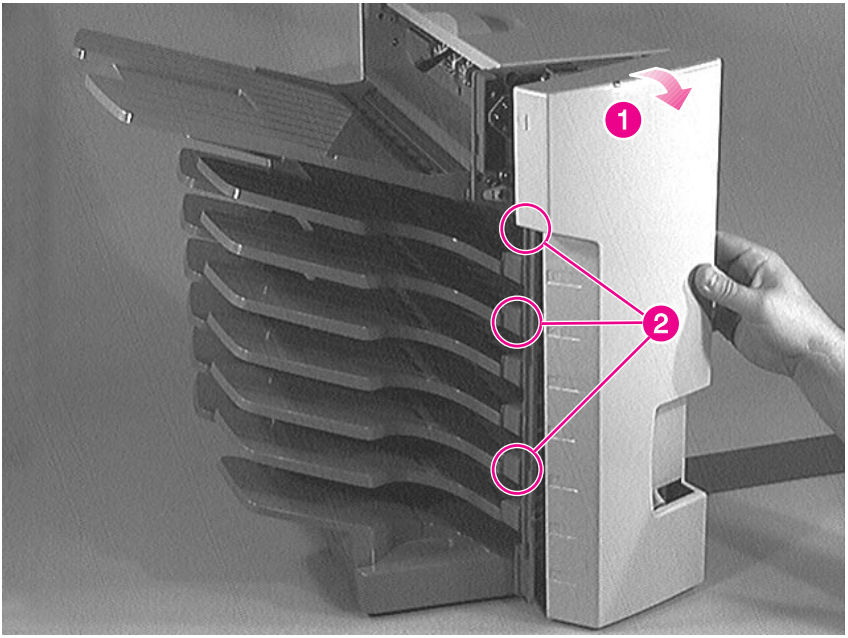

Figure 6-116 **Front cover (2 of 3)**

2 Loosen the right side of the Front Cover and pull it toward you approximately 0.5 inch (1.5 centimeters) to clear the tabs (callout 1).

3 Release and clear the tabs on the left side of the Front Cover (callout 2).

Download Service Manual And Resetter Printer at http://printer1.blogspot.com

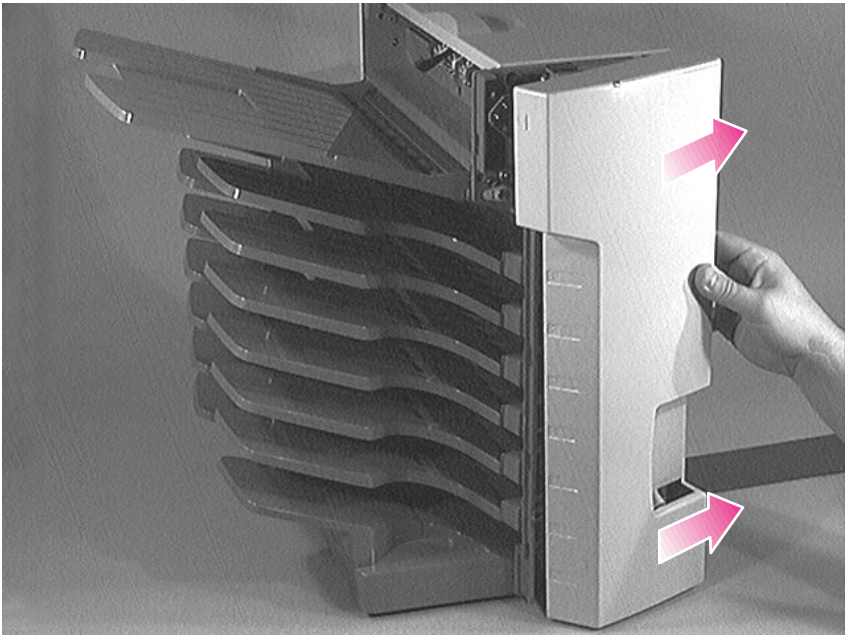

Figure 6-117 **Front cover (3 of 3)**

CAUTION Be careful not to damage the handle as you remove or replace the cover. The handle can easily catch on the cover.

4 To clear the handle, rotate the Front Cover to the right, and remove it as shown in figure 6-117.

To replace

Note the Caution above.

Download Service Manual And Resetter Printer at http://printer1.blogspot.com

Back Cover

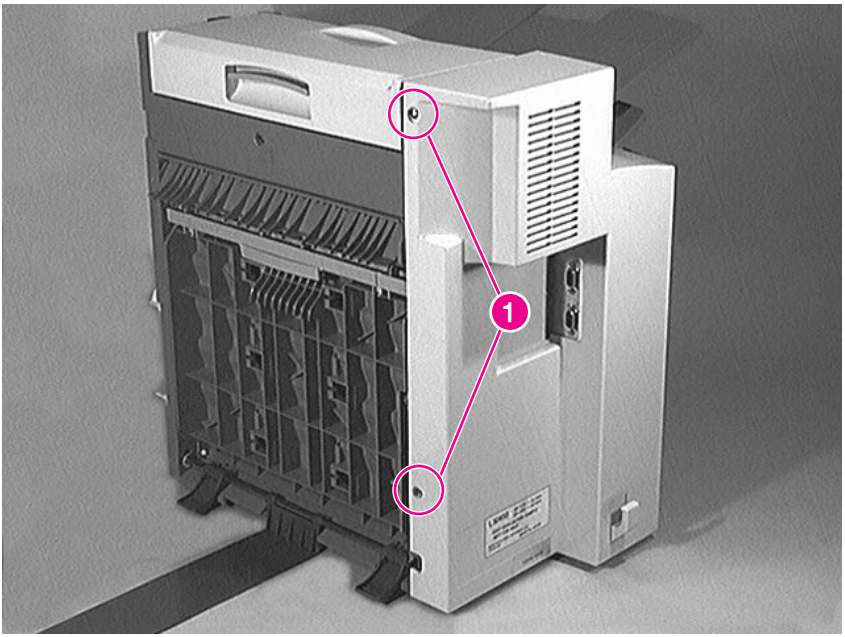

Figure 6-118 **Back cover (1 of 2)**

1 Remove 2 screws (callout 1).

Download Service Manual And Resetter Printer at http://printer1.blogspot.com

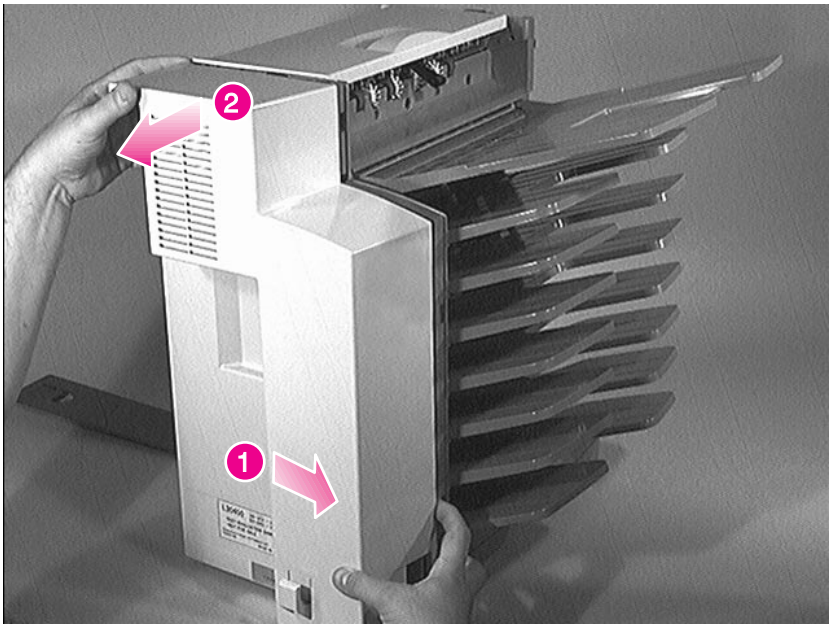

Figure 6-119 **Back cover (2 of 2)**

2 Pull the Back Cover toward you to remove it. Release corner indicated by callout 1 first.

Download Service Manual And Resetter Printer at http://printer1.blogspot.com

Top Cover

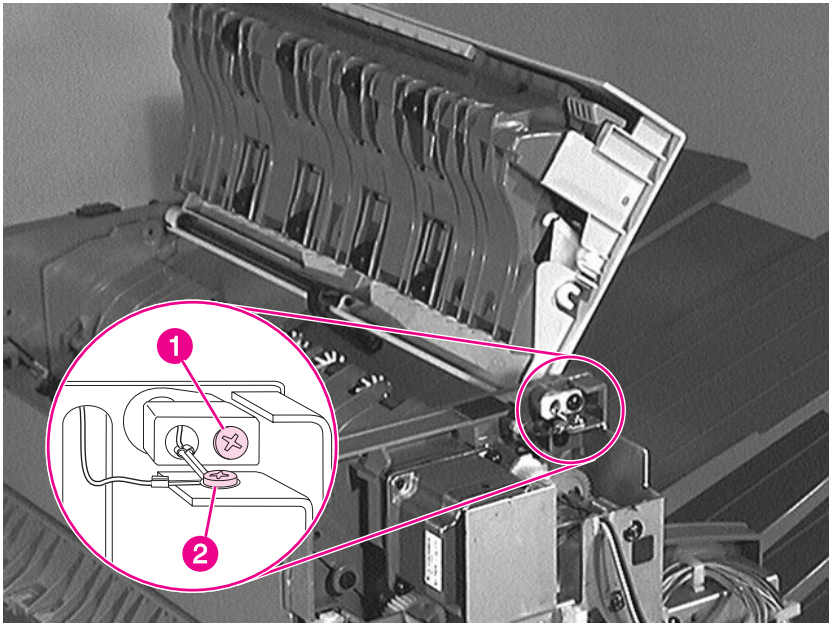

Figure 6-120 **Top cover (1 of 4)**

1. Remove the Front Cover (page 299) and the Back Cover (page 302).
2. Open the Top Cover, and remove the Top Cover's screw and bushing (callout 1).
3. Remove the grounding screw (callout 2).

Download Service Manual And Resetter Printer at http://printer1.blogspot.com

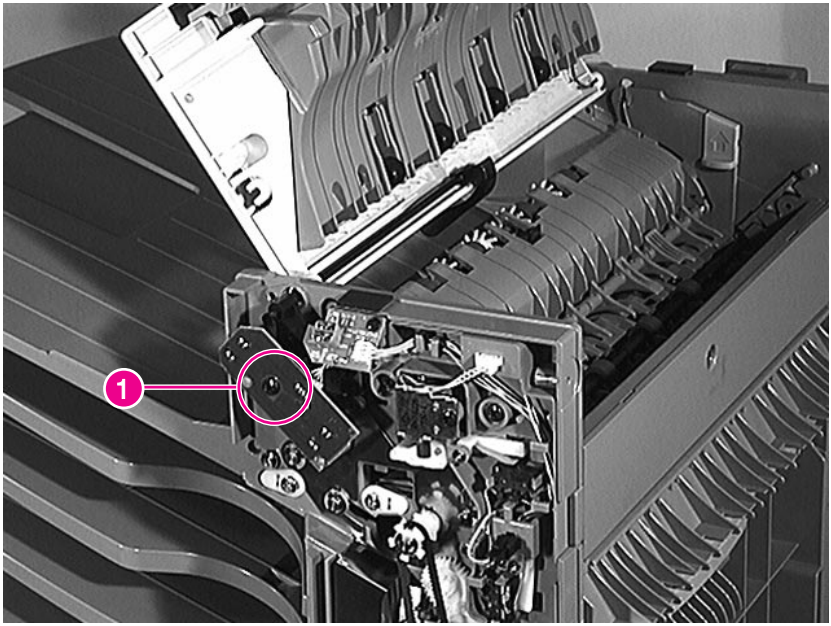

Figure 6-121 **Top cover (2 of 4)**

4 Remove the screw from the Face-up Bin-Full PCA (callout 1).

Download Service Manual And Resetter Printer at http://printer1.blogspot.com

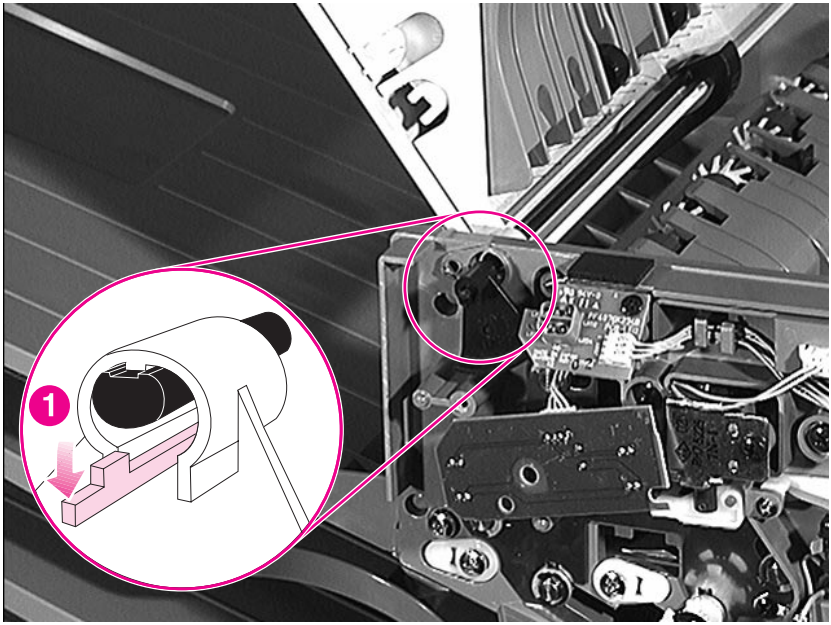

Figure 6-122 **Top cover (3 of 4)**

5 To take out the flag, push down the plastic shaft carefully, as shown in callout 1.

Download Service Manual And Resetter Printer at http://printer1.blogspot.com

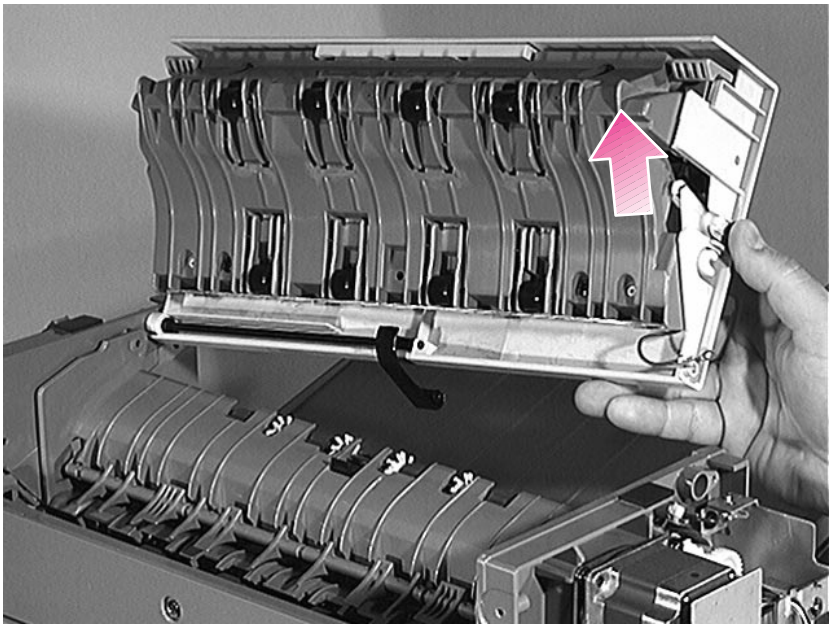

Figure 6-123 **Top cover (4 of 4)**

6 To remove the Top Cover lift the right side first as shown.

Download Service Manual And Resetter Printer at http://printer1.blogspot.com

Controller PCA

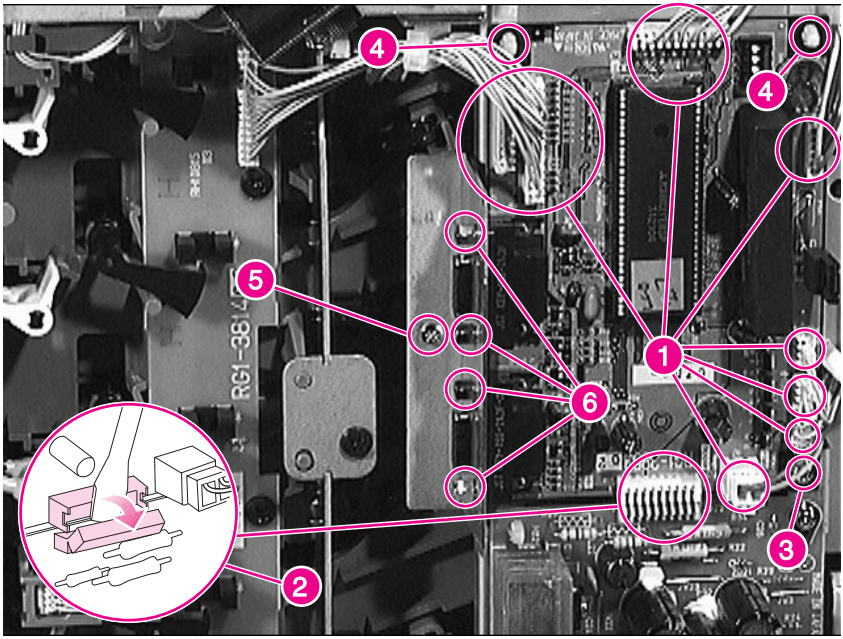

Figure 6-124 **Mailbox Controller PCA**

1. Remove the Back Cover (page 302).
2. Unplug 8 connectors from the Controller PCA (callout 1).
3. To unplug connector J202, pry it open with a flat blade screwdriver (callout 2).
4. Remove 1 screw from the Controller PCA below Connector J3 (callout 3).
5. Remove the PCA from its 2 plastic pins (callout 4).
6. Remove 1 screw from the plate (callout 5).
7. Remove 4 hex screws from the connectors on the metal plate (callout 6).
8. Remove the PCA controller.

Note When you replace the Controller PCA, be sure to replace connector J202 (callout 1 in Figure 6-125).

Download Service Manual And Resetter Printer at http://printer1.blogspot.com

Power Supply

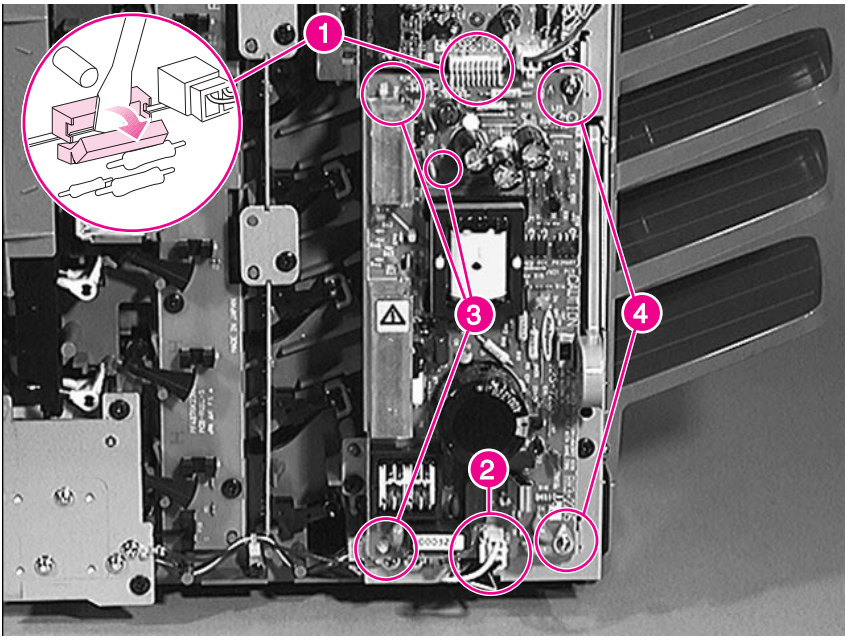

Figure 6-125 **Mailbox Power Supply**

1. Remove the Back Cover (page 302).
2. Release connector J202 with a flat blade screwdriver and unplug it (callout 1).
3. At the bottom of the power supply, unplug J201 (callout 2).
4. Remove 2 screws (callout 4).
5. Pull the power supply from its 3 plastic pins (callout 3).

Note Be sure to replace connector J202 (callout 1) and the Power Supply Connector (callout 2).

Download Service Manual And Resetter Printer at http://printer1.blogspot.com

Right Door Assembly (Paper Path Cover)

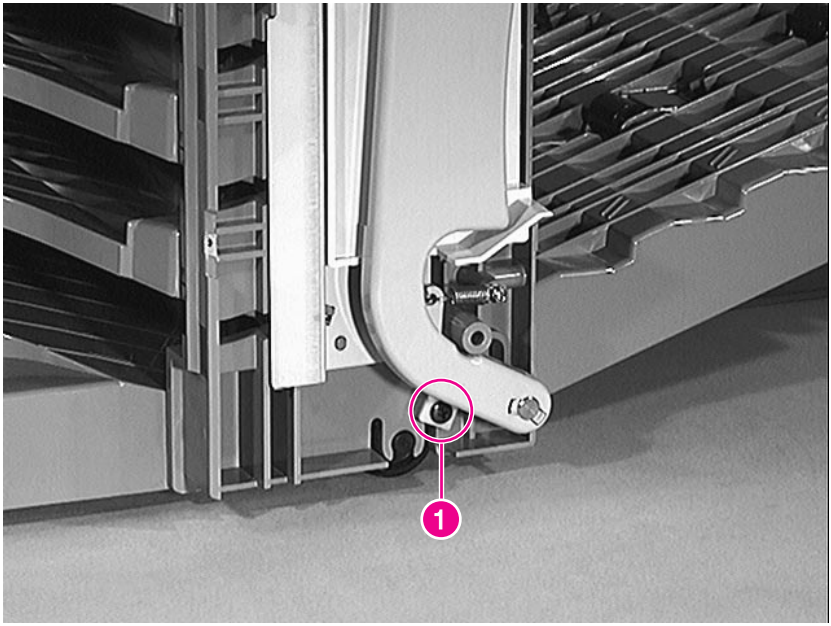

Figure 6-126 **Right Door Assembly (Paper Path Cover) (1 of 5)**

1. Remove the Front Cover (page 299) and the Back Cover (page 302).
2. Remove 1 screw from the front side and the bushing below the handle (callout 1).

Download Service Manual And Resetter Printer at http://printer1.blogspot.com

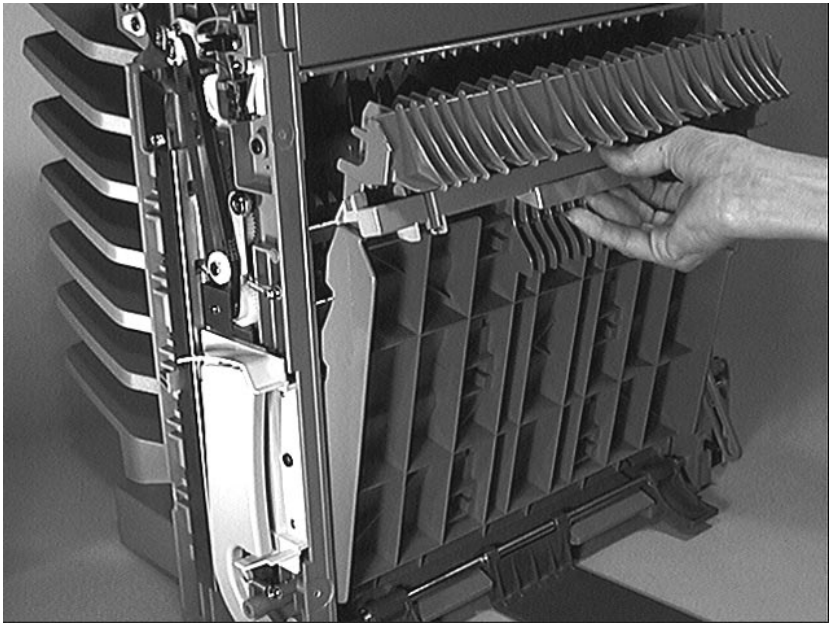

Figure 6-127 **Right Door Assembly (Paper Path Cover) (2 of 5)**

1 Grasp the green handle and pull up slightly, then out, to open the Paper Path Cover.

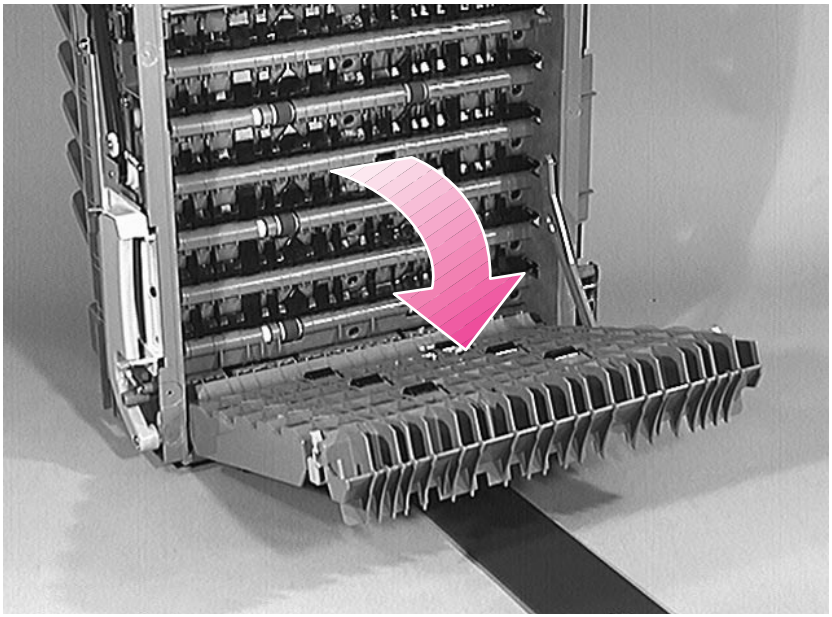

Figure 6-128 **Right Door Assembly (Paper Path Cover) (3 of 5)**

Download Service Manual And Resetter Printer at http://printer1.blogspot.com

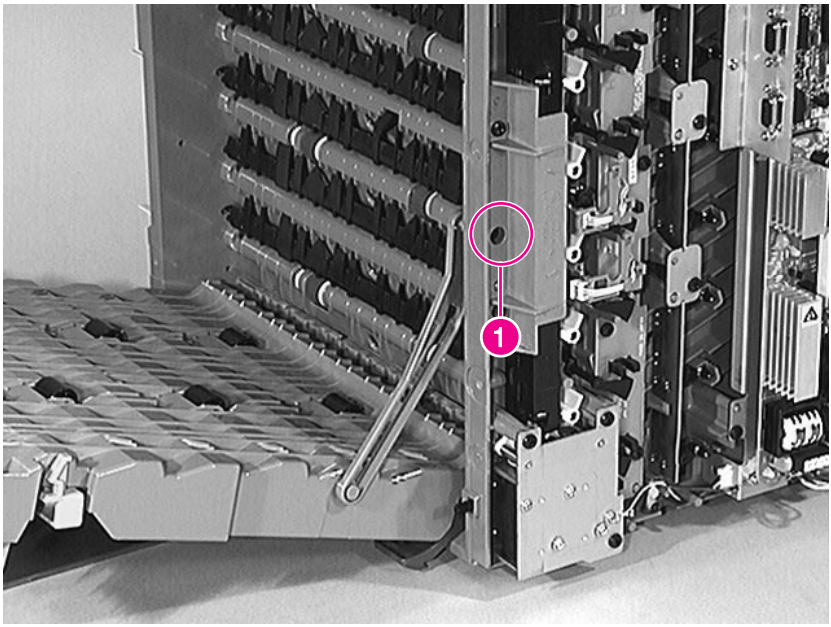

Figure 6-129 **Right Door Assembly (Paper Path Cover) (3 of 5)**

2 Remove the screw of the holding arm (callout 1) and release the arm from the Right Door Assembly.

Download Service Manual And Resetter Printer at http://printer1.blogspot.com

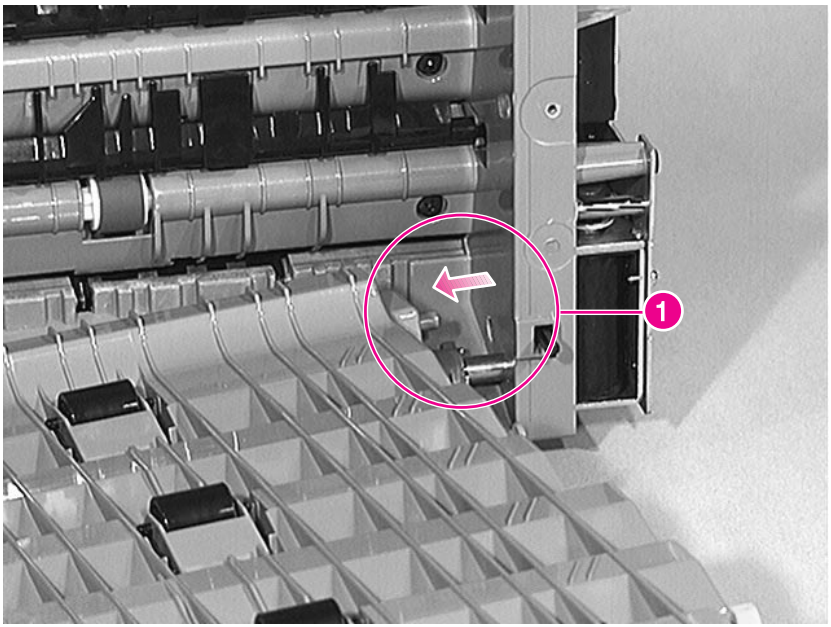

Figure 6-130 **Right Door Assembly (Paper Path Cover) (4 of 5)**

3 Release the plastic pin on the right end, and remove the paper path cover as shown in figure 6-130 (callout 1).

Download Service Manual And Resetter Printer at http://printer1.blogspot.com

Face-down Bins

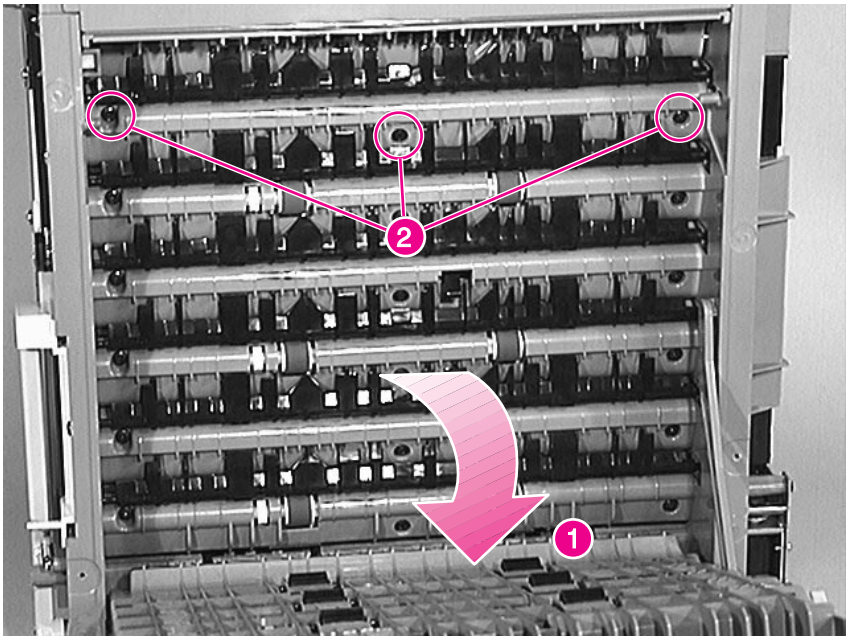

Figure 6-131 **Face-down Bins (1 of 3)**

Note Bins 1, 3, and 5 each have one rear roller. Bins 2, 4, and 6 each have 2 rear rollers. The procedure for removing and replacing each of the bins is the same.

1. Remove the Front Cover (page 299) and the Back Cover (page 302).
2. Open the right door assembly (paper path cover) (callout 1)
   Or
   Remove the right door assembly to remove bin 5 or 6.
3. Remove 3 screws at the right side of the unit from the bin that needs to be replaced (callout 2).

Download Service Manual And Resetter Printer at http://printer1.blogspot.com

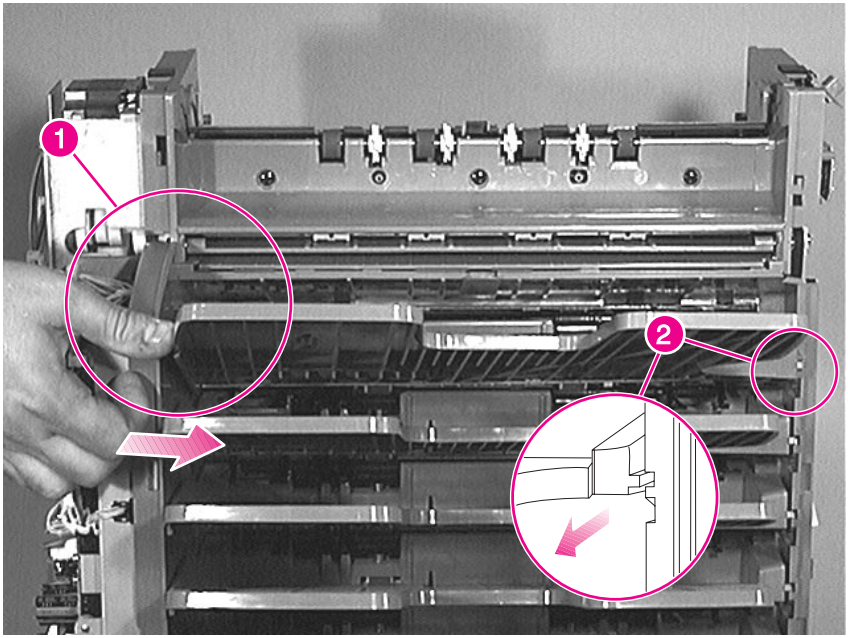

Figure 6-132 **Face-down Bins (2 of 3)**

4 From the back side of the device, push the bin as it is shown in callout 1.

5 Grasp the bin from the right side, and pull it straight out. Note the position of the tab (callout 2).

Download Service Manual And Resetter Printer at http://printer1.blogspot.com

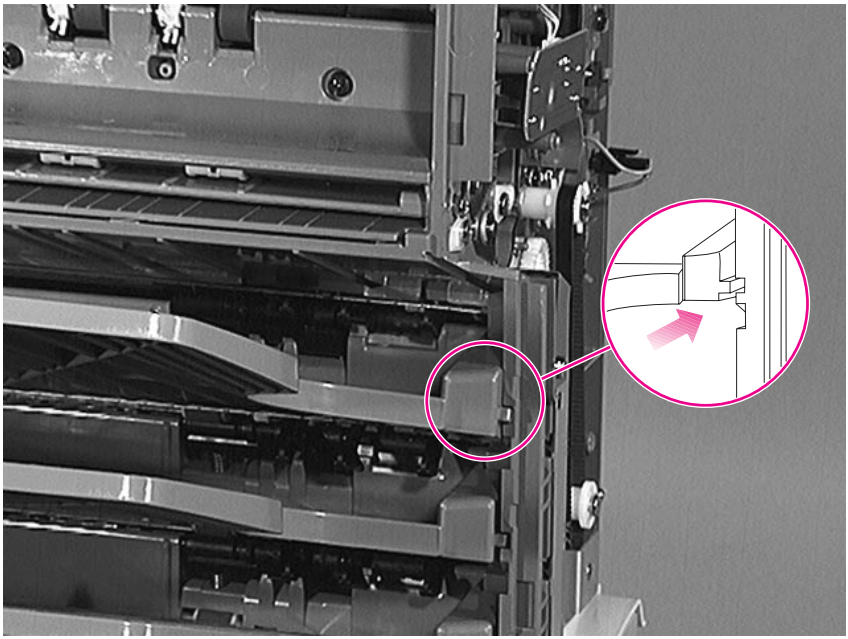

Figure 6-133 **Face-down Bins (3 of 3)**

To Reinstall:

1. Guide the empty bin sensor in the slot at the back side (figure 6-132, callout 1).
2. Make sure that the tabs are in place as shown in figure 6-133 callout 1.
3. Make sure that the holes for the 3 screws align with the holes of the tray.
4. Replace 3 screws (figure 6-131, callout 2).

Download Service Manual And Resetter Printer at http://printer1.blogspot.com

Empty Bin Sensor PCA

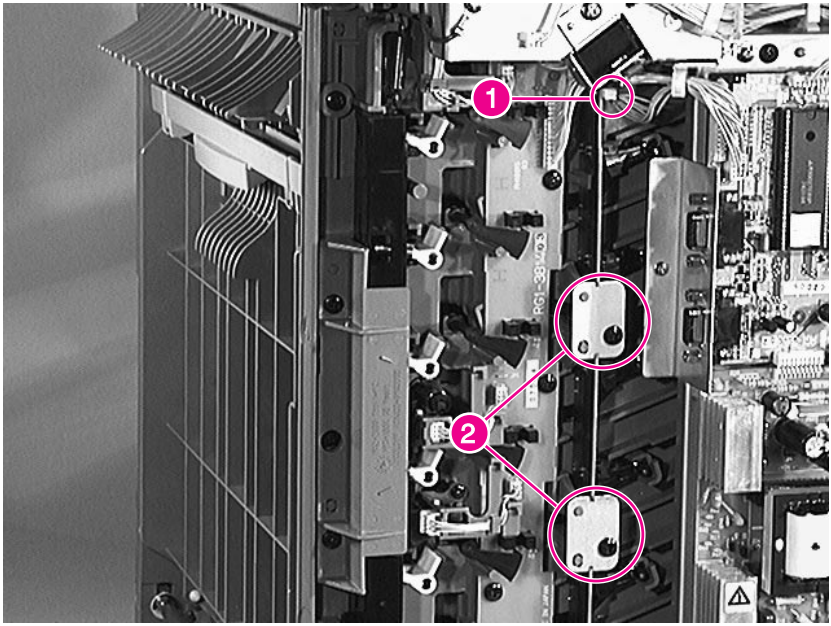

Figure 6-134 **Empty Bin Sensor PCA (1 of 2)**

1. Remove the Back Cover (page 302).
2. Unplug J305 (the topmost connector) from the Empty Bin Sensor PCA (callout 1).
3. Remove 2 screws and the metal plates that hold the Empty Bin Sensor PCA (callout 2).

Download Service Manual And Resetter Printer at http://printer1.blogspot.com

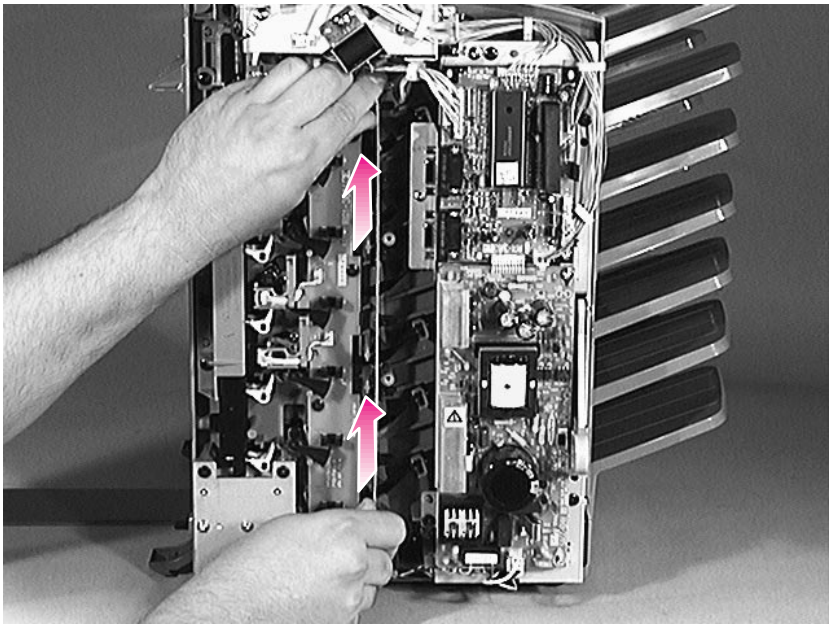

Figure 6-135 **Empty Bin Sensor PCA (2 of 2)**

4 Lift up the Empty Bin Sensor PCA to free it from the sensor flags, and pull it out as shown.

Download Service Manual And Resetter Printer at http://printer1.blogspot.com

Full Bin and Interlock Sensor PCA

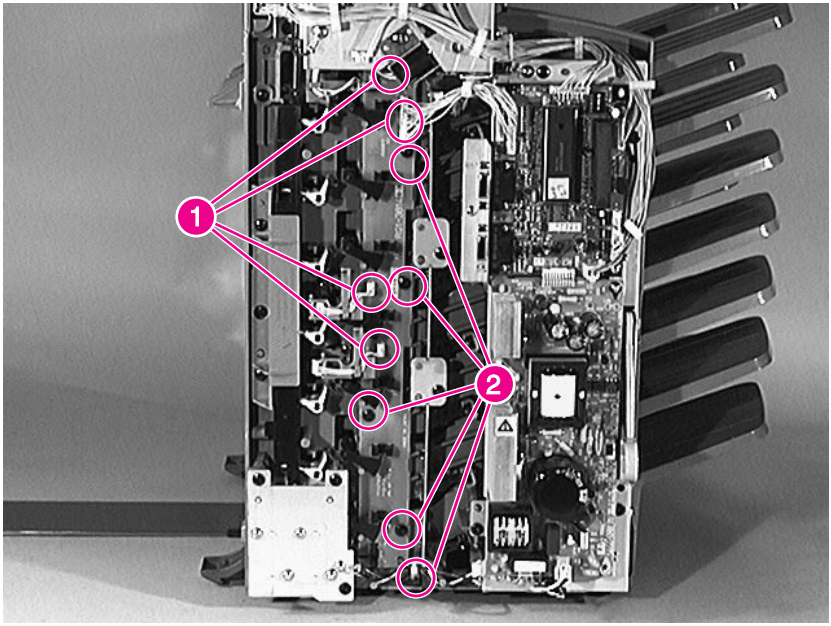

Figure 6-136 **Full Bin and Interlock Sensor PCA (1 of 2)**

1. Remove the Back Cover (page 302) and the Empty Bin Sensor PCA (page 317).
2. Unplug 4 connectors (J301, J302, J303, and J304). See callout 1.
3. Remove 4 screws from the Full Bin and Interlock Sensor PCA and one screw from the harness (callout 2).

Download Service Manual And Resetter Printer at http://printer1.blogspot.com

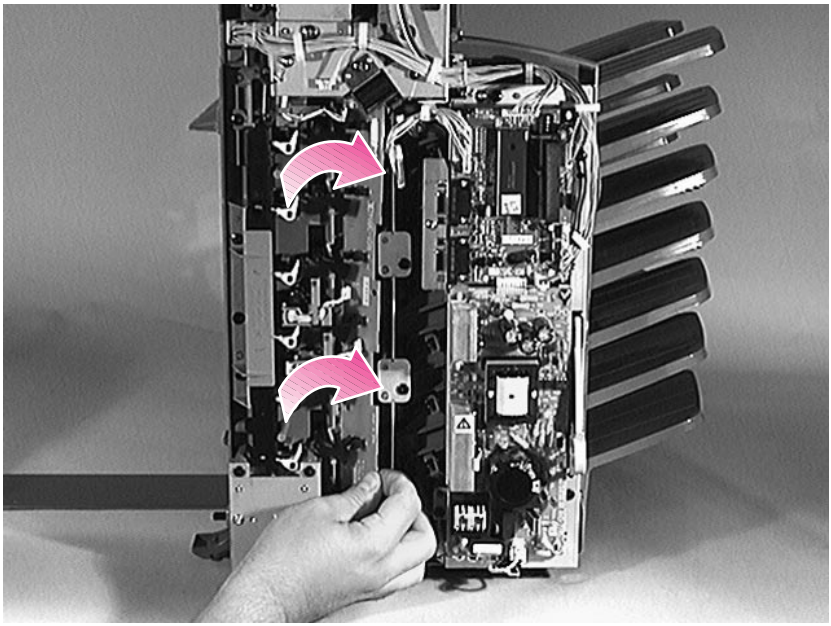

Figure 6-137 **Full Bin and Interlock Sensor PCA (2 of 2)**

4 Rotate the PCA toward the right, and then pull it out as shown.

Note The reassembly procedure is the reverse of the disassembly procedure.

Download Service Manual And Resetter Printer at http://printer1.blogspot.com

LED PCA

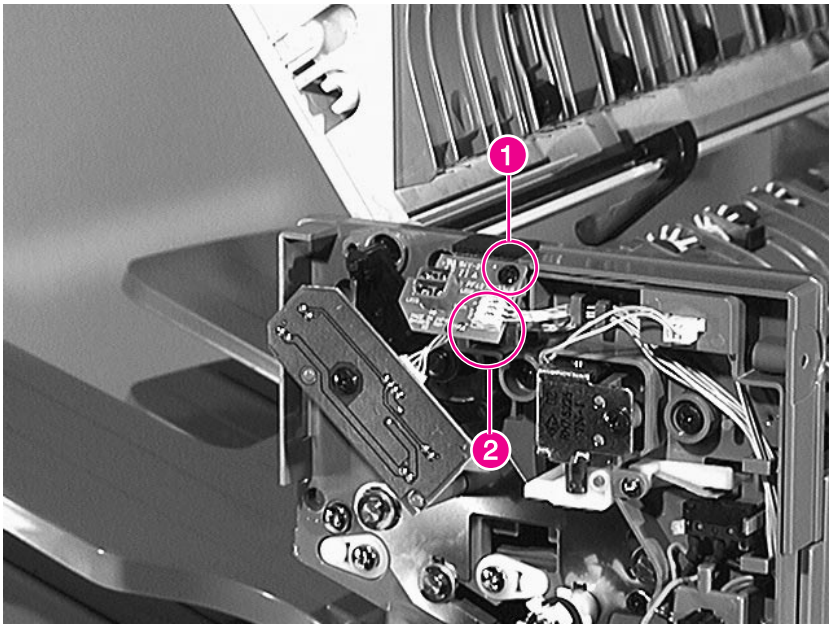

Figure 6-138 **LED PCA**

1. Remove the Front Cover (page 299).
2. Remove 1 screw (callout 1).
3. Unplug J307 from the LED PCA, and remove the LED PCA (callout 2).

Note The reassembly procedure is the reverse of the disassembly procedure.

Download Service Manual And Resetter Printer at http://printer1.blogspot.com

Face-up Sensors PCA

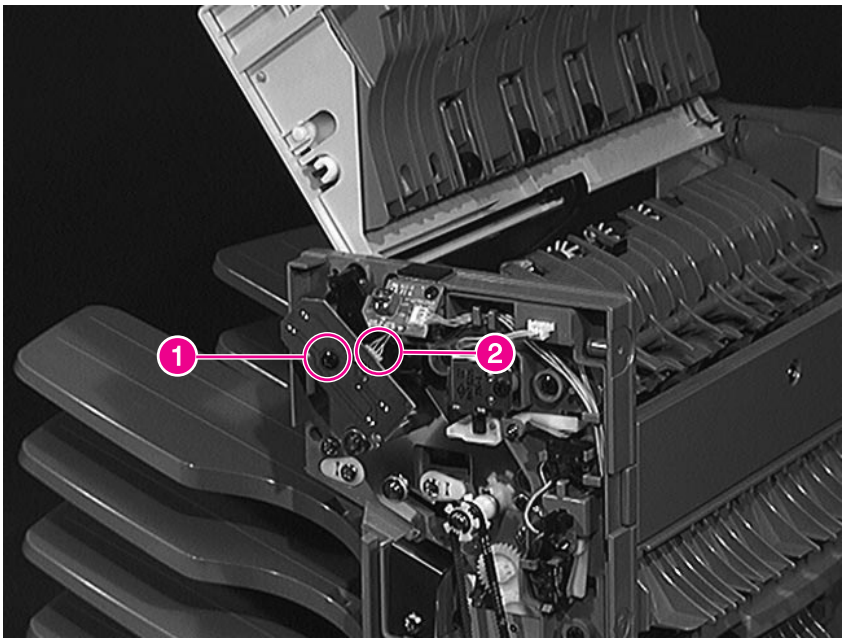

Figure 6-139 **Face-up Sensors PCA**

1. Remove the Front Cover (page 299).
2. Remove 1 screw (callout 1).
3. Unplug J306 from the Empty Bin Sensor PCA, and remove the Empty Bin Sensor PCA (callout 2).

Download Service Manual And Resetter Printer at http://printer1.blogspot.com

Reversing Mechanism Motor

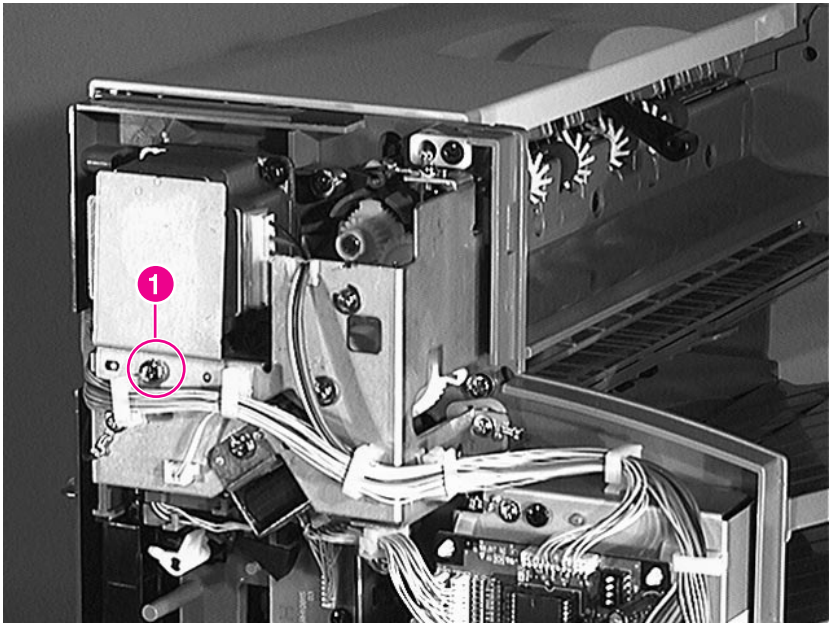

Figure 6-140 **Reversing Mechanism Motor (1 of 2)**

1 Remove the Back Cover (page 302).

2 Remove 1 screw from the metal plate (callout 1).

Download Service Manual And Resetter Printer at http://printer1.blogspot.com

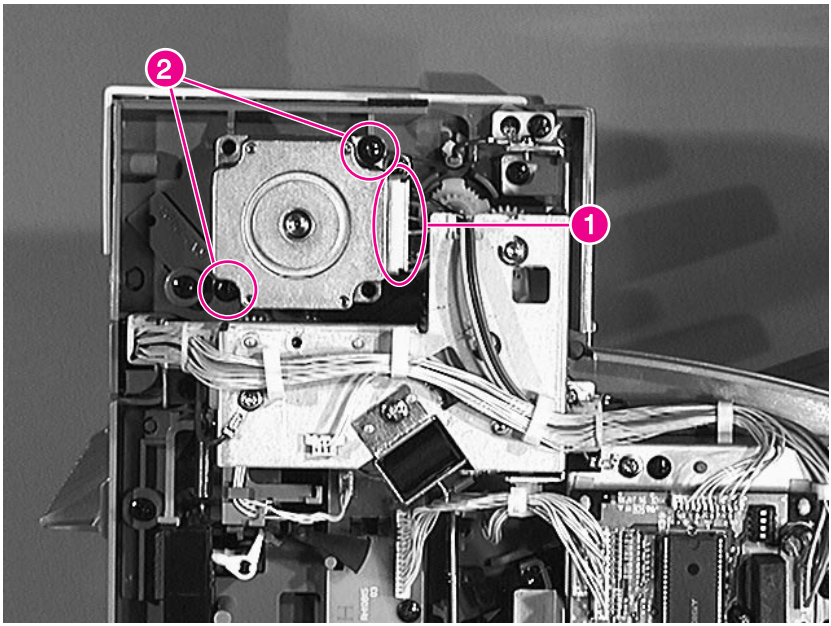

Figure 6-141 **Reversing Mechanism Motor (2 of 2)**

3 Unplug the motor's connector (callout 1).

4 Remove 2 screws (callout 2) and the motor.

CAUTION Do not damage the belt as you remove the motor.

Note The reassembly procedure is the reverse of the disassembly procedure.

Download Service Manual And Resetter Printer at http://printer1.blogspot.com

Face-up/Diverter Assembly (Flipper)

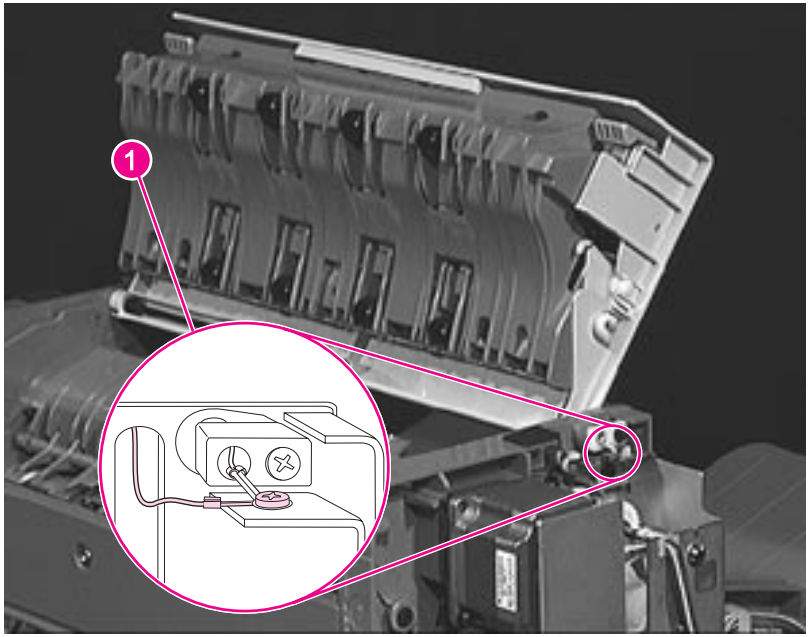

Figure 6-142 **Face-up/Diverter Assembly (Flipper) (1 of 3)**

1. Remove the Front Cover (page 299) and the Back Cover (page 302).
2. Open the Top Cover as shown.
3. Remove the grounding screw (callout 1) at the top back side (figure 6-142).

Download Service Manual And Resetter Printer at http://printer1.blogspot.com

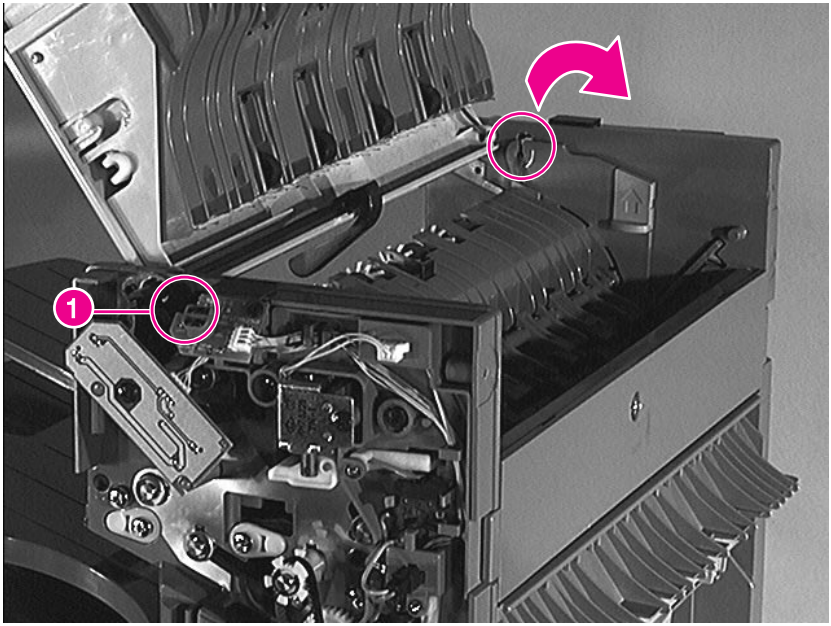

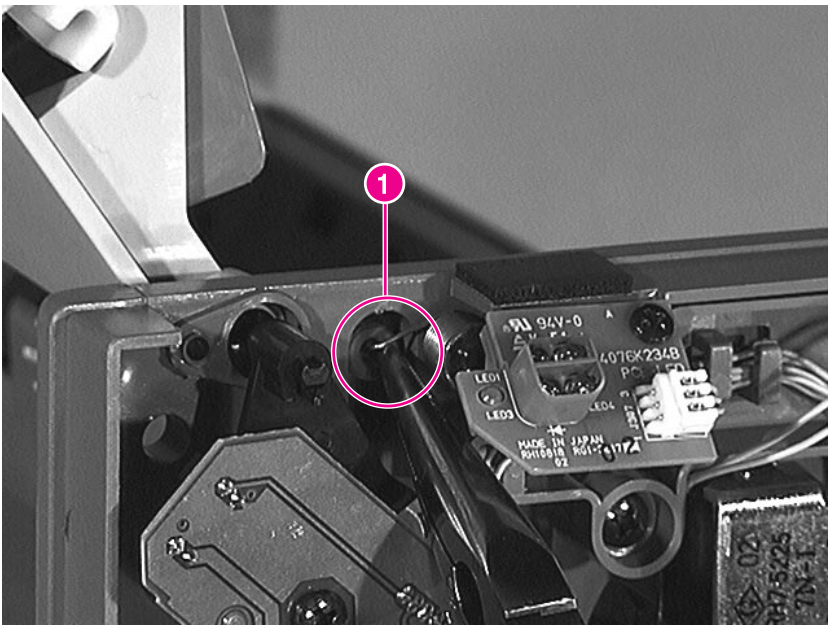

Figure 6-143 **Face-up/Diverter Assembly (Flipper) (2 of 3)**

4 Using pliers, release the springs at each end of the assembly (second figure on this page, callout 1).

Download Service Manual And Resetter Printer at http://printer1.blogspot.com

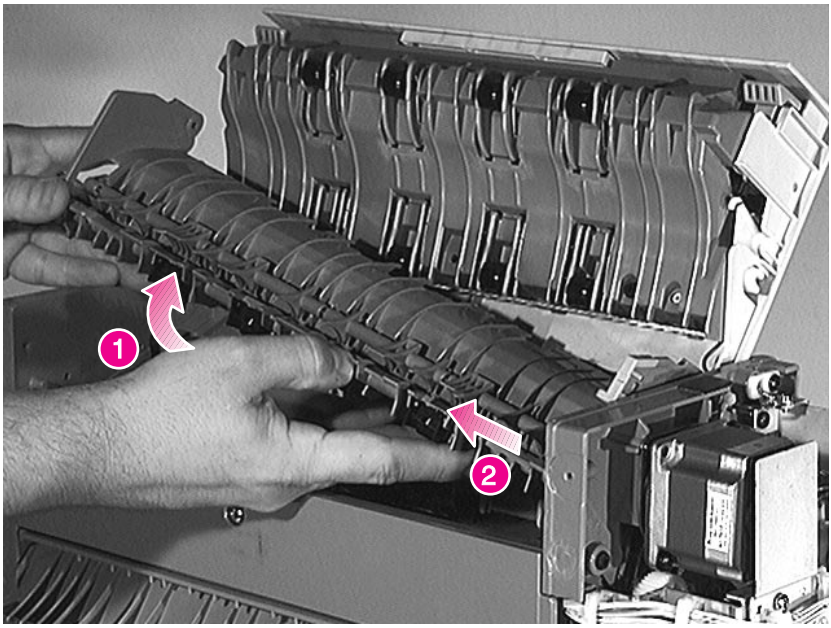

Figure 6-144 **Face-up/Diverter Assembly (Flipper) (3 of 3)**

5 Rotate the assembly upward, and then release side 1 (callout 1) first and side 2 (callout 2) second. Remove the assembly as shown.

Note The reassembly procedure is the reverse of the disassembly procedure.

Download Service Manual And Resetter Printer at http://printer1.blogspot.com

Short Tray 7

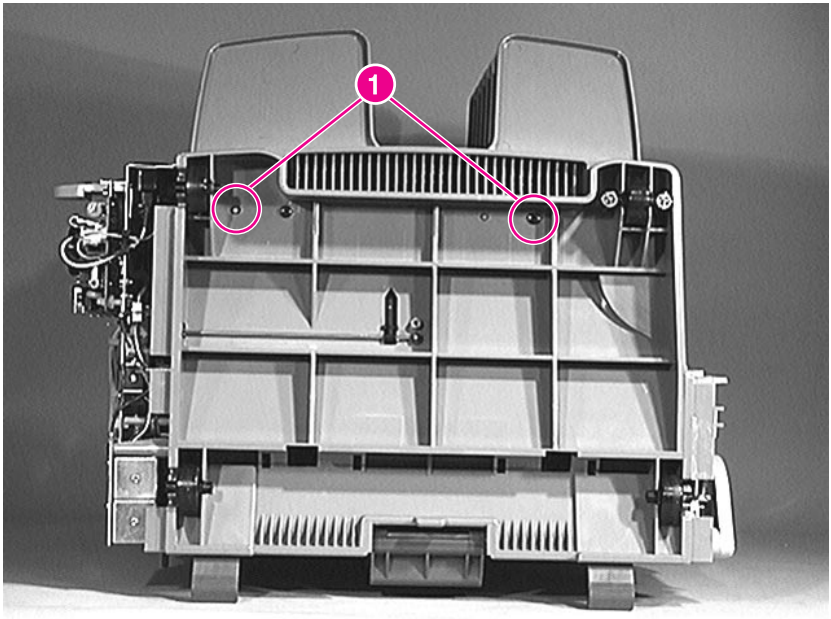

Figure 6-145 **Short Tray 7**

1. Place the 7-bin Tabletop Mailbox on its side as shown.
2. Remove 2 screws from the bottom (callout 1).
3. Remove the tray.

Note The reassembly procedure is the reverse of the disassembly procedure.

Download Service Manual And Resetter Printer at http://printer1.blogspot.com

Solenoid Reversing Mechanism

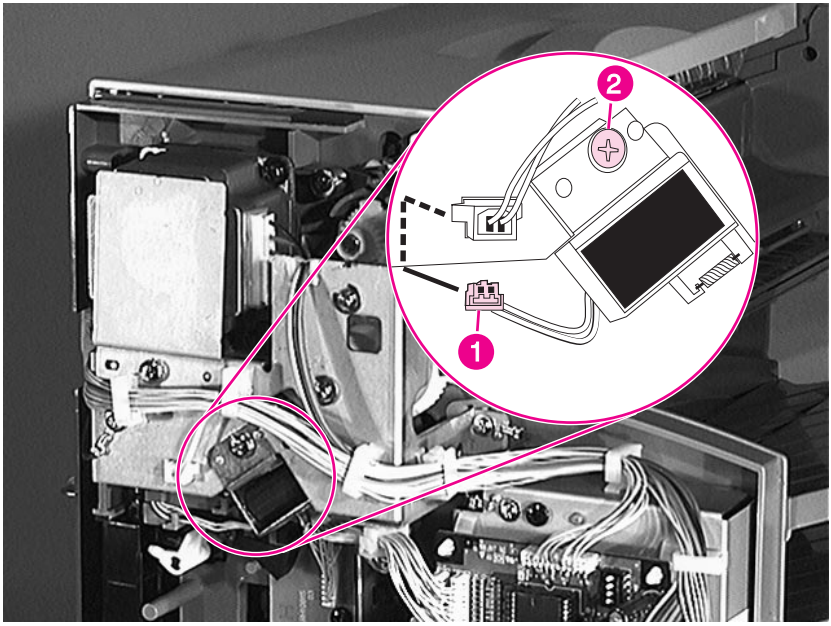

Figure 6-146 **Solenoid Reversing Mechanism**

1. Remove the Back Cover (page 302).
2. Unplug the cable from inside the bracket (callout 1).
3. Remove 1 screw and the solenoid (callout 2).

Note The reassembly procedure is the reverse of the disassembly procedure.

Download Service Manual And Resetter Printer at http://printer1.blogspot.com

Flipper Solenoid

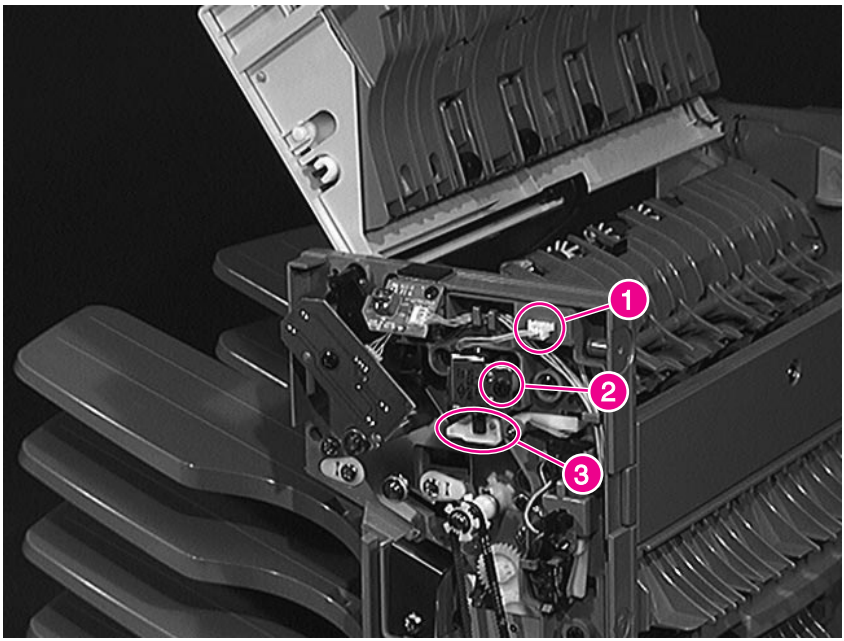

Figure 6-147 **Flipper Solenoid**

1. Remove the Front Cover (page 299).
2. Unplug the cable (callout 1).
3. Remove 1 screw and the solenoid (callout 2).
4. Release the solenoid along with the plastic actuator.

Download Service Manual And Resetter Printer at http://printer1.blogspot.com

Handle

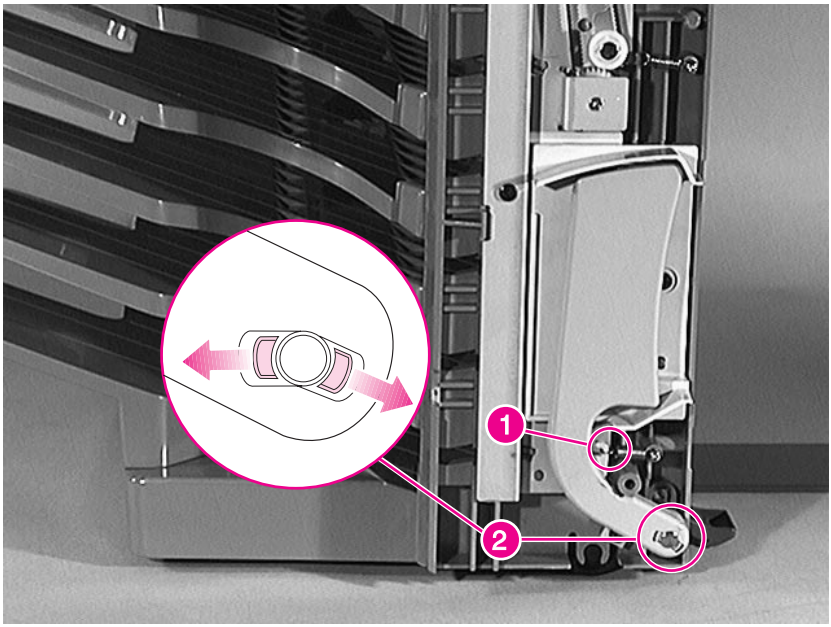

Figure 6-148 **7-bin Tabletop Mailbox Handle**

1 Release the left end of the spring (callout 1).

2 Release the 2 tabs (callout 2), and re the handle out.

To Reinstall:

Be sure the tabs of the handle are properly in place. Push the handle into place until it clicks.

Note The reassembly procedure is the reverse of the disassembly procedure.

Download Service Manual And Resetter Printer at http://printer1.blogspot.com

Latching Mechanism

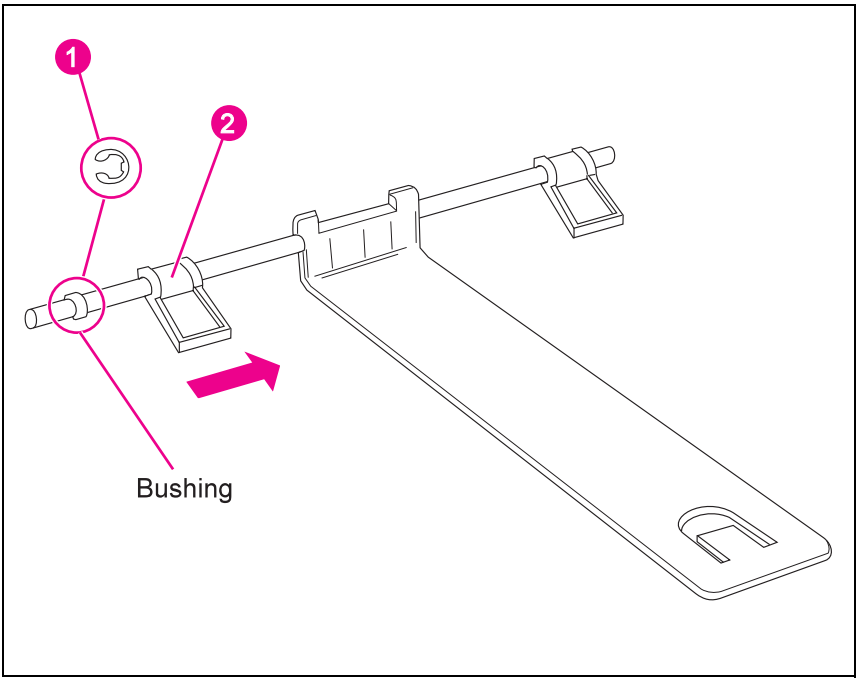

Figure 6-149 **Latching Mechanism**

1. Remove the 7-bin Tabletop Mailbox Handle (page 331).
2. Remove the E-clip in figure 6-149 (callout 1).
3. Move the bushing by sliding it over the shaft, to put it closer to the latching system (callout 2).
4. Slide the Latching Mechanism to the front of the device, and remove it.

To Reinstall:

Note Guide the pin through the hole. First slide the shaft into the hole located at the front bottom of the device.

The tab on the bushing should be on the top during reinstallation.

Download Service Manual And Resetter Printer at http://printer1.blogspot.com

Cover Latch

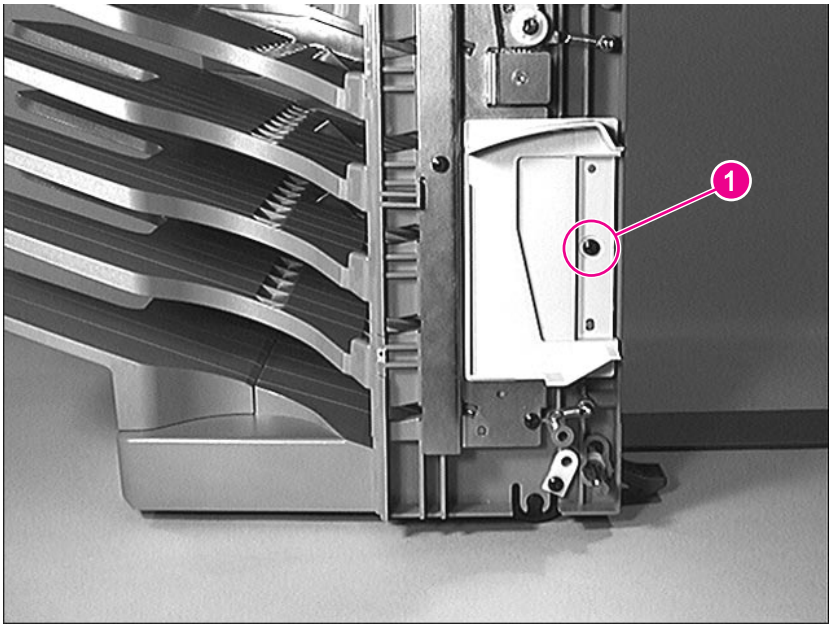

Figure 6-150 **Cover Latch**

1. Remove the 7-bin Tabletop Mailbox Handle (figure 6-148).
2. Remove 1 screw (callout 1), and remove the Cover Latch.

Download Service Manual And Resetter Printer at http://printer1.blogspot.com

8-bin Mailbox Removal and Replacement

WARNING! For the procedures in this section, the printer and all paper-handling devices must be unplugged. Before attempting to service an 8-bin Mailbox, unplug the power cord from the power source; otherwise, severe injury may result.

This printer and paper-handling devices may have sharp edges that could cause injury.

Note Reinstallation is generally the reverse of the removal process. Carefully follow any additional instructions provided under “To Reinstall.”

Orientation - 335

Front and Back Covers - 336

Top Cover - 337

Power Supply - 338

Paper Bins and Blind Cover - - - - - - - - - - - - - - - - - - - 339

Flipper Assembly - 340

Delivery Head Motor - 343

Transport Belt Motor - 344

Input Paper Guide - 346

Metal Tape and Housing Assembly - - - - - - - - - - - - - - - 348

Controller PCA - 350

Anticurl Strings - 352

Delivery Head Assembly - 354

Interlock Switch - 359

Diagnostic LED PCA - 360

User Status LED PCA - 362

Adjustable and Fixed Casters - - - - - - - - - - - - - - - - - 364

Attachment Assembly - 365

Download Service Manual And Resetter Printer at http://printer1.blogspot.com

Orientation

Figure 6-151 shows the orientation of the 8-bin Mailbox as it is referred to in this section.

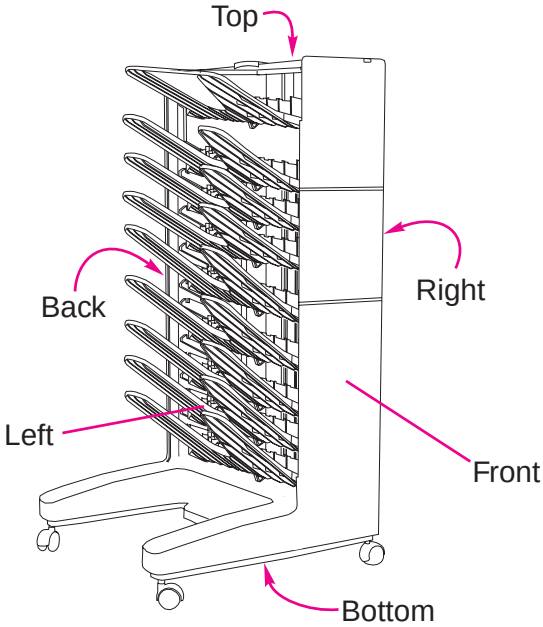

Figure 6-151 **Orientation of the 8-bin Mailbox**

Download Service Manual And Resetter Printer at http://printer1.blogspot.com

Front and Back Covers

Note The procedures for removing the Front and Back Covers are the same. However, before removing the Back Cover, disconnect the Power Supply cable that connects the 8-bin Mailbox Power Supply to the 8-bin Mailbox Controller PCA.

WARNING! Unplug the power cord from the 8-bin Mailbox Power Supply, and then unplug the 8-bin Mailbox Power Supply cable from the 8-bin Mailbox Controller PCA.

1 Remove the 8-bin Mailbox from the printer (page 157).

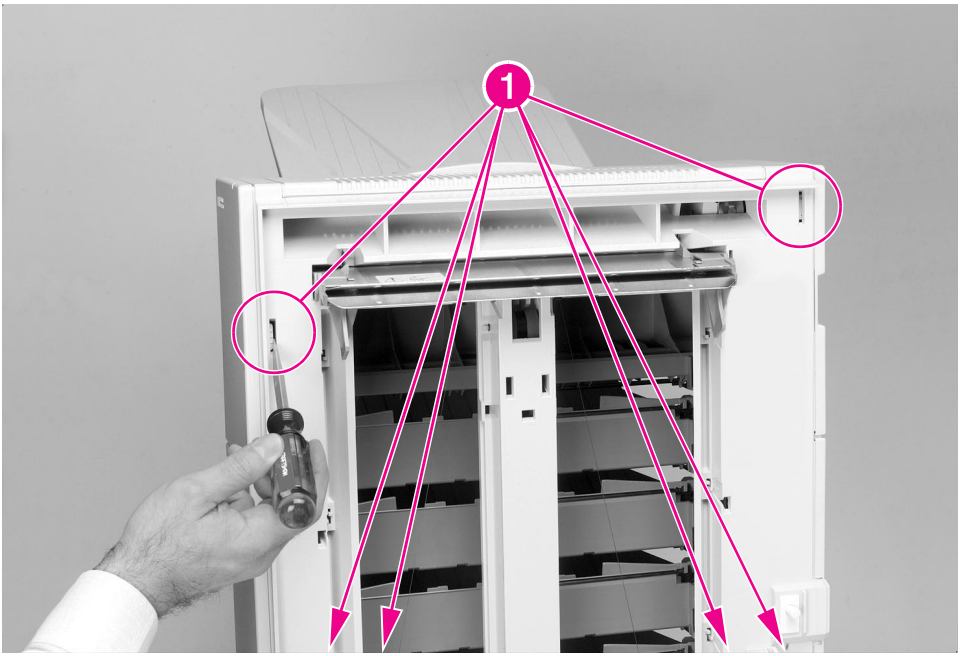

Figure 6-152 **8-bin Mailbox Covers (Front and Back)**

2 For each cover, using a small flat-blade screwdriver, release the 3 retaining tabs that secure the cover to the right side of the 8-bin Mailbox frame (callout 1), and rotate the cover outward to release it from the frame.

To Reinstall:

1 Insert the retaining tabs that secure each cover to the left side of the 8-bin Mailbox frame, and then snap the opposite edge of each cover into position.

Download Service Manual And Resetter Printer at http://printer1.blogspot.com

Top Cover

1 Remove the Front and Back Covers from the 8-bin Mailbox (see Figure 6-152).

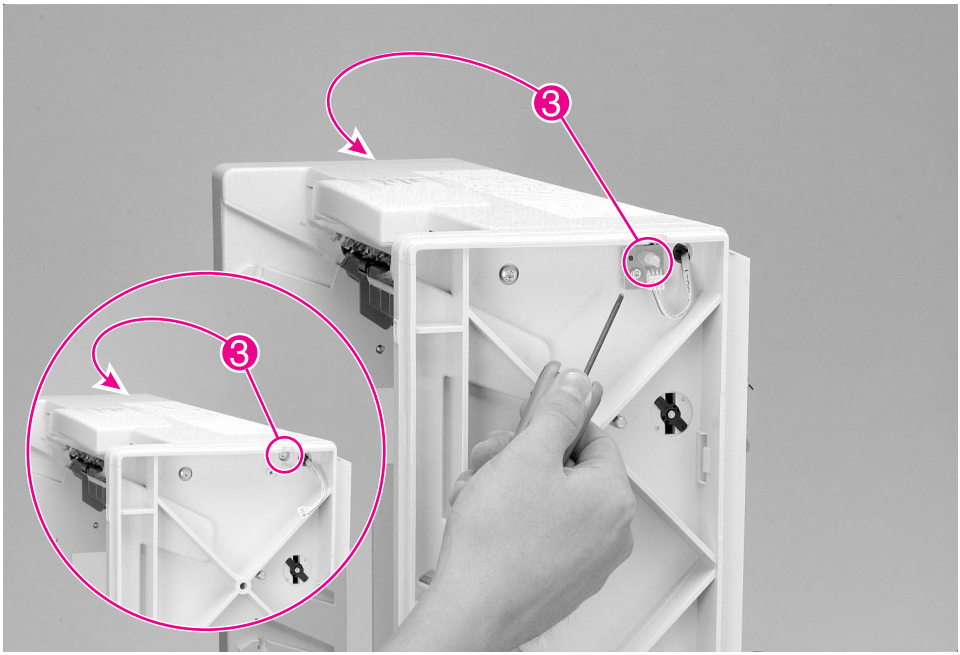

Figure 6-153 **8-bin Mailbox Top Cover**

2 Remove the 2 screws closest to the upper-right side of the 8-bin Mailbox: 1 screw on the front, next to the user LED, and the other at the back side of the 8-bin Mailbox frame (callout 3).

3 Slide the Top Cover to the left side of the device, and lift it up.See table 6-151 on page 335.

Download Service Manual And Resetter Printer at http://printer1.blogspot.com

Power Supply

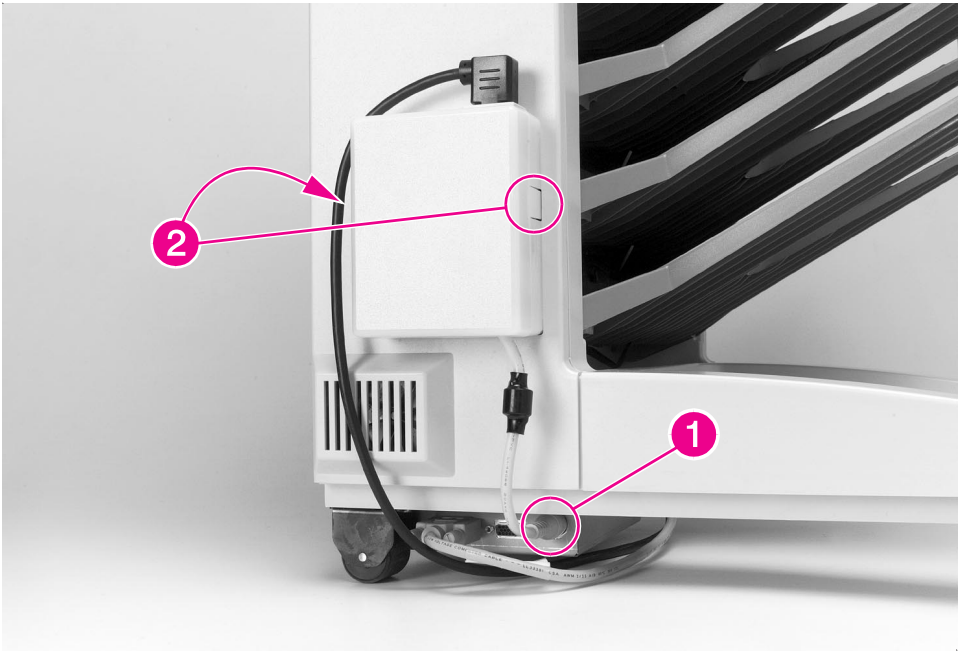

Figure 6-154 **8-bin Mailbox Power Supply**

1. Locate the cable that runs from the 8-bin Mailbox Power Supply down to the 8-bin Mailbox Controller PCA, and disconnect the cable from the Controller PCA (Figure 6-154, callout 1).
2. Remove the Power Supply from the Back Cover of the 8-bin Mailbox by pressing the plastic retaining tabs that are on each side of the Power Supply (callout 2).

To Reinstall:

1. Align the Power Supply with the mounting holes that are on the Back Cover so that the retaining tabs on the Power Supply (callout 2) fit into their respective slots.
2. Reconnect the Power Supply Cable to the 8-bin Mailbox Controller PCA (callout 1).

Download Service Manual And Resetter Printer at http://printer1.blogspot.com

Paper Bins and Blind Cover

The procedure for removing a paper bin and the Blind Cover is the same. Each bin rests in its labeled slot.

Figure 6-155 **8-bin Mailbox Paper Bins and Blind Cover**

1. Remove the Face-up Bin first. Lift up on the outer edge of the bin to clear the retaining notch in the frame, and then pull the bin away from the 8-bin Mailbox frame (callout 1).
2. Remove the Blind Cover.
3. Remove each Face-down Bin, starting at the top and working down in sequence.

To Reinstall:

1. Slide a bin into its designated slot, and then lower the bin into the retaining notch in the frame.
2. Replace the paper bins, beginning with the bottom Face-down Bin and continuing upward in order.
3. Place the Blind Cover between Face-down Bin 1 and the Face-up Bin.

Download Service Manual And Resetter Printer at http://printer1.blogspot.com

Flipper Assembly

1 Remove all the paper bins and the Blind Cover from the 8-bin Mailbox (see Figure 6-155).

2 Remove the Front, Back, and Top Covers from the 8-bin Mailbox (see Figure 6-152 and Figure 6-153).

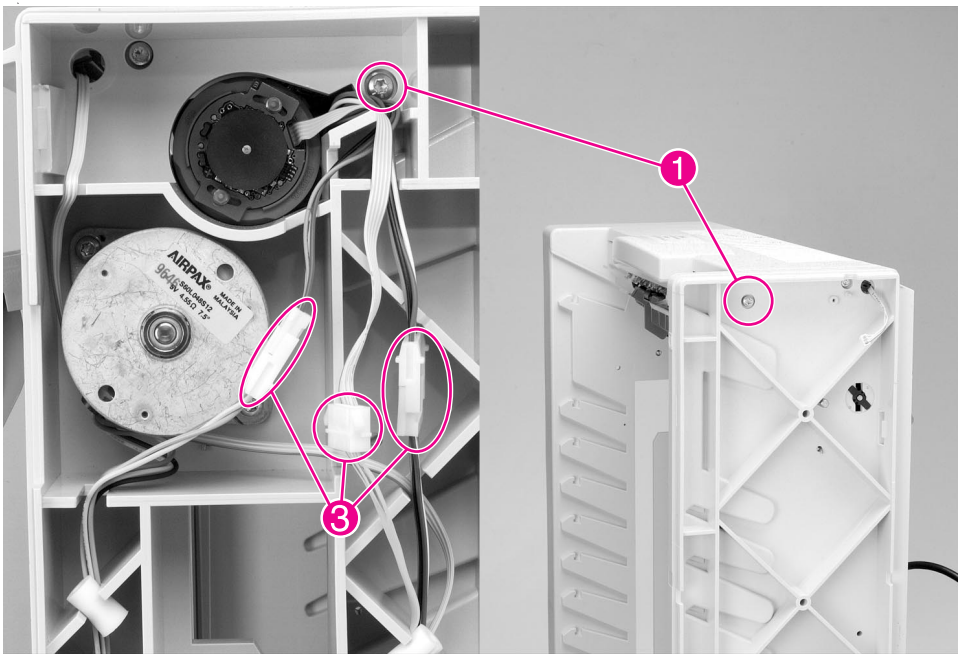

Figure 6-156 **8-bin Mailbox Flipper Assembly (1 of 3)**

3 Remove the 2 screws closest to the upper-left side of the 8-bin Mailbox: 1 screw on the front and back sides of the 8-bin Mailbox frame (Figure 6-156, callout 1).

Download Service Manual And Resetter Printer at http://printer1.blogspot.com

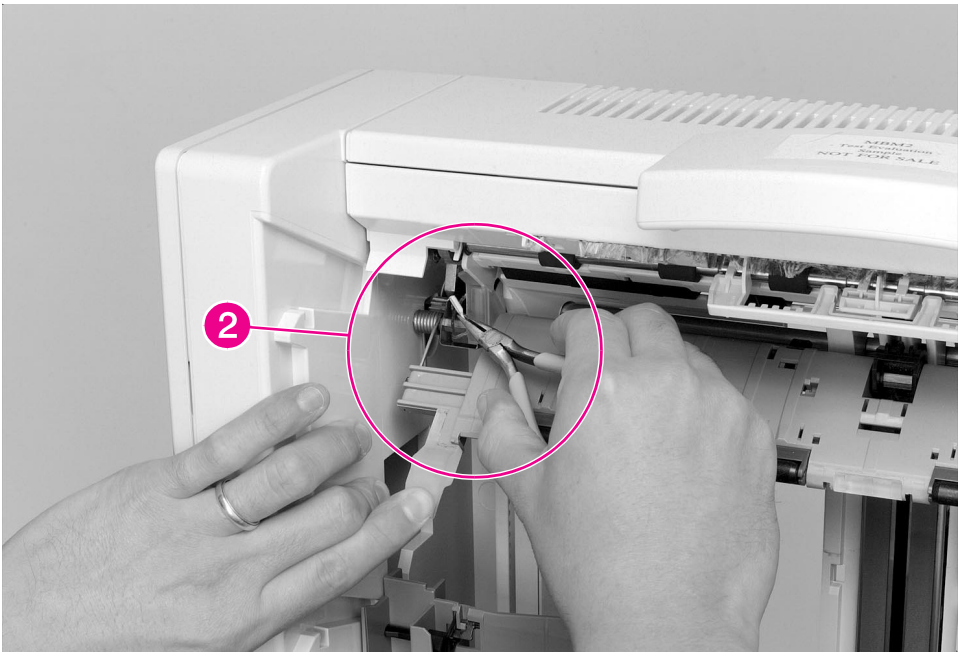

Figure 6-157 **8-bin Mailbox Flipper Assembly (2 of 3)**

4 Hold down the Jam Access Door while unplugging the ground wire that runs from the Input Paper Guide to the Flipper Motor (Figure 6-157, callout 2).

5 Unplug the Flipper Assembly's 3 cables from the connectors that are located on the 8-bin Mailbox unit's back side (Figure 6-156, callout 3).

6 Using a flat-blade screwdriver, release the plastic retaining tab that secures the Flipper Assembly to the top of the 8-bin Mailbox frame (Figure 6-158, callout 4).

Download Service Manual And Resetter Printer at http://printer1.blogspot.com

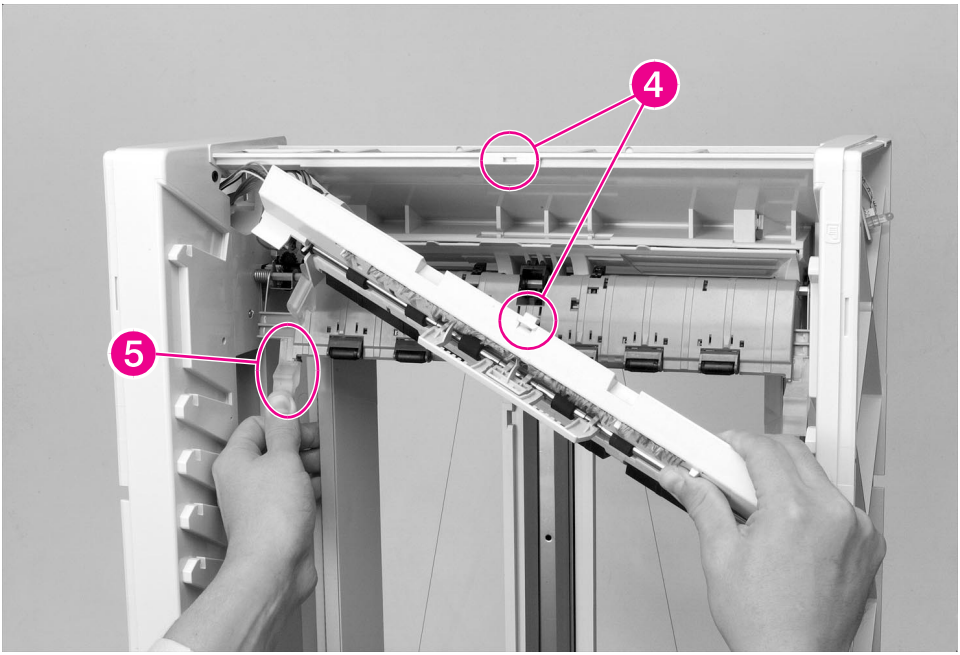

Figure 6-158 **8-bin Mailbox Flipper Assembly (3 of 3)**

7 Hold down the Jam Access Door, and pull out the Flipper Assembly (Figure 6-158, callout 5).

To Reinstall:

1 Hold down the Jam Access Door to reconnect the ground wire to the Flipper Motor (Figure 6-157, callout 2).

2 Route the Flipper Assembly's 3 cables through the back side of the 8-bin Mailbox frame and reconnect the 3 cables to the connectors (Figure 6-156, callout 3).

CAUTION Do not over-tighten the screws that secure the Flipper Assembly to the 8-bin Mailbox frame. The nuts in the Flipper Assembly could rotate in their slots.

Download Service Manual And Resetter Printer at http://printer1.blogspot.com

Delivery Head Motor

1 Remove the Back Cover from the 8-bin Mailbox (see Figure 6-152).

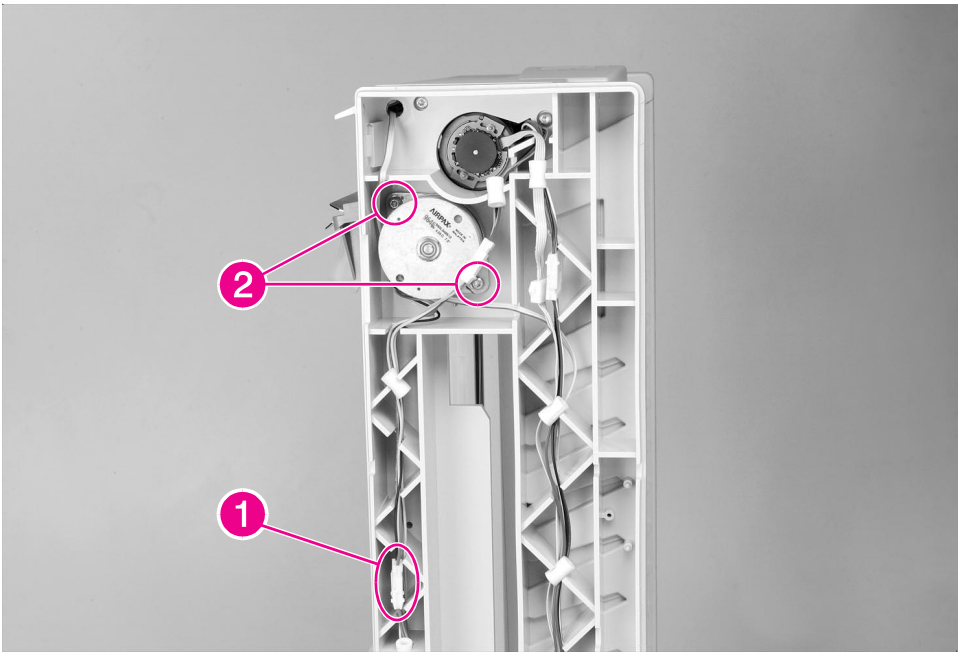

Figure 6-159 **8-bin Mailbox Delivery Head Motor**

2 Locate the cable that runs from the Delivery Head Motor down to the 8-bin Mailbox Controller PCA, and disconnect the cable from the connector in the middle of the 8-bin Mailbox frame (Figure 6-159, callout 1).

3 Remove the 2 screws that secure the Delivery Head Motor to the 8-bin Mailbox frame (callout 2).

4 Pull the Delivery Head Motor away from the 8-bin Mailbox frame.

To Reinstall:

1 Position the motor in the 8-bin Mailbox frame so that the cable grommets face down.

2 Reconnect the motor's cable to the connector in the middle of the frame (callout 1).

Download Service Manual And Resetter Printer at http://printer1.blogspot.com

Transport Belt Motor

1. Remove the Back Cover from the 8-bin Mailbox (see Figure 6-152).
2. Remove all the paper bins and the Blind Cover from the 8-bin Mailbox (see Figure 6-155).
3. Release the Controller PCA Assembly from the bottom of the 8-bin Mailbox frame (see figure 6-165 on page 350, steps 1 through 7).

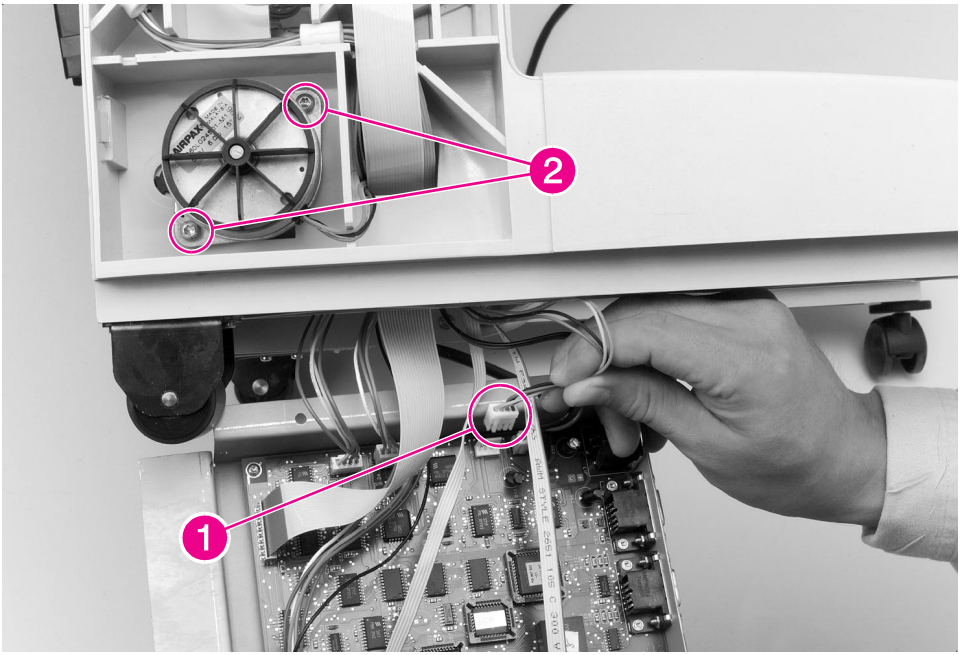

Figure 6-160 **8-bin Mailbox Transport Belt Motor**

4. Locate the cable that runs from the Transport Belt Motor to the 8-bin Mailbox Controller PCA, and disconnect the cable from the J8 connector on the Controller PCA (Figure 6-160, callout 1).
5. Remove the 2 screws (and washers) that secure the Transport Belt Motor to the 8-bin Mailbox frame (Figure 6-160, callout 2).

CAUTION When pulling out the motor, be careful to not damage the internal drive belt.

6. Gently pull out the motor.

Download Service Manual And Resetter Printer at http://printer1.blogspot.com

To Reinstall:

1. Reroute the cable on the Transport Belt Motor behind the flat cable, and connect it to the J8 connector on the 8-bin Mailbox Controller PCA (callout 1).
2. Reinstall the 8-bin Mailbox Controller PCA Assembly (see Figure 6-165).
3. Replace the internal drive belt onto the Transport Belt Motor's gear before replacing and tightening the screws that secure the motor to the frame.

Download Service Manual And Resetter Printer at http://printer1.blogspot.com

Input Paper Guide

1 Remove the 8-bin Mailbox from the printer.

2 Remove the Face-up Bin and the Blind Cover from the 8-bin Mailbox (see Figure 6-155).

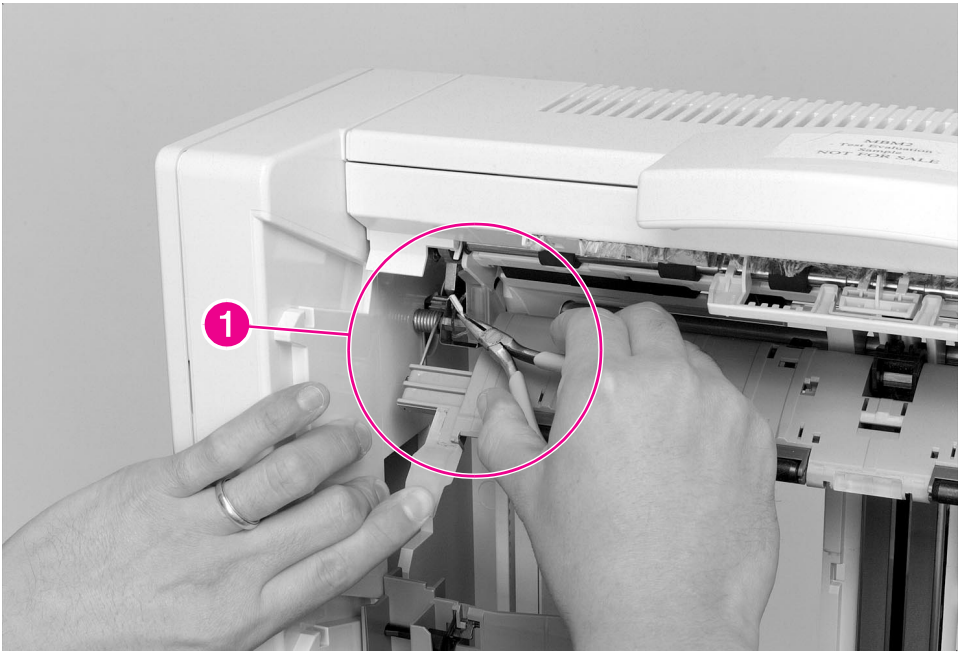

Figure 6-161 **8-bin Mailbox Input Paper Guide (1 of 2)**

Download Service Manual And Resetter Printer at http://printer1.blogspot.com

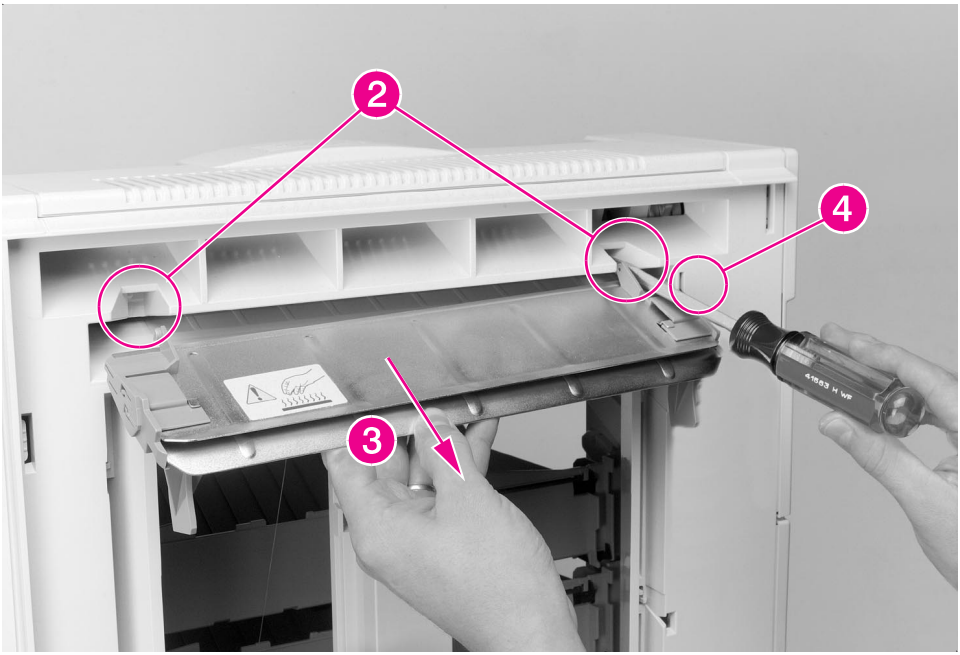

Figure 6-162 **8-bin Mailbox Input Paper Guide (2 of 2)**

3 Hold down the Jam Access Door while unplugging the ground wire that runs from the Input Paper Guide to the Flipper Motor (Figure 6-161, callout 1).

4 Use a flat-blade screwdriver to release the retaining tabs that secure the Input Paper Guide to the upper-right side of the 8-bin Mailbox (Figure 6-162, callout 2).

5 Pull the Input Paper Guide free of the frame (callout 3) while routing the ground wire that connects to the end of the paper guide through the wire's access hole (callout 4).

To Reinstall:

1 Reroute the ground wire through its access hole (Figure 6-162, callout 4).

2 Reconnect the ground wire to the Flipper Motor (Figure 6-161, callout 1).

3 Replace the Face-up Bin and the Blind Cover (see Figure 6-155).

Download Service Manual And Resetter Printer at http://printer1.blogspot.com

Metal Tape and Housing Assembly

1 Remove all the paper bins and the Blind Cover from the 8-bin Mailbox (see Figure 6-155).

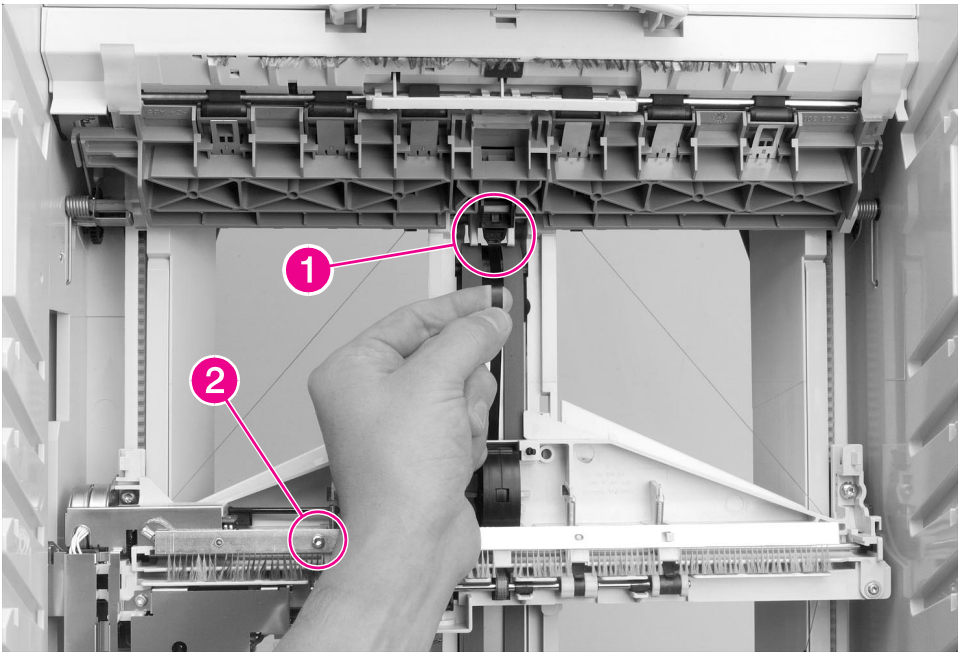

Figure 6-163 **8-bin Mailbox Metal Tape and Housing Assembly (1 of 2)**

WARNING! The Metal Tape's sharp edges can cause serious injury. When rewinding the Metal Tape into its housing, hold the tape securely and rewind it slowly.

2 With the Delivery Head Assembly at the top of the 8-bin Mailbox, hold the Metal Tape near the end, and push and release the retainer tab that secures the end of the tape to the top of the 8-bin Mailbox frame (Figure 6-163, callout 1). Then let the tape slowly rewind into its housing.

3 Remove the 1 screw that secures the Static Brush to the Delivery Head Assembly (callout 2), and then move the Static Brush out of the way.

4 Lower the Delivery Head Assembly halfway to the stops.

Download Service Manual And Resetter Printer at http://printer1.blogspot.com

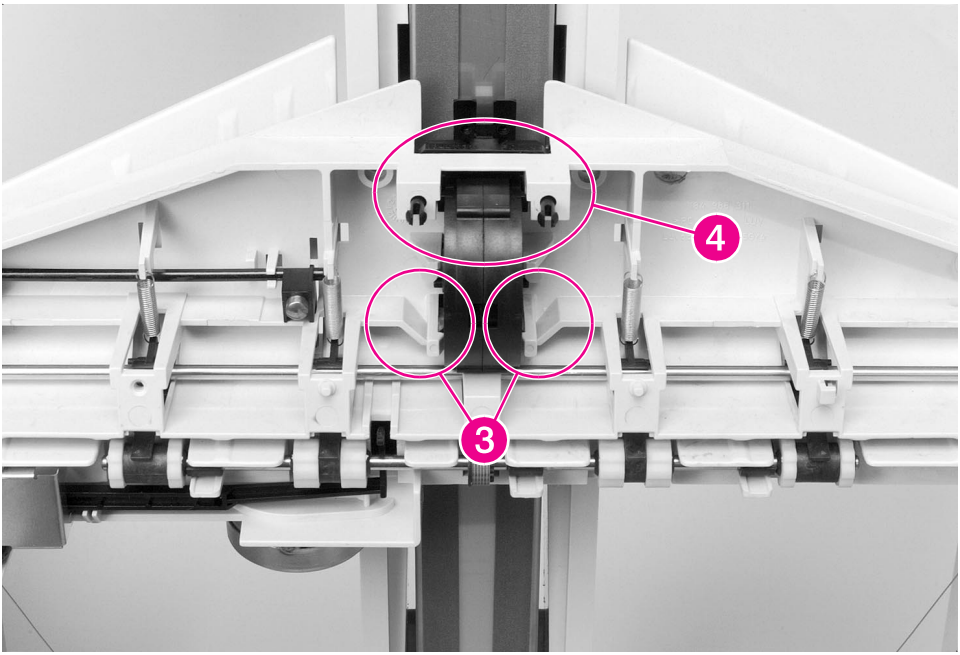

Figure 6-164 **8-bin Mailbox Metal Tape and Housing Assembly (2 of 2)**

5 Using a flat-blade screwdriver, release the plastic retaining tabs located on each side of the tape housing (Figure 6-164, callout 3).

6 Gently pull on the Delivery Head Assembly to remove the end of the tape from behind the rollers that hold the tape in its track (callout 4). Then pull the tape housing toward you to remove it.

To Reinstall:

1 Thread the end of the Metal Tape behind the rollers (callout 4), and then pull the end of the tape to the top of the 8-bin Mailbox and reinsert it into place (Figure 6-163, callout 1).

2 Use the guide pins to reinstall the tape housing (Figure 6-164, callout 3). When the housing is correctly positioned, it will click into place.

3 Reinstall the static brush (Figure 6-163, callout 1).

Download Service Manual And Resetter Printer at http://printer1.blogspot.com

Controller PCA

1 Remove the 8-bin Mailbox from the printer.

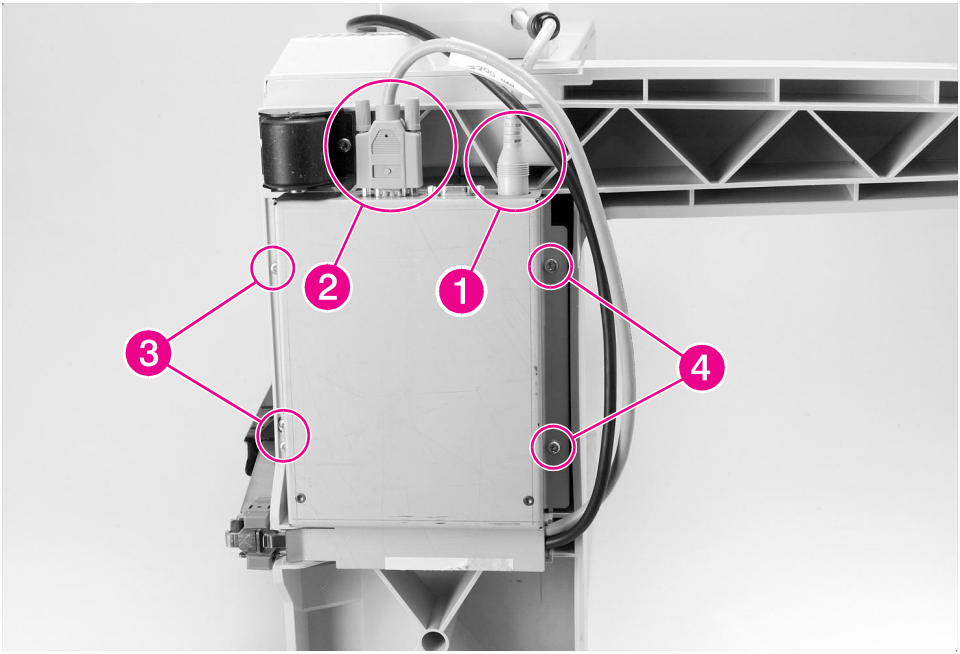

Figure 6-165 **8-bin Mailbox Controller PCA (1 of 2)**

2 Locate the power cable that runs from the 8-bin Mailbox Power Supply down to the 8-bin Mailbox Controller PCA, and disconnect the cable from the Controller PCA (Figure 6-165, callout 1).

3 Disconnect the C-link cable from the 8-bin Mailbox Controller PCA (callout 2).

4 Remove all paper bins and the Blind Cover from the 8-bin Mailbox (see Figure 6-155).

5 Carefully lay the 8-bin Mailbox onto its front side.

6 Loosen the 1 grounding screw and the 2 self-tapping screws that secure the Controller PCA to the bottom-right side of the 8-bin Mailbox frame (callout 3).

7 Remove the 2 self-tapping screws that secure the Controller PCA to the bottom-left side of the 8-bin Mailbox frame (callout 4). One of the screws is connected to a grounding cable.

8 Open the metal box to reveal the Controller PCA.

Download Service Manual And Resetter Printer at http://printer1.blogspot.com

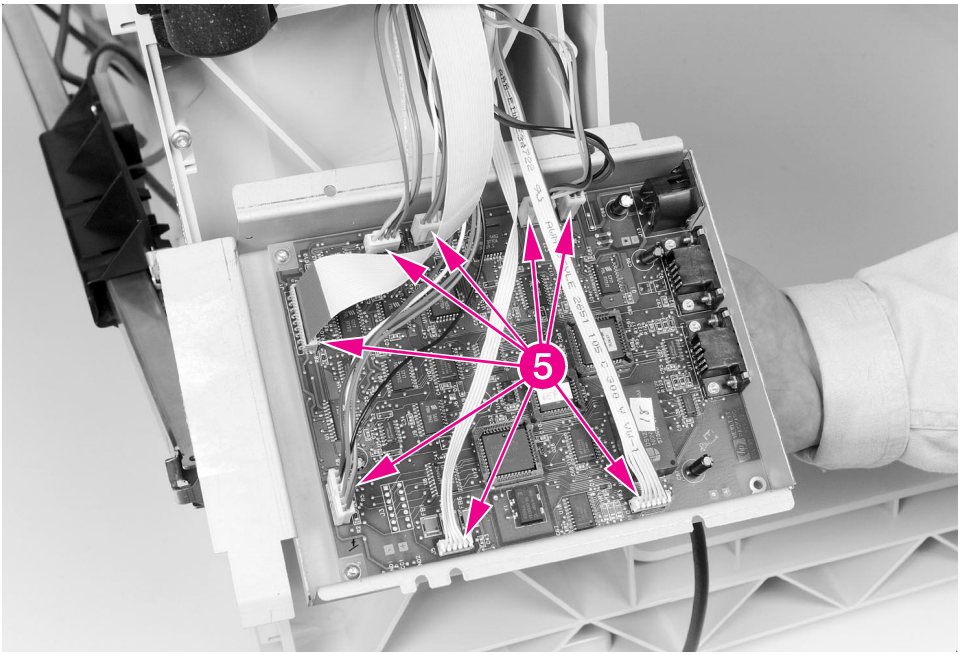

Figure 6-166 **8-bin Mailbox Controller PCA (2 of 2)**

9 Disconnect the 8 cables from the Controller PCA (Figure 6-166, callout 5).

To Reinstall:

1 Reconnect the 8 cables to the connectors on the 8-bin Mailbox Controller PCA (callout 5).

2 Be sure to reinstall the grounding cable beneath its corresponding screw.

Download Service Manual And Resetter Printer at http://printer1.blogspot.com

Anticurl Strings

1 Remove the Back Cover, all the paper bins, and the Blind Cover from the 8-bin Mailbox (see Figure 6-152 and Figure 6-155).

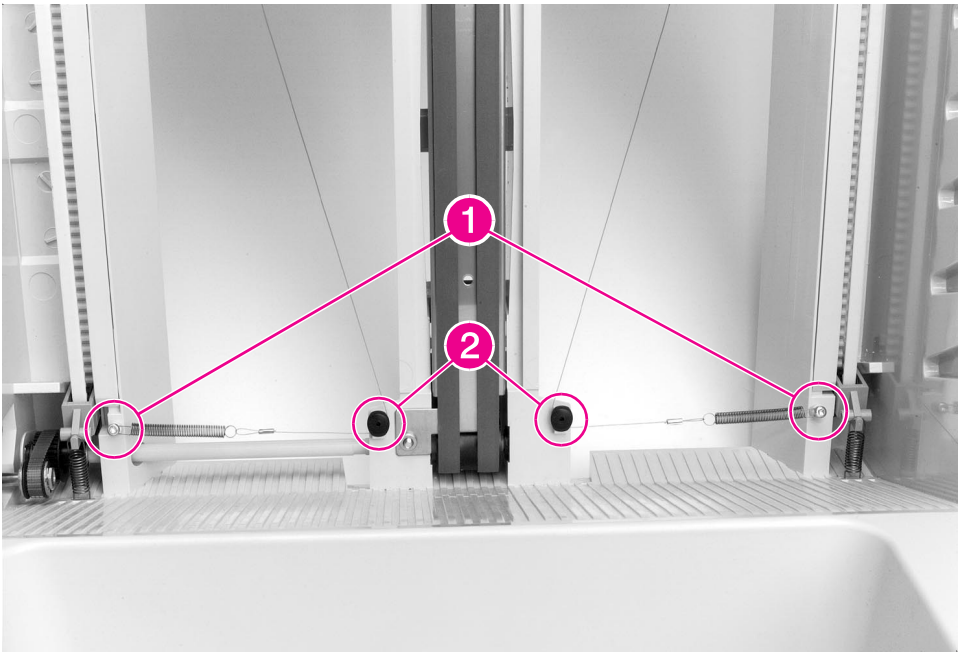

Figure 6-167 **8-bin Mailbox Anticurl Strings (1 of 2)**

2 At the lower-left side of the 8-bin Mailbox frame, locate the Tension Springs on the Anticurl Strings, and remove the 2 screws that secure the springs to the frame (Figure 6-167, callout 1).

3 Remove the Anticurl Strings from the lower pulleys (callout 2).

4 Remove the Delivery Head Assembly from the 8-bin Mailbox frame (see Figure 6-169).

Download Service Manual And Resetter Printer at http://printer1.blogspot.com

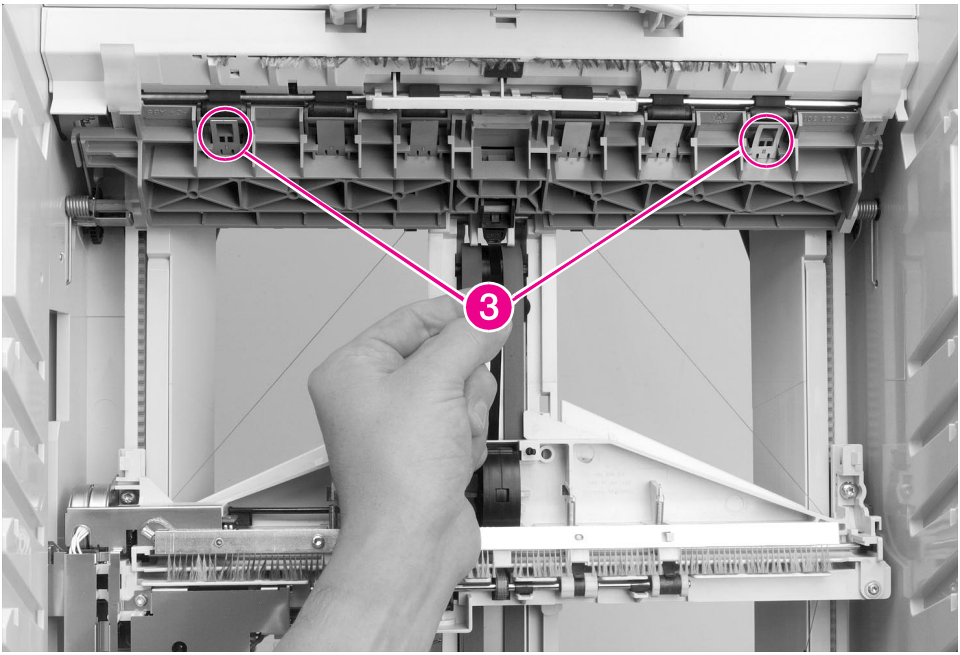

Figure 6-168 **8-bin Mailbox Anticurl Strings (2 of 2)**

5 Release the upper ends of the Anticurl Strings from the Jam Access Door by pushing the retaining tabs that secure the strings to the Jam Access Door (Figure 6-168, callout 3).

To Reinstall:

1 Reverse the procedure given above.

Download Service Manual And Resetter Printer at http://printer1.blogspot.com

Delivery Head Assembly

1 Remove the Back Cover from the 8-bin Mailbox (see Figure 6-152).

2 Remove all the paper bins and the Blind Cover from the 8-bin Mailbox (see Figure 6-155).

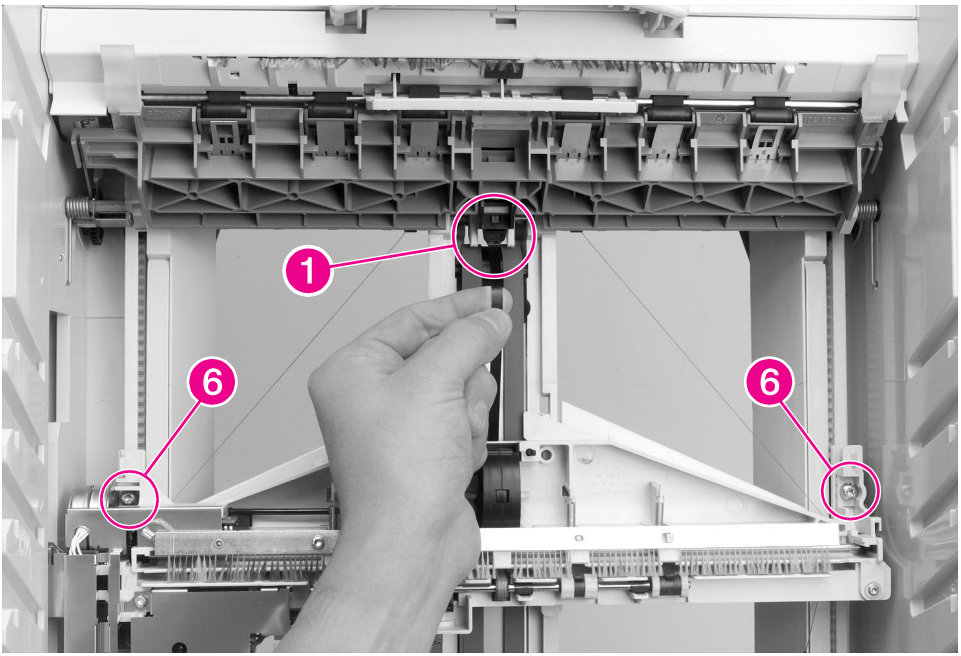

Figure 6-169 **8-bin Mailbox Delivery Head Assembly (1 of 4)**

WARNING! The Metal Tape's sharp edges can cause serious injury. When rewinding the Metal Tape into its housing, hold the tape securely and rewind it slowly.

3 With the Delivery Head Assembly at the top of the 8-bin Mailbox, hold the Metal Tape near the end, and release the retainer tab that secures the end of the tape to the top of the 8-bin Mailbox frame (Figure 6-169, callout 1). Then let the tape slowly rewind into its housing.

Download Service Manual And Resetter Printer at http://printer1.blogspot.com

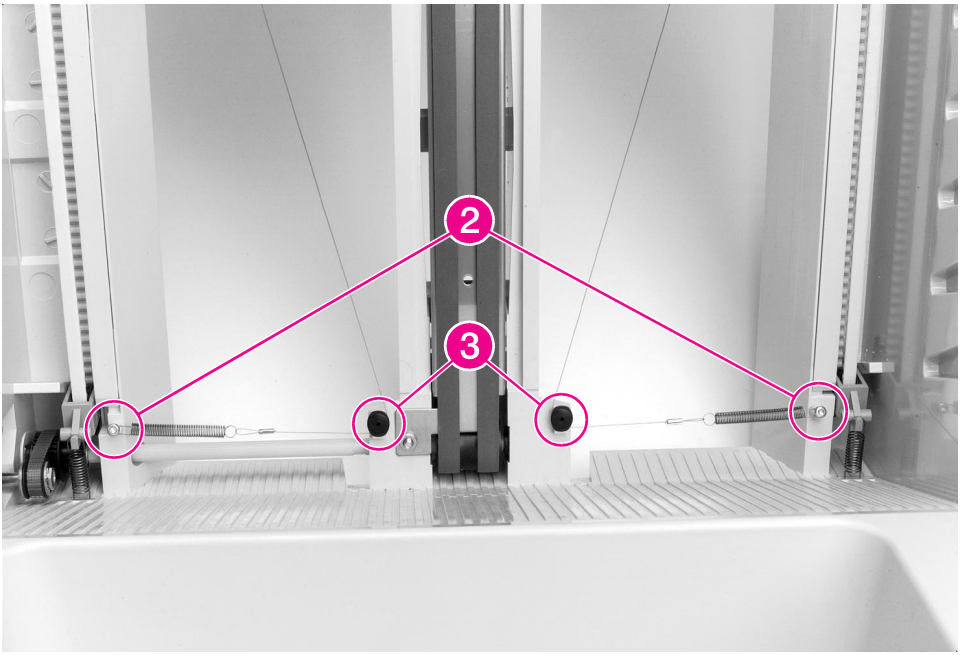

Figure 6-170 **8-bin Mailbox Delivery Head Assembly (2 of 4)**

4 At the lower-left side of the 8-bin Mailbox frame, locate the Tension Springs on the Anticurl Strings, and remove the 2 screws that secure the springs to the frame (Figure 6-170, callout 2).

5 Remove the Anticurl Strings from the lower pulleys (callout 3).

Download Service Manual And Resetter Printer at http://printer1.blogspot.com

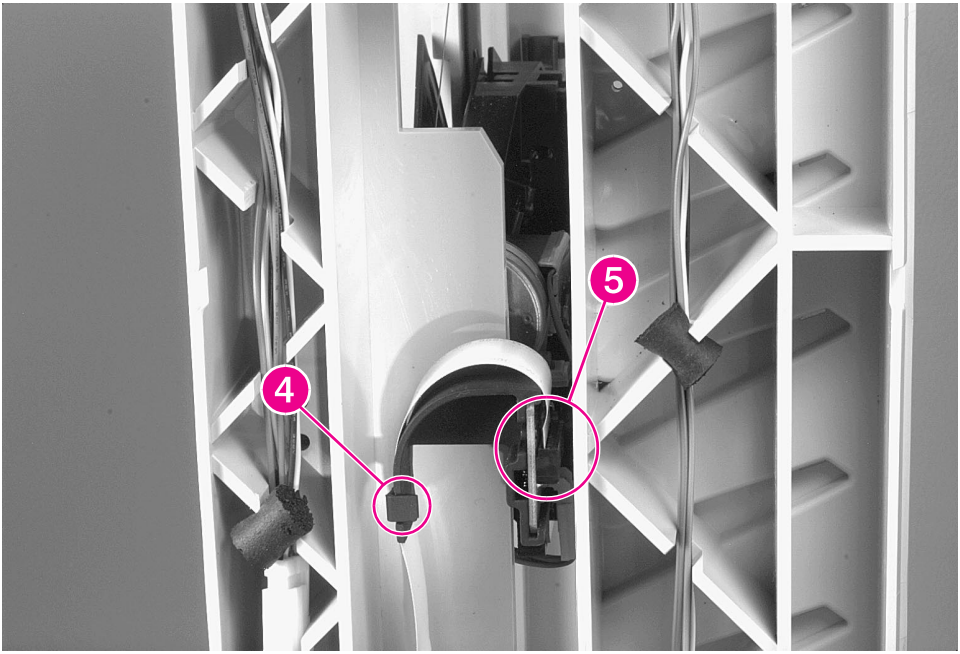

Figure 6-171 **8-bin Mailbox Delivery Head Assembly (3 of 4)**

6 On the back side of the 8-bin Mailbox, release the flat ribbon cable from the cable clip that secures the cable to the 8-bin Mailbox frame (Figure 6-171, callout 4), and gently disconnect the flat ribbon cable from the Delivery Head Assembly (callout 5).

7 Raise the Delivery Head Assembly to the top of the 8-bin Mailbox frame.

8 Hold up the Delivery Head Assembly, and remove the 2 screws that secure it to the elevator mounts: 1 screw on each end of the assembly (Figure 6-169, callout 6). The screw that secures the back end is captive.

Download Service Manual And Resetter Printer at http://printer1.blogspot.com

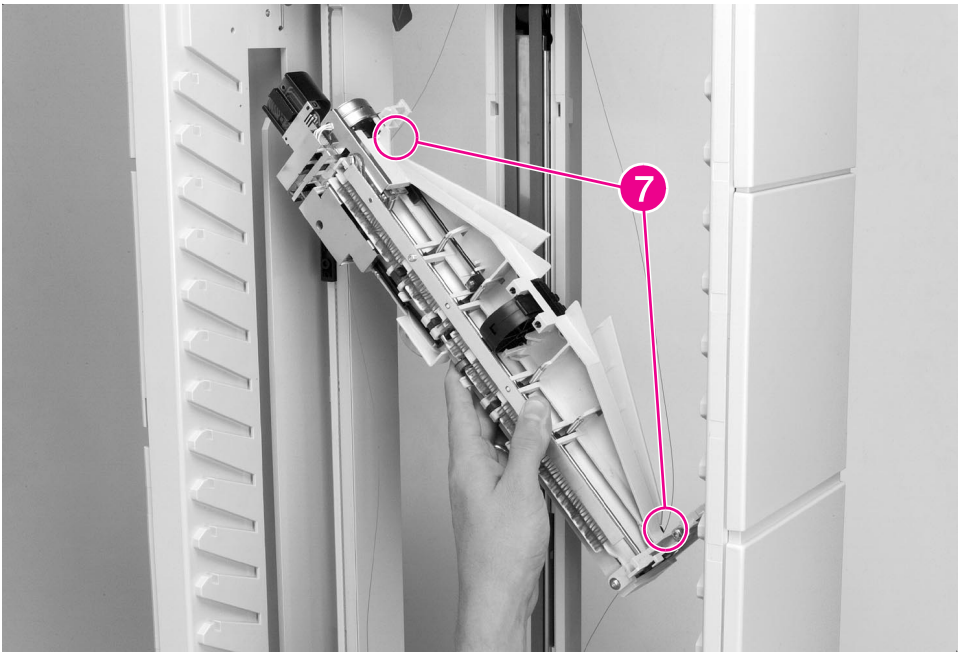

Figure 6-172 **8-bin Mailbox Delivery Head Assembly (4 of 4)**

9 Rotate the Delivery Head Assembly clockwise while guiding the back end out of its access opening (see 6-172).

10 Release the Anticurl Strings from the pulleys on each end of the Delivery Head Assembly (Figure 6-172, callout 7).

Download Service Manual And Resetter Printer at http://printer1.blogspot.com

To Reinstall:

1. Replace the Anticurl Strings into the pulleys on the ends of the Delivery Head Assembly.
2. Reinstall the Delivery Head Assembly onto its elevator mounts and secure it with the screws. Make sure that the locating pins are in place.
3. Replace the Tension Springs on the Anticurl Strings at the bottom of the frame with the T-10 Torx screws (Figure 6-170, callout 2).
4. Snap the Anticurl Strings into the pulleys at the bottom of the frame (Figure 6-170, callout 3).
5. Reconnect the flat ribbon cable to the Delivery Head Assembly, and secure the cable to the frame with the cable clip (Figure 6-171, callouts 4 and 5).
6. Make sure that the Delivery Head Assembly moves up and down freely.

Download Service Manual And Resetter Printer at http://printer1.blogspot.com

Interlock Switch

1 Remove the Back Cover from the 8-bin Mailbox (see Figure 6-152).

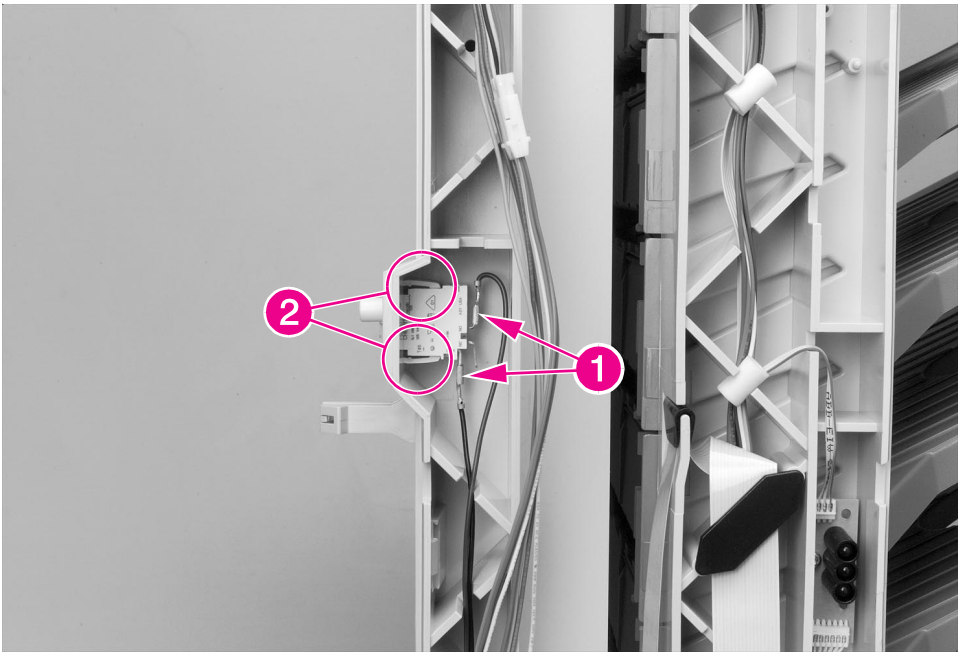

Figure 6-173 **8-bin Mailbox Interlock Switch**

CAUTION Before removing the wires from the 8-bin Mailbox Interlock Switch, note the location of each wire. Replacing the wires incorrectly can damage the Interlock Switch.

2 Inside the back side of the 8-bin Mailbox frame, disconnect the 2 wires from the Interlock Switch (Figure 6-173, callout 1).

3 Remove the Interlock Switch by pressing together the 2 retaining tabs that hold the switch in place (callout 2).

To Reinstall:

1 Reconnect the wires in the correct positions (callout 1).

Download Service Manual And Resetter Printer at http://printer1.blogspot.com

Diagnostic LED PCA

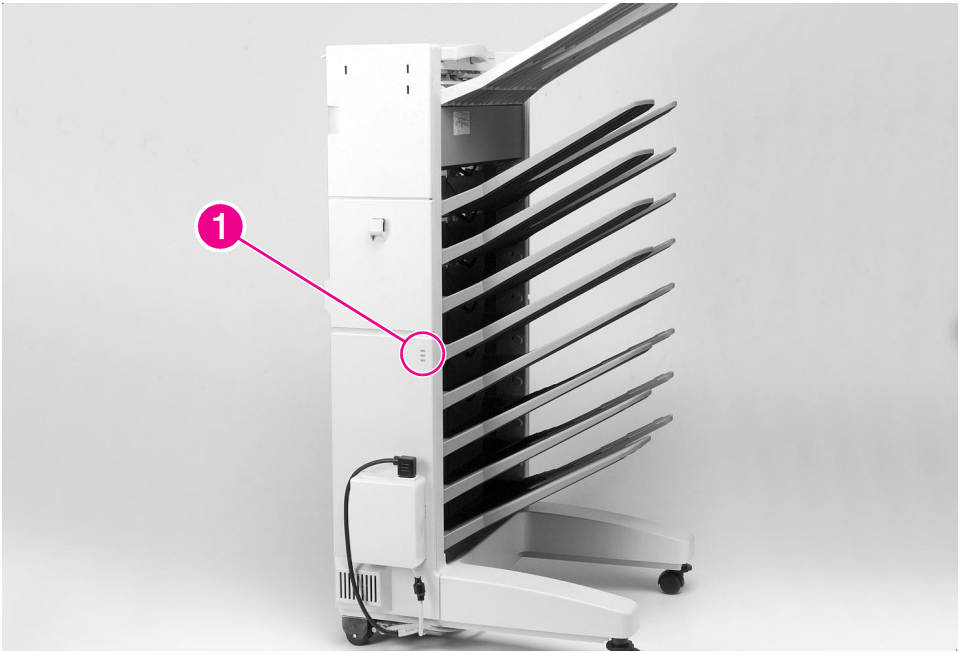

Figure 6-174 **8-bin Mailbox Diagnostic LED PCA (1 of 2)**

1. Locate the Diagnostic LED that is on the back side of the 8-bin Mailbox (Figure 6-174, callout 1).
2. Remove the Back Cover from the 8-bin Mailbox (see Figure 6-152).

Download Service Manual And Resetter Printer at http://printer1.blogspot.com

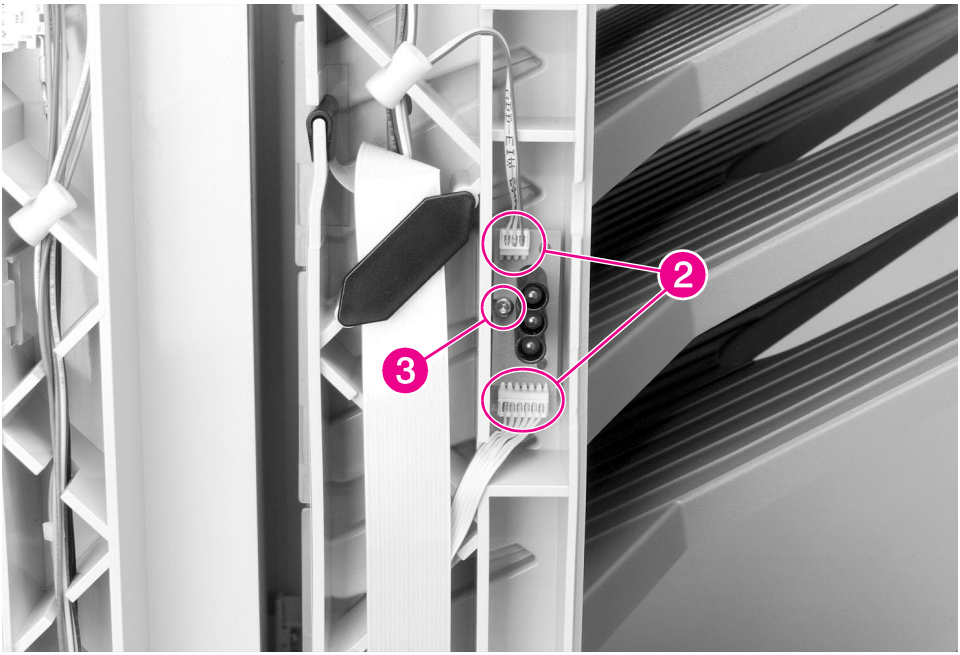

Figure 6-175 **8-bin Mailbox Diagnostic LED PCA (2 of 2)**

3 Disconnect the 2 flat cables from the Diagnostic LED PCA (Figure 6-175, callout 2).

4 Remove the 1 screw that secures the Diagnostic LED PCA to the 8-bin Mailbox frame (callout 3).

5 Pull the Diagnostic LED PCA away from the 8-bin Mailbox frame.

Download Service Manual And Resetter Printer at http://printer1.blogspot.com

User Status LED PCA

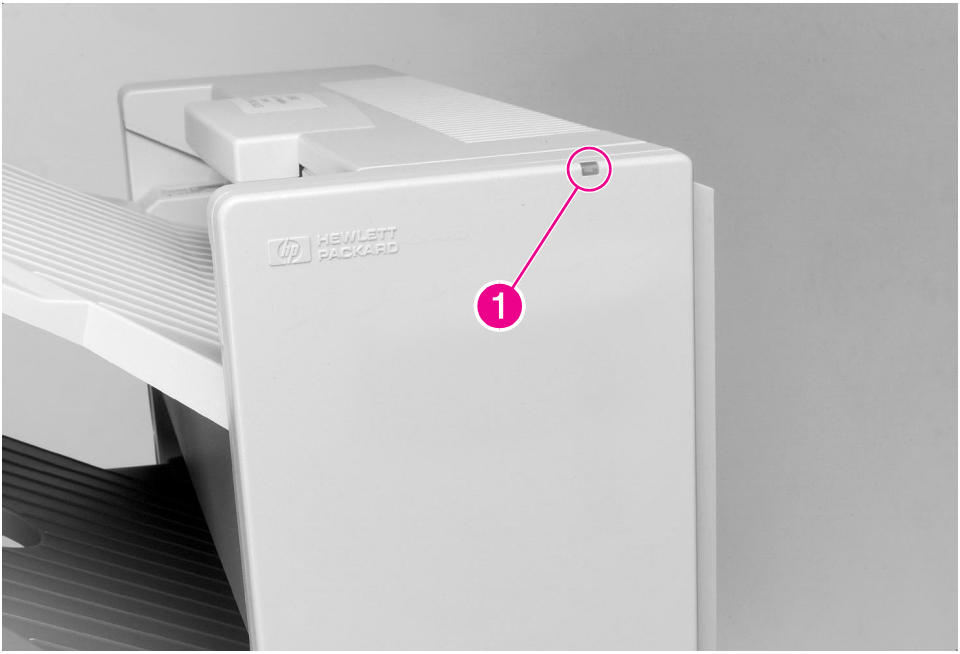

Figure 6-176 **8-bin Mailbox User Status LED PCA (1 of 2)**

1. Locate the User Status LED PCA that is on the upper-front side of the 8-bin Mailbox (Figure 6-176, callout 1).
2. Remove the Front Cover from the 8-bin Mailbox (see Figure 6-152).

Download Service Manual And Resetter Printer at http://printer1.blogspot.com

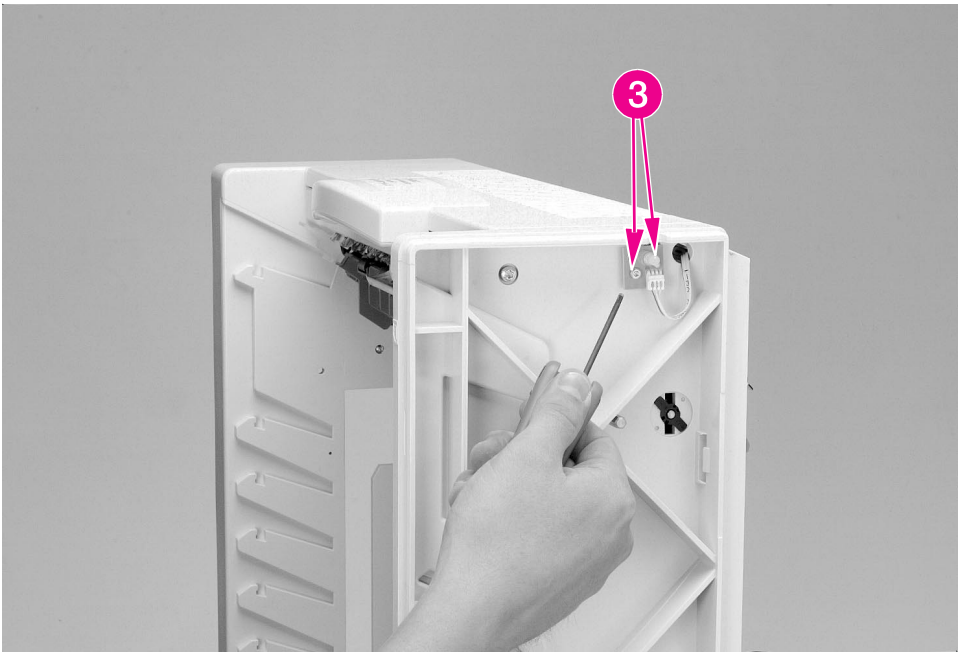

Figure 6-177 **8-bin Mailbox User Status LED PCA (2 of 2)**

3 Disconnect the cable from the User Status LED PCA (Figure 6-177, callout 2).

4 Pull the LED PCA away from its frame.

5 Remove the 1 screw that secures the LED PCA frame to the 8-bin Mailbox frame (callout 3).

Download Service Manual And Resetter Printer at http://printer1.blogspot.com

Adjustable and Fixed Casters

Note The procedures for removing the Adjustable and Fixed Casters are the same.

1. Remove the 8-bin Mailbox from the printer.
2. Carefully lay the 8-bin Mailbox onto its front side.

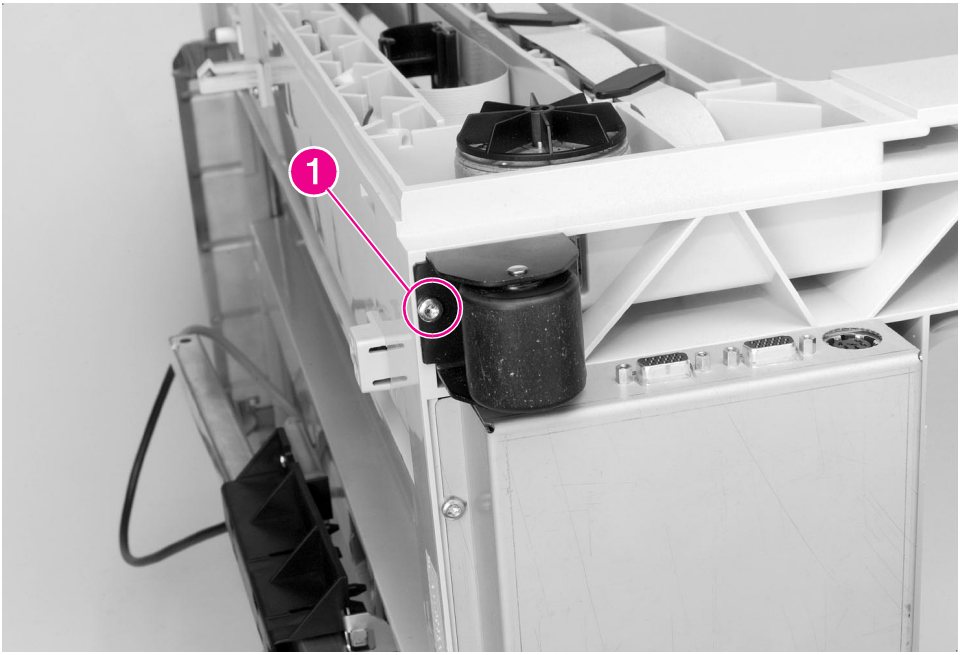

Figure 6-178 **8-bin Mailbox Adjustable and Fixed Casters**

3. Remove the 1 screw that secures the caster to the 8-bin Mailbox frame (Figure 6-178, callout 1).
4. Remove the Caster.

Download Service Manual And Resetter Printer at http://printer1.blogspot.com

Attachment Assembly

1. Disconnect the power cable and the C-link cable from the 8-bin Mailbox Controller PCA (see Figure 6-165, callouts 1 and 2).
2. Release the Controller PCA from the 8-bin Mailbox frame, but leave the wire cables connected to the Controller PCA (see Figure 6-166).

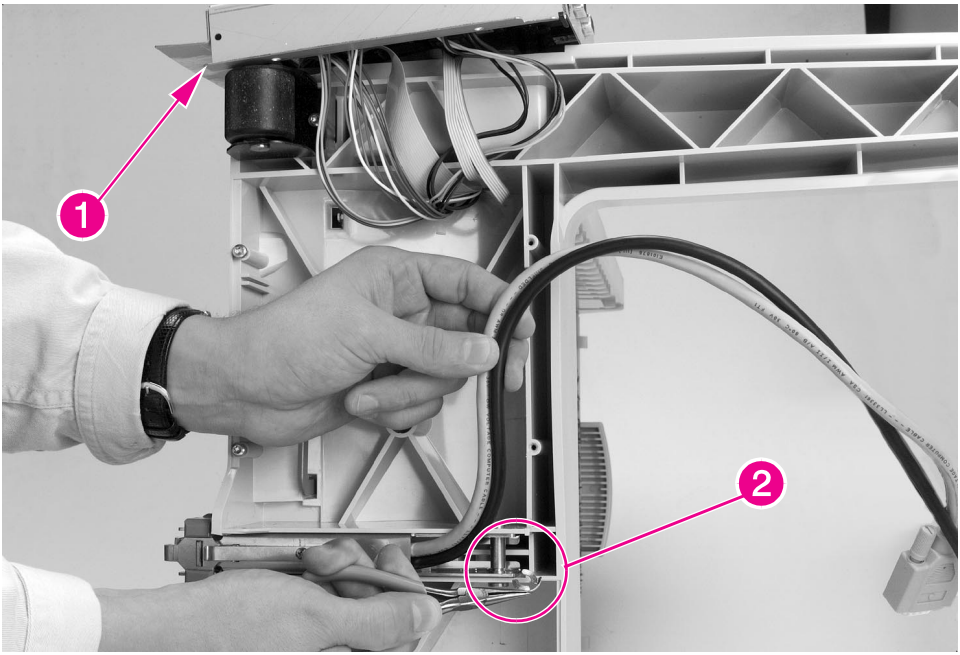

Figure 6-179 **8-bin Mailbox Attachment Assembly**

3. Set the Controller PCA on top of the 8-bin Mailbox unit (Figure 6-179, callout 1).
4. Remove the E-clip (callout 2).
5. Release the pivot pin that holds the Attachment Assembly's rod to the 8-bin Mailbox frame.
6. Remove the attachment assembly.

To Reinstall:

1. Replace the E-clip.
2. Reconnect the C-link cable and the power cable to the Controller PCA.

Download Service Manual And Resetter Printer at http://printer1.blogspot.com

Stapler Assembly Removal and Replacement

Note Reinstallation is generally the reverse of the removal process. Carefully follow any additional instructions provided under “To Reinstall.”

Mailbox with Stapler, Stapler Removal or Installation - - - 367
Back Plate - 369
Stapler Controller PCA - 371
Top Cover Assembly - 374
Stapler Bed Assembly - 375
Hinges - 377

Download Service Manual And Resetter Printer at http://printer1.blogspot.com

Mailbox with Stapler, Stapler Removal or Installation

Figure 6-180 **Mailbox with Stapler, Stapler Removal or Installation**

The Stapler Assembly is mounted in the 5-bin Mailbox with Stapler, replacing the three Face-down bins and the blind cover.

1. Turn off the printer.
2. Make sure the Delivery Head Assembly is not in the stapler area. It should be in the bottom portion of the mailbox. You can move the Delivery Head Assembly downward gently with your hand.

Download Service Manual And Resetter Printer at http://printer1.blogspot.com

3 Disconnect the C-link cable connecting the mailbox to the stapler. See figure 6-181.

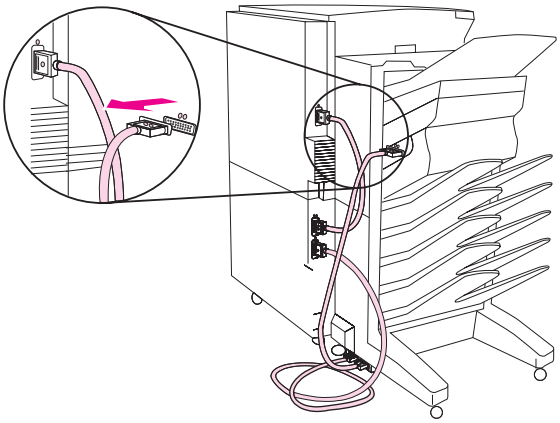

Figure 6-181 **C-link Cable on Mailbox with Stapler**

4 Remove the Face-up Bin (figure 1-3 on page 14). Lift the bin gently to remove it.

5 Lift up on the outer edge of the stapler to clear the retaining notches, and pull the stapler forward out of the frame (figure 6-180).

To Reinstall:

1 Slide the stapler into the 4th slot from the top, and lower it into its retaining notches (figure 6-180).

2 Replace the Face-up Bin.

3 Connect the C-link cable from the mailbox to the stapler. Turn the printer on.

Download Service Manual And Resetter Printer at http://printer1.blogspot.com

Back Plate

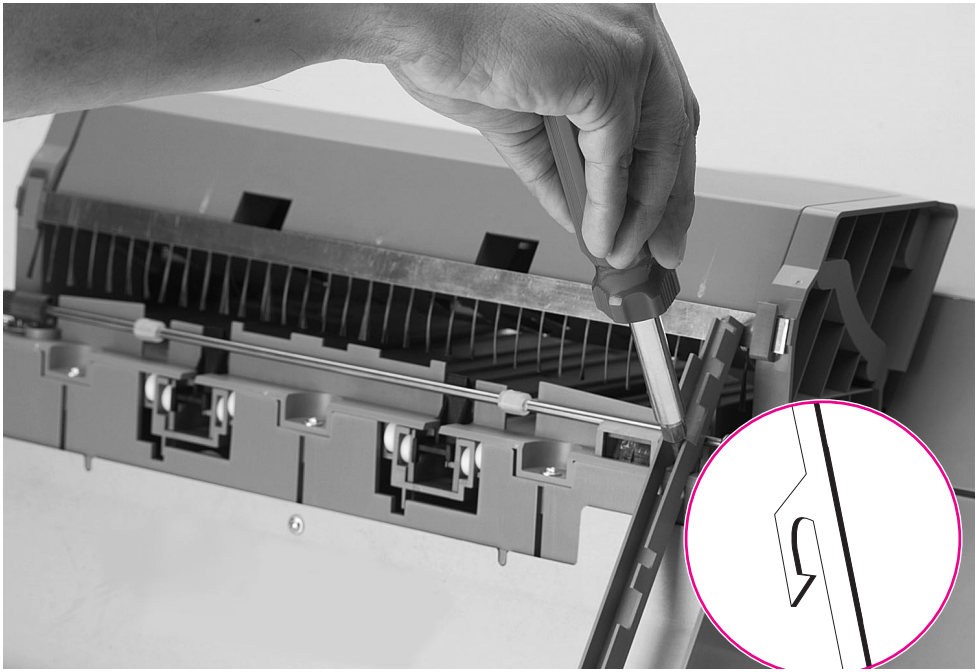

Figure 6-182 **Back Plate (1 of 2)**

1. Remove the Stapler Assembly (see figure 6-180).
2. Remove the Scan Bar by carefully pressing the tab on the scan bar backwards and downwards through the hole of the Stapler Bed (see figure 6-182) with a flat-tip screwdriver, then lift the bar.

Download Service Manual And Resetter Printer at http://printer1.blogspot.com

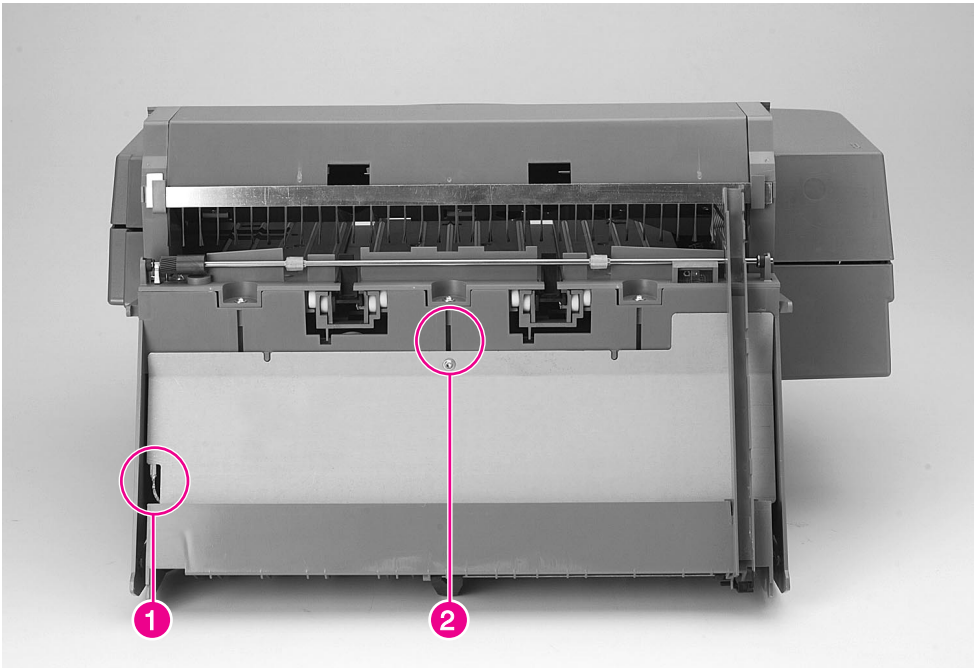

Figure 6-183 **Back Plate (2 of 2)**

3 Remove the Torx screw joining the Back Plate with the Stapler (see figure 6-183, callout 2).

4 Release the ground cable that is connected to the Back Plate (see figure 6-183, callout 1).

To Reinstall:

CAUTION Do not overtighten the screws when replacing the Back Plate. Do not touch the metallic plate edges.

Download Service Manual And Resetter Printer at http://printer1.blogspot.com

Stapler Controller PCA

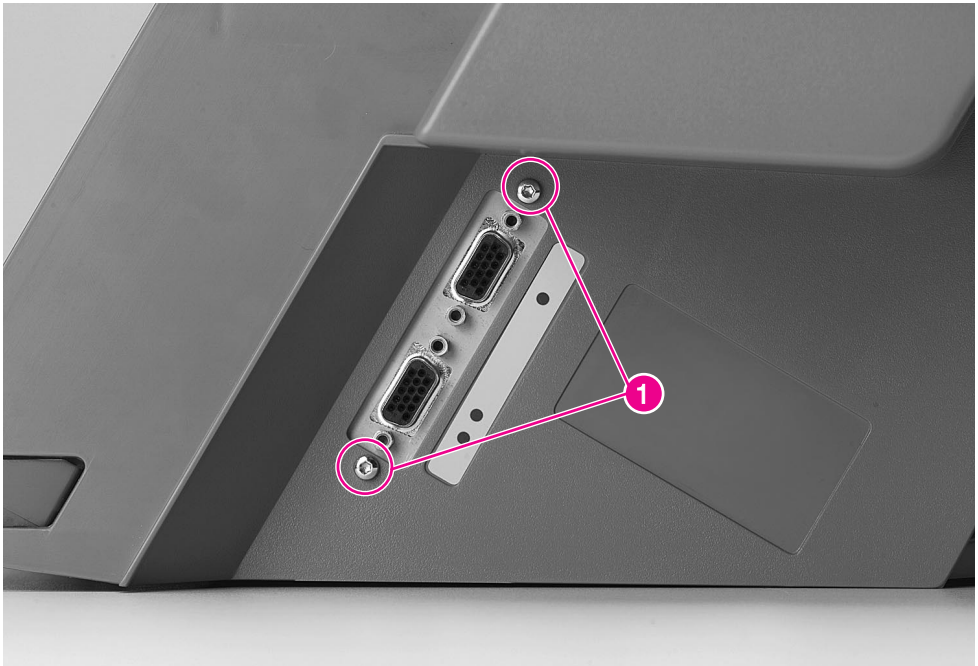

Figure 6-184 **Stapler Controller PCA (1 of 3)**

1. Remove the Stapler Assembly (see figure 6-180).
2. Remove the Back Plate (see figure 6-182).
3. Remove 2 screws located on the right side of the Stapler (see figure 6-184, callout 1).

Download Service Manual And Resetter Printer at http://printer1.blogspot.com

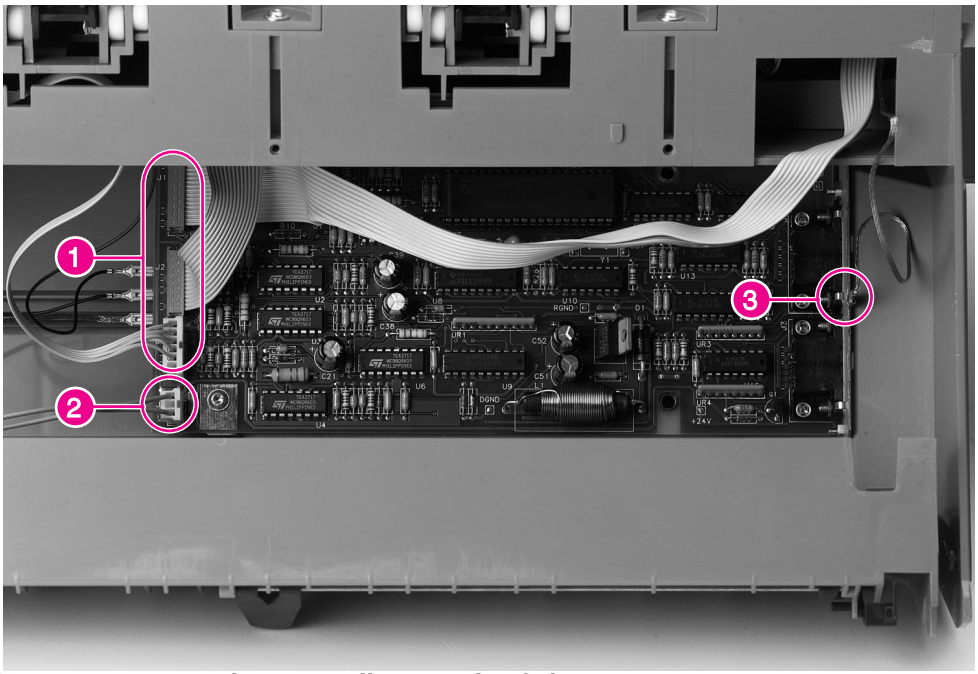

Figure 6-185 **Stapler Controller PCA (2 of 3)**

4 Unplug the cables that are connected to the PCA. Identify their color and size and the ground cables (see figure 6-185, callouts 1 and 2).

Download Service Manual And Resetter Printer at http://printer1.blogspot.com

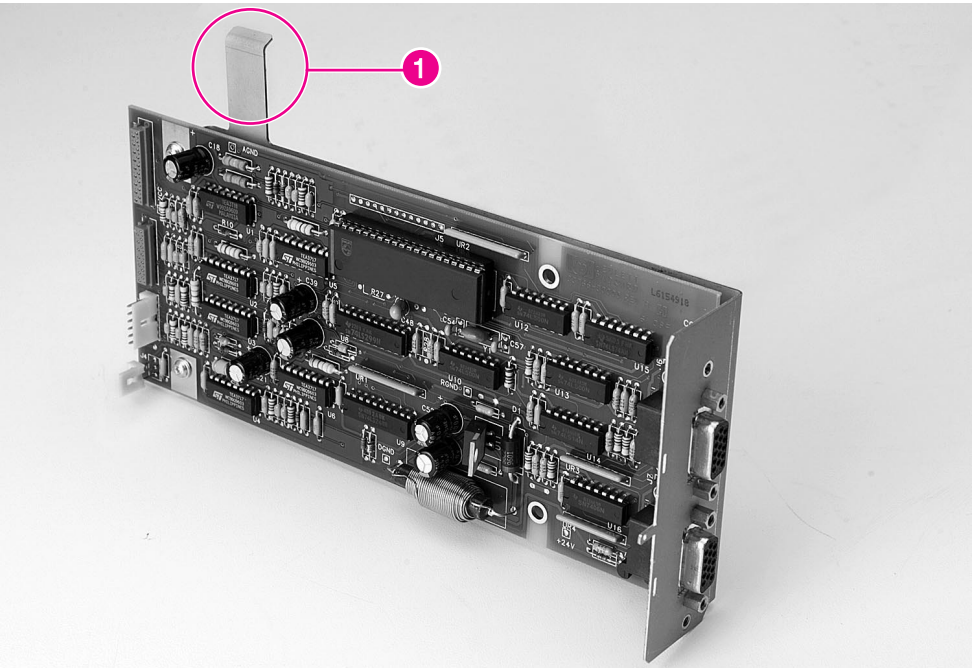

Figure 6-186 **Stapler Controller PCA (3 of 3)**

5 The board is supported by a hooked tab at the top of the card (see figure 6-186, callout 1). Slide the board to the left and then down.

To Reinstall:

1 Slide the board up and then to the right.

2 Reconnect all cables.

Download Service Manual And Resetter Printer at http://printer1.blogspot.com

Top Cover Assembly

Figure 6-187 **Top Cover Assembly**

1. Remove the Stapler Assembly (see figure 6-180 on page 367).
2. Open the Top Cover Assembly, and remove the Back Plate (see figure 6-182 on page 369).
3. Unplug the ground and signal cables from the right side of the Stapler Controller board, being careful to keep them in the cable holder. See callout 1 and 3 on figure 6-185.
4. On each side of the assembly, pull the hinge to release the 2 posts from the retaining notches (see figure 6-187).

To Reinstall:

CAUTION Keep the Top Cover Assembly open while reconnecting the cables. Cable damage could occur the next time the cover is opened if the cables are reinstalled too tightly.

Download Service Manual And Resetter Printer at http://printer1.blogspot.com

Stapler Bed Assembly

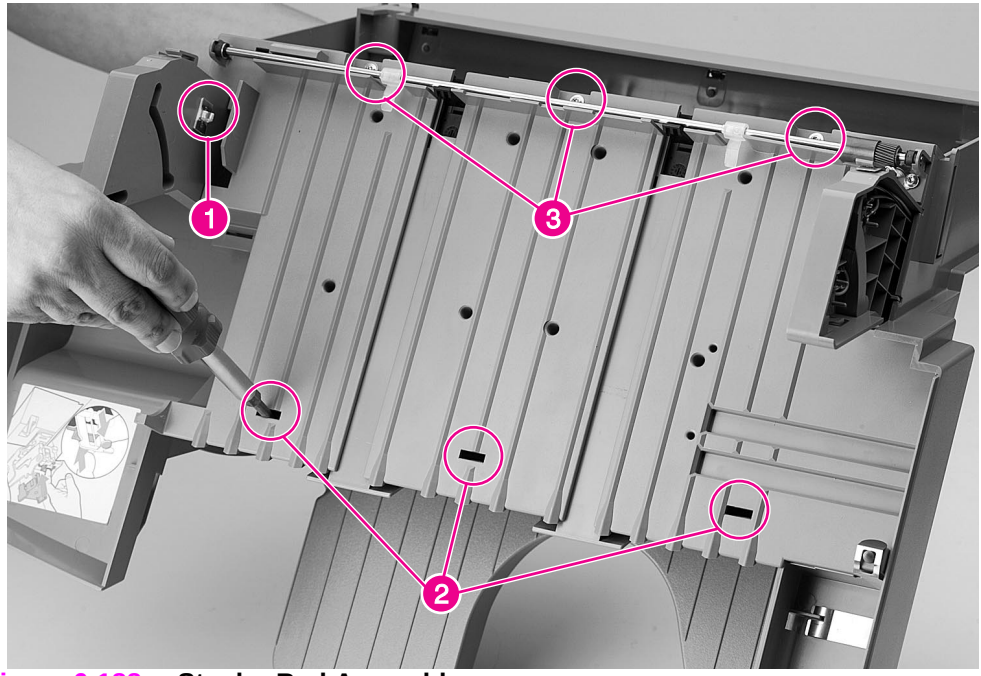

Figure 6-188 **Stapler Bed Assembly**

1. Remove the Stapler Assembly (see figure 6-180 on page 367).
2. Remove the Back Plate (see figure 6-182 on page 369).
3. Remove the Stapler Unit Controller PCA (see figure 6-188 on page 375, callout 1).
4. Remove the Top Cover Assembly (see figure 6-187 on page 374).
5. Remove the wire frame by pushing both arms of the wire frame toward the center to clear the retaining notches and lift.
6. Release the brushes bar from the retaining notches and lifting upwards.
7. Insert a flat-blade screwdriver into the top of the Stapler Bed Assembly and push gently to release the latches in the front of the stapler bed (see figure 6-188 on page 375, callout 2).
8. Remove 3 Torx screws that join the stapler bed with the rest of the unit (see figure 6-188 on page 375, callout 3).
9. To remove the Stapler Bed Assembly, lift the edge of the assembly where the stapler unit resides, then gently lift the entire Stapler Assembly.

Download Service Manual And Resetter Printer at http://printer1.blogspot.com

To Reinstall:

Replace the Stapler Bed. Replace the Stapler Controller. Replace the actuator for the paper bin empty sensor.

CAUTION Make sure that the actuator is oriented as shown in its proper place before replacing the Stapler Bed Assembly (see figure 6-189 on page 377, callout 3).

Download Service Manual And Resetter Printer at http://printer1.blogspot.com

Hinges

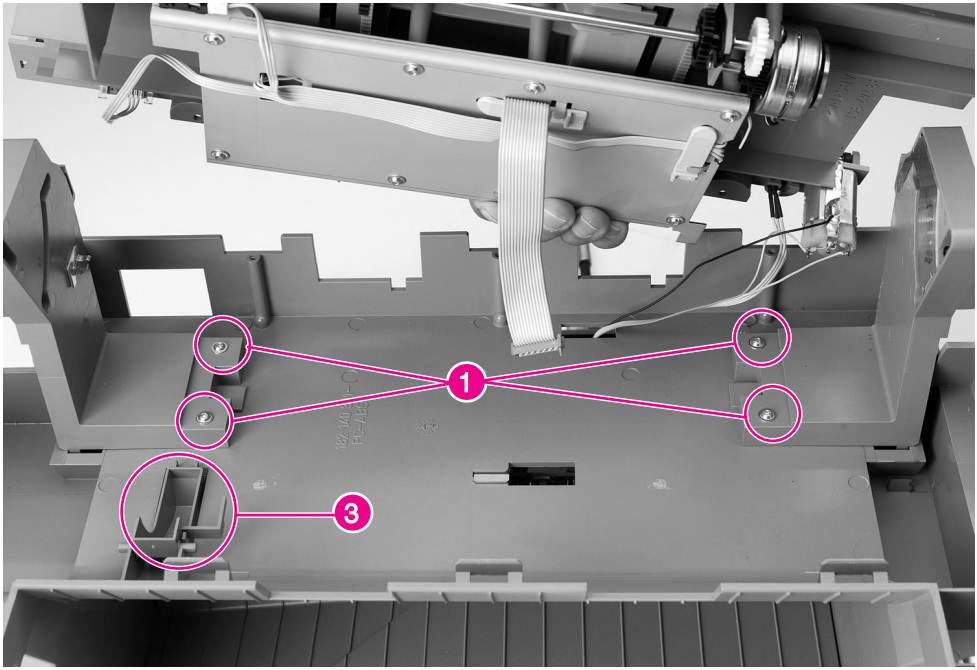

Figure 6-189 **Hinges**

1. Remove the Stapler Assembly (see figure 6-180 on page 367).
2. Remove the Top Cover Assembly (see figure 6-187 on page 374).
3. Remove the Stapler Bed Assembly (see figure 6-188 on page 375).
4. Release the brushes bar from the retaining notches, and lift upwards.
5. Remove 2 screws joining each hinge to the housing (see figure 6-189, callout 1).
6. Disconnect the 2 cables in the hinge containing cables from the Stapler Controller PCA (see figure 6-185 on page 372, callout 2).

Download Service Manual And Resetter Printer at http://printer1.blogspot.com

Download Service Manual And Resetter Printer at http://printer1.blogspot.com

7 Troubleshooting

Chapter contents

Troubleshooting Process - - - - - - - - - - - - - - - - - - 380
Troubleshooting the Printing System - - - - - - - - - - - - 384
General Troubleshooting Information - - - - - - - - - - - - 385
Power On - 391
Display - 395
General Paper Path Troubleshooting - - - - - - - - - - - - 399
Printer Messages - 405
Input Devices
2000-sheet Input Tray Error Messages - - - - - - - - - - - 421
2 x 500-sheet Input Tray Error Messages - - - - - - - - - - 425
Envelope Feeder Error Messages - - - - - - - - - - - - - - 428
Output Devices
7-bin Tabletop Mailbox Error Messages - - - - - - - - - - - 429
8-bin Mailbox Error Messages - - - - - - - - - - - - - - - 434
Finisher Devices
Stapler Error Messages - - - - - - - - - - - - - - - - - - 440
Duplexer Error Messages - - - - - - - - - - - - - - - - - - 443
Paper Handling Controller Error Messages - - - - - - - 444
Self - Diagnostics on Paper-handling Devices - - - - - - - 445
Information Pages - 466
Communication - 473
Image Quality - 475
Network Troubleshooting - - - - - - - - - - - - - - - - - - 495
Diagrams - 498

Download Service Manual And Resetter Printer at http://printer1.blogspot.com

Troubleshooting Process

The troubleshooting process is a systematic approach that addresses the major problems first and then other problems as you identify the causes for printer malfunctions and errors. The Troubleshooting Process, figure 7-1 on page 382 and figure 7-2 on page 383, illustrates the major steps for troubleshooting the printing system. Each heading depicts a major troubleshooting step. A **YES** answer to the questions allows you to proceed to the next major step.

A **NO** answer indicates that additional testing is needed. Proceed to the referenced location and follow the directions for that area. After completing the additional testing, proceed to the next major step.

The following list describes the basic questions for the customer and the corresponding troubleshooting step to help you quickly define the problem(s).

Table 7-1. Major Steps for Troubleshooting

"Display" on page 395	**Does the display panel indicate** `READY`**,** `OFFLINE`**, or** `POWERSAVE ON`**?** Contains the procedures for correcting control panel messages and displaying and correcting Event Log codes.
"Information Pages" on page 466	**Will the printer print a configuration page successfully?** Contains the procedures for printing the configuration page and evaluating and correcting system configuration.
"Image Quality" on page 475	**Does the print quality meet customer expectations?** Contains the image quality comparison tables, cleaning procedures, toner cartridge checks, and High-voltage Power Supply checks.
"Event Log" on page 395	**Are there recurring problems in the Event Log?** Contains information about printing the Event Log and evaluating the error history.
"Communication" on page 473	**Can the customer print from the host system successfully?** Describes how to determine if the printer is communicating properly with the host system.
"Paper Jams" on page 400	**Are there paper jams?** Contains procedures for clearing paper jams.

Download Service Manual And Resetter Printer at http://printer1.blogspot.com

Table 7-1. Major Steps for Troubleshooting (continued)

“Printer Messages” on page 405	**Does the control panel display an error message?** Contains a list of control panel error messages and recommended actions.

Download Service Manual And Resetter Printer at http://printer1.blogspot.com

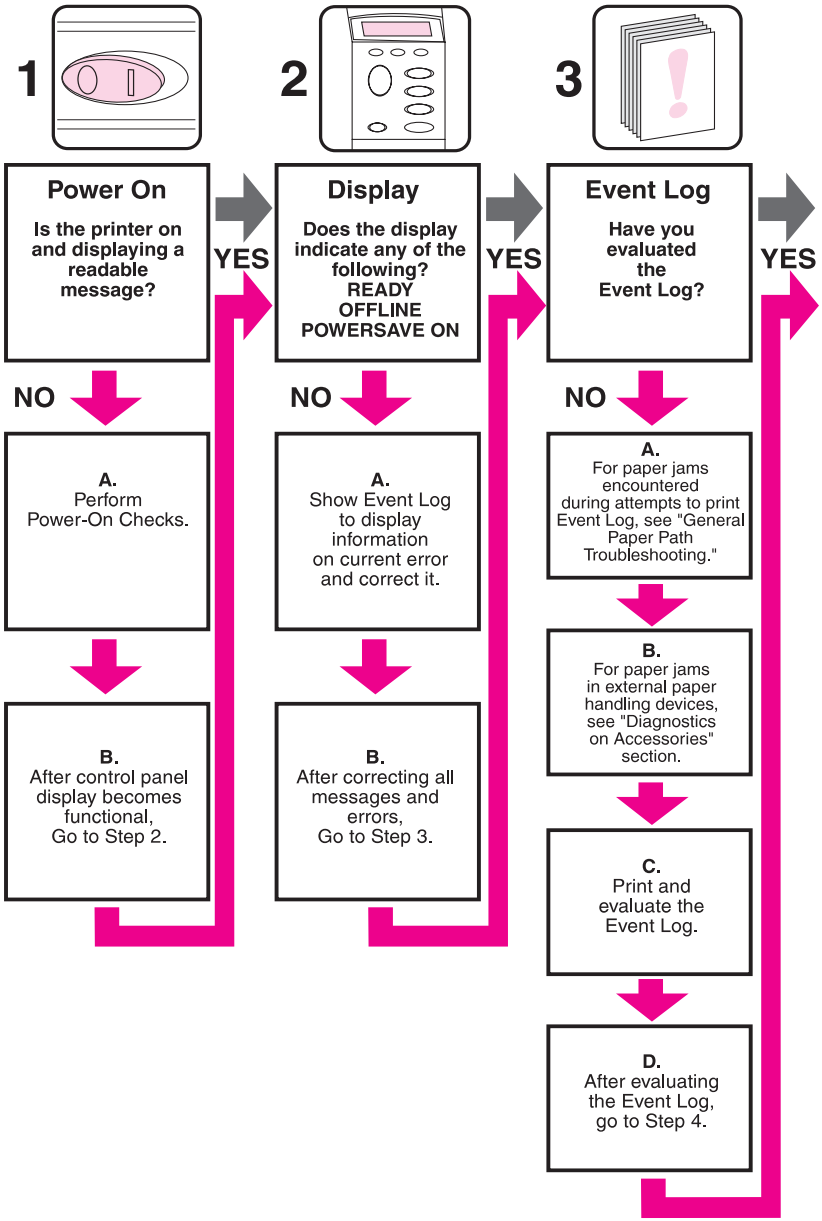

Figure 7-1 **HP LaserJet Troubleshooting Process (1 of 2)**

Download Service Manual And Resetter Printer at http://printer1.blogspot.com

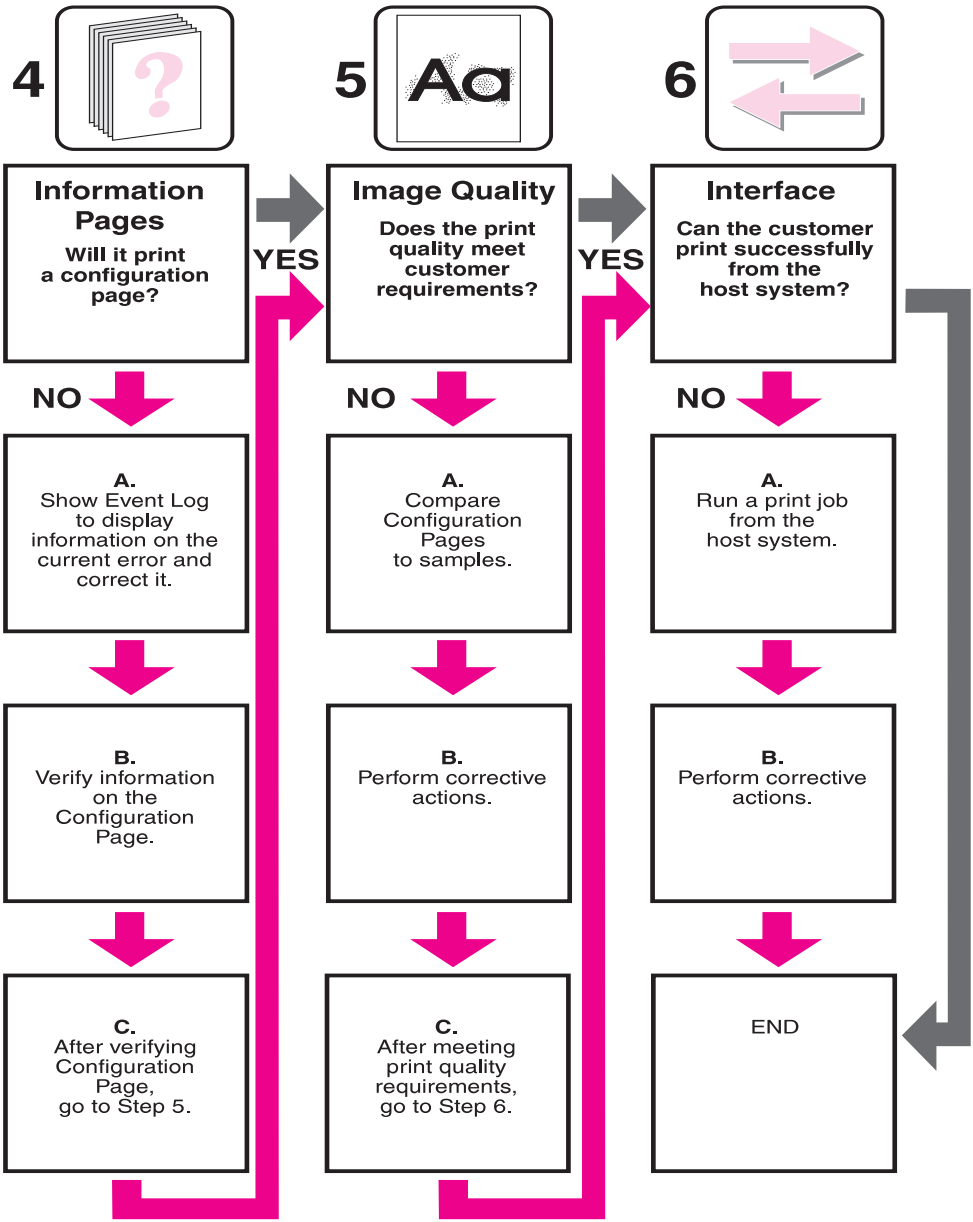

Figure 7-2 **HP LaserJet Troubleshooting Process (2 of 2)**

Download Service Manual And Resetter Printer at http://printer1.blogspot.com

Troubleshooting the Printing System

Preliminary Operating Checks

Prior to troubleshooting a specific printer problem, you should ensure that

- The printer is being maintained on a regular basis as described in Chapter 4.
- The customer is using acceptable paper as specified in the *HP LaserJet Printer Family Paper Specifications Guide*.
- The printer is positioned on a solid, level surface.
- The line voltage does not vary more than 10% from the nominal rated value as specified on the Power Rating Label.
- The operating environment for the printer and paper is within the temperature and humidity specifications listed in Chapter 1 of this manual.
- The printer is never exposed to ammonia fumes such as those produced by diazo copiers or office cleaning materials.
- The printer is not exposed to direct sunlight.
- Non-HP components (such as refilled Toner Cartridges, font cartridges, and memory boards) are removed from the printer.

Note When moving the printer into a warm room from a cold location such as a warehouse, various problems can occur due to condensation in the printer. For example, if the photosensitive drum is cold, the resistance of the photoconductive layer will be high. This will lead to incorrect contrast. Leave the printer running for 10 to 20 minutes.

Download Service Manual And Resetter Printer at http://printer1.blogspot.com

Miscellaneous Problems and Solutions

The following lists symptoms and typical solutions to those problems.

Abnormal noises are evident, such as grinding or chattering when main motor energized.

From the toner cartridge area:

1. Replace the toner cartridge.
2. Replace the Main Gear Assembly. See “Main Gear Assembly” on page 206 for instructions.

From Tray 2 or 3:

1. Verify proper paper loading, acceptable media.
2. Inspect the “fingers” on the paper trays to ensure proper paper size detection.
3. Replace the Paper Input Unit. See “Paper Input Unit (PIU)” on page 210 for instructions.
4. Replace the Main Gear Assembly. See “Main Gear Assembly” on page 206 for instructions.

From 2000-sheet Input Tray:

1. Check the white plastic bushing on Tray 4. The bushing is located on the Tray 4 main drive assembly. The bushing accepts the Tray 4 pilot pin when Tray 4 is closed. Replace if broken.
2. Replace 2000-sheet Input Tray Vertical Transfer Assembly.
3. Replace the 2000-sheet Input Tray Main Drive Assembly.

From 8-bin Mailbox:

1. Verify pawls are riding above the output rollers (see figure 7-18 on page 499).

Download Service Manual And Resetter Printer at http://printer1.blogspot.com

Will not feed from Tray x when printing from application; paper path test works fine.

Verify the correct paper size:

1. Tray 1: From Control Panel Paper Handling Menu.
2. Tray 2, 3, 4, or 5: Remove and reseat the paper fences in the correct position in the failing tray.

Excessive Image Skew

1. Remove and reseat the paper fences (front fence in paper trays).
2. Image Skew Specifications:
   - 1 mm over 260 mm length
   - First line to leading edge 5.0 +/- 2.5 mm
   - Text Stretching 1% simplex 1.5% duplex

Envelope

- Skew 6.0 over 260 mm length
- First line on envelopes to leading edge/ left margin 15 +/- 4.5 mm

Loses Page Counts, Serial Number.

Print the Event Log and look for a 68 error with a page count of zero. Using the Event Log, take the page count shown at the top of the page and add the page count from any/all errors preceding any 68 errors. Use this number and enter it into the Control Panel from Service Mode.

Will not print from 2000-sheet Input Tray or 2 x 500-sheet Input Tray.

1. Print the Configuration Page. Make sure that the Paper Handling Controller and 2000-sheet or 2 x 500-sheet Input Tray are listed in the Paper Handling Options section.
2. Verify that power is supplied the to the 2000-sheet or 2 x 500-sheet Input Tray.

Download Service Manual And Resetter Printer at http://printer1.blogspot.com

3 Run a paper path test from Tray 4 or 5. If the test is successful, the paper size detection switches may have failed or an incorrect size is specified in the application software.

4 Replace the Paper Handling Controller if it is not shown on the Configuration Page.

5 Verify that the C-link cables are connected as shown in figure 7-14 on page 473.

6 Reseat the C-link Cable, and inspect for pushed in pins.

7 Replace the C-link Cable.

8 Replace the 2000-sheet or 2 x 500-sheet Input Tray Controller PCA.

Jams when printing envelopes, transparencies, or labels to the 8-bin Mailbox or 5-bin Mailbox with Stapler.

The 8-bin Mailbox does not support these media. Direct these media to the Face-up Bin (top bin of the 8-bin Mailbox).

Stops printing and hangs on certain jobs.

1 Remove any non-HP Memory DIMMs and retry.

2 Set to 300 DPI and retry.

Top 2/3 of portrait page is lighter.

1 Replace the Toner Cartridge and retry.

2 Replace the Transfer Guide.

Will not print to Mailbox.

1 Print the Configuration Page. Make sure that the Paper Handling Controller, 2000-sheet Input Tray, and 8-bin Mailbox are listed in the Paper Handling Options section.

2 Replace the Paper Handling Controller if it is not shown on the Configuration Page.

3 Inspect the C-link Cables for pushed out pins.

4 Replace the C-link Cables.

5 Connect the 8-bin Mailbox directly to the printer. If it is now recognized on the Configuration Page, replace the 2000-sheet Input Tray Controller.

6 Replace the 8-bin Mailbox Controller.

7 Replace the 8-bin Mailbox External Power Supply.

8 Replace the entire 8-bin Mailbox.

Download Service Manual And Resetter Printer at http://printer1.blogspot.com

Wrinkling Envelopes

1 Place the Fusing Levers in up position and retry the envelopes.

2 Try new media. Make sure that the envelopes are within specifications. See the *HP LaserJet Family Paper Specifications Guide*.

Poor Fusing

1 Make sure that the Fusing Levers are in the down position for cut sheet paper.

2 Try new media. Make sure that the media is within specifications.See the *HP LaserJet Family Paper Specifications Guide*.

3 Make sure that the AC power does not fluctuate out of range during the print cycle. See table 1-6 on page 9.

Feeds from incorrect tray when selecting different media for the first page of the job.

First you must determine if it is a hardware or a software issue. Run a paper path test from each paper tray to eliminate the hardware. See page 402.

If the paper path test fails, troubleshoot the error message.

Make sure that the most current printer driver is installed. Select the **Print Quality Tab** from the printer driver. Click on **About**.You may find the most current driver in various electronic locations. Check with HP Service and Support.

If the paper path test works, it may be a software or user related issue. Perform the following steps:

1 Define the media types that are loaded in each paper tray. This can be done from either JetAdmin or the front control panel of the printer.

From JetAdmin

1 Select the Trays tab.

2 Select the correct media type for each tray listed.

3 Click on **OK** save your changes and exit JetAdmin.

Download Service Manual And Resetter Printer at http://printer1.blogspot.com

From the Control Panel

Note To set the paper type for Tray 1, set `TRAY 1 MODE=CASSETTE` from the Paper Handling Menu.

1. From the Paper Handling Menu, press ITEM to select a specific tray.
2. Press + until you get to the correct type of media.
3. Press SELECT.
4. Repeat this step for each paper tray.
5. Press GO.
6. From inside your application, choose the page setup option for that application.
7. Select the paper source / type option.
8. Select the correct media source / type for the first page.
9. Select the correct media source / type for all other pages.

Note You must have the HP LaserJet 8100 printer selected in your application in order for your application to provide you with the correct paper tray and media type selections.

CAUTION Do not make changes to the driver unless the application does not provide this option. Print job settings selected through your application always override settings made through the printer driver. Printer settings made in the application or print driver always override the corresponding setting made on the printer Control Panel.

10. Print the document.

Download Service Manual And Resetter Printer at http://printer1.blogspot.com

Paper Curl

Paper curl is inherent to the laser printing processes, as it occurs when paper is subjected to heat. Paper curl tends to relax as the paper cools while resting on a flat surface. The specification for maximum paper curl when the paper is lying flat before print is 0.2 inches (5 mm).

Although paper curl cannot be totally eliminated, some steps can be taken to lessen its impact, as suggested in the following table.

Table 7-2. Paper Curl

Possible Cause	Recommended Action
1. Paper Path	Try using Tray 1 and output the paper to the Face-up Bin.
2. Paper Surface	The recommended printing surface of the page is usually marked on the end of a ream of paper, indicated by a small arrow and the phrase “print this side first.” Load paper in Tray 1 with the recommended printing surface facing up (facing down in Trays 2, 3, 4, and 5).
3. Paper Storing and Handling	Over time, paper assumes the characteristics of its storage environment (in a humid environment, paper absorbs moisture; in a dry environment, paper loses moisture). Paper with higher moisture content will tend to curl more. Evaluate the storage conditions of the paper.
4. Paper Type	All paper is manufactured differently (different textures, moisture content, drying processes, composition, etc.). Change the type of paper being used and re-evaluate the paper curl results.

Download Service Manual And Resetter Printer at http://printer1.blogspot.com

Power On

It is important to have the printer's Control Panel functional as soon as possible in the troubleshooting process so that the printer's diagnostics can assist in locating printer errors.

Table 7-3. Power On Defects or Blank Display

Problem	Action
1. Is AC power available at the printer's power receptacle?	Verify. See table 1-6, “Electrical Specifications,” on page 9.
2. Is the printer's on/off switch set to on?	Push the switch to the on position.
3. Are the printer's fans on? (See figure 7-3 on page 393 to locate the fans.)	Note: Fan operation is significant since all fans are controlled by the printer's DC Controller PCA. When the printer is in PowerSave mode, the fans are off. Make sure that the printer is not in PowerSave mode. Press Go. Operational fans indicate: 1. AC power is present in the printer. 2. DC power supply is functional (both 24V DC and 5V DC are being generated). 3. DC Controller PCA's micro-processor is functional.
NO	If the fans are NOT working, turn off the printer and remove the printer's Formatter PCA. Disconnect all the printer's paper handling options. Then turn on the printer and check the fans again. If the fans are still not working, perform the following steps: 1. Verify that all fans are connected to the DC Controller PCA according to figure 7-23 on page 504. 2. Replace the low-voltage DC power supply. See “Low Voltage Power Supply (LVPS)” on page 220 for instructions. 3. Replace the DC Controller PCA. See “PCA, DC Controller” on page 211 for instructions.

Download Service Manual And Resetter Printer at http://printer1.blogspot.com

Table 7-3. Power On Defects or Blank Display (continued)

Problem	Action
YES	If the fans are working but the printer's Control Panel is blank, print an engine test. See “Engine Test” on page 394. If the engine test was successful, perform the following steps: 1. Reseat or replace the cable from the Control Panel that is connected to J203 of the DC Controller PCA (see the main wiring diagram in the back of the manual). 2. Replace the printer's Formatter PCA. See “Formatter Assembly” on page 200 for instructions. 3. Replace the Control Panel assembly. See “Control Panel” on page 165 for instructions. If the engine test was not successful, verify that there is no paper in the paper path. Retry the engine test. If the engine test is still unsuccessful, replace the DC Controller PCA. See “PCA, DC Controller” on page 211 for instructions.

Download Service Manual And Resetter Printer at http://printer1.blogspot.com

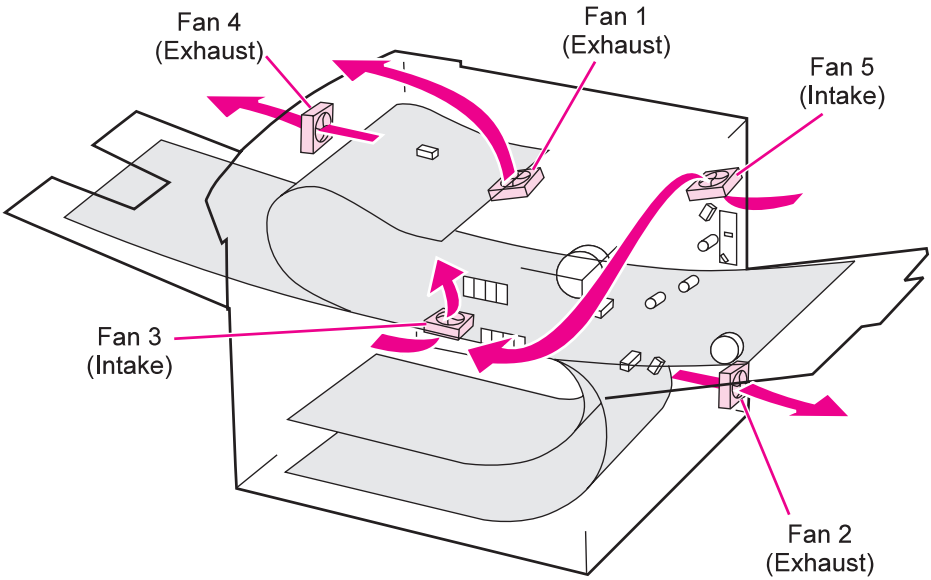

Figure 7-3 **Fan Location and Airflow**

Table 7-4. Fans

Fan Name	Fan Location
Fan 1: Low-voltage Power Supply Fan	Lower right-hand corner of the printer.
Fan 2: Laser/Scanner Fan	Exhaust air flows from the back of the printer, on the left-hand side of the fusing assembly.
Fan 3: Formatter Fan (intake)	Intake fan directly above the input power receptacle.
Fan 4: Standard Output Delivery Fan	Directly above the center of the fusing assembly.
Fan 5: MP Tray (Intake) Fan	Right side of MP (Tray 1) Assembly

Note Control Panel numbers do not correspond to fan numbers (i.e., a fan error ending in `.1` does NOT refer to Fan 1).

Download Service Manual And Resetter Printer at http://printer1.blogspot.com

Engine Test

The engine test verifies that the print engine is functioning correctly. This test is very useful for isolating printer problems since the Formatter PCA is completely bypassed during an engine test. The engine test prints a full page of horizontal lines across the entire printable area. The engine test prints from Tray 3 ONLY and can be activated with the Formatter PCA removed.

Note Tray 3 **must** be installed and loaded with paper to perform an engine test. Also, make sure that the EP toner cartridge is installed in the printer.

Engine Test Button Location

The engine test button is located on the DC Controller PCA. It is accessible through a hole at the right rear of the printer. See figure 7-4.

Printing an Engine Test

To print an engine test, use a non-metallic object (such as a pencil) to press the engine test button (see figure 7-4). A single test page will print.The engine test will be continuous as long as the button is held in.

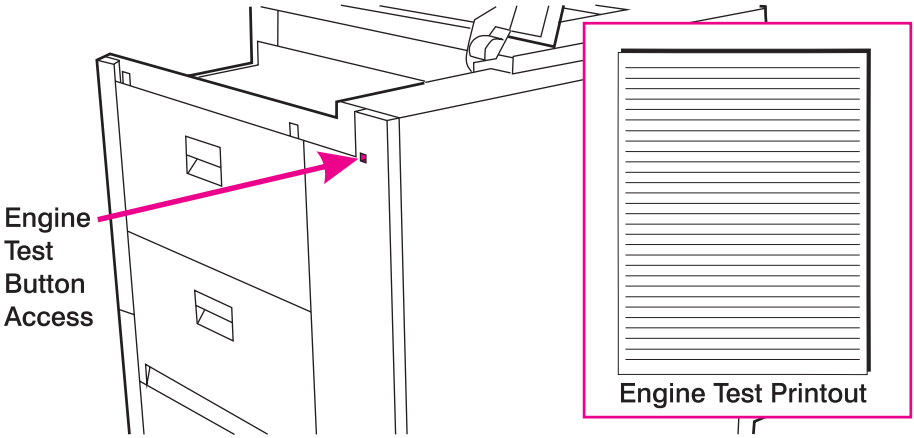

Figure 7-4 **Engine Test Button**

Download Service Manual And Resetter Printer at http://printer1.blogspot.com

Display

The Control Panel should display READY, OFFLINE, or POWERSAVE ON. For information about errors displayed, access the Event Log. If the display is blank, see “Power On Defects or Blank Display” on page 391.

Event Log

Use the Event Log to diagnose and troubleshoot printer errors and intermittent failures. You can either print or display the Event Log from the Control Panel’s Information Menu. (Select PRINT EVENT LOG or SHOW EVENT LOG.) (The Configuration Page lists the maximum number of entries in the Event Log.)

See figure 7-5 on page 396 for a sample Event Log. The Event Log shows the current page count at the left side of the page, with the printer's serial number directly to the right of the page count. The left column is the error sequence number, with the error listed on the right (the highest sequence number is the most recent event logged). The next column is the page count at the time of the error, and the last column is the Personality (PCL or PostScript) column or the Jam Cause at the time of the error.

See “Printer Message Tables” on page 408 for more information about correcting Event Log messages in the printer and paper handling devices.

Download Service Manual And Resetter Printer at http://printer1.blogspot.com

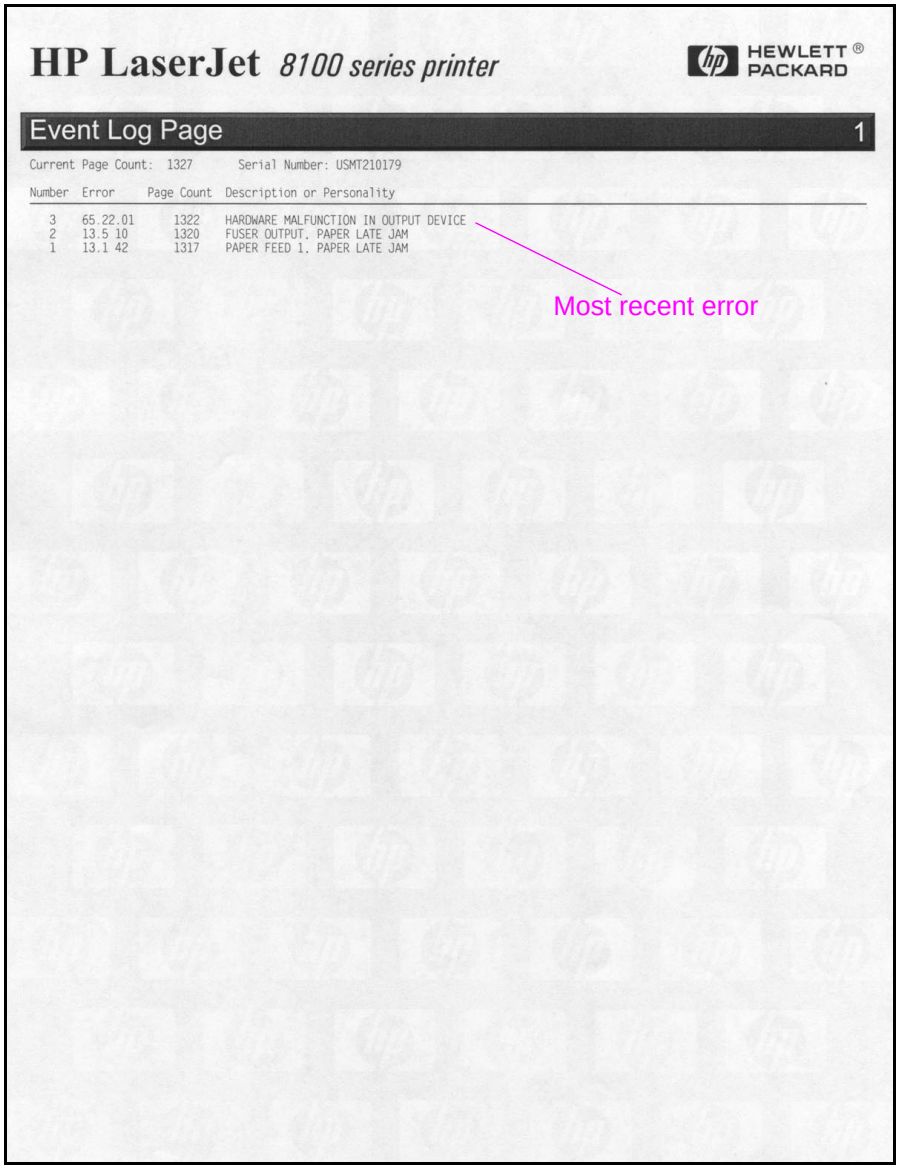

HP LaserJet 8100 series printer

HEWLETT PACKARD

Event Log Page 1

Current Page Count: 1327 Serial Number: USMT210179

Number	Error	Page Count	Description or Personality
3	65.22.01	1322	HARDWARE MALFUNCTION IN OUTPUT DEVICE
2	13.5 10	1320	FUSER OUTPUT, PAPER LATE JAM
1	13.1 42	1317	PAPER FEED 1, PAPER LATE JAM

Most recent error

Figure 7-5 **Sample Event Log**

Print the Event Log

The printer's internal Event Log stores the most recent errors and can be printed at any time. To print the Event Log:

1. Press **Menu** until `INFORMATION MENU` appears.

Download Service Manual And Resetter Printer at http://printer1.blogspot.com

2. Press **Item** until `PRINT EVENT LOG` appears.

3 Press **Select** to print the Event Log.

Display the Event Log

If the printer cannot print or move any paper, follow these steps to display the Event Log. Otherwise, print the Event Log.

1. Press **Menu** until `INFORMATION MENU` appears.
2. Press **Item** until `SHOW EVENT LOG` appears.Press **Select** to show the Event Log.
3. Press **- Value +** to scroll through the Event Log.
4. Write down the error messages. For example:

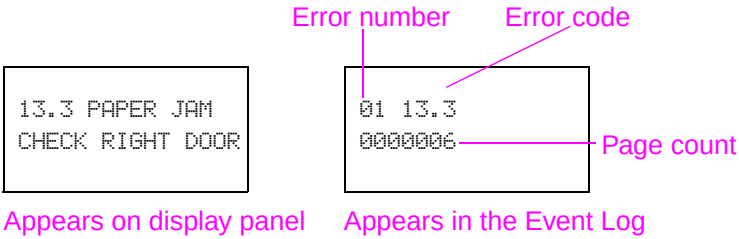

5. Check the Event Log for specific error trends in the last 10,000 printed pages.
6. Ask the customer for any observed error trends. (For example, do paper jams tend to occur in a specific area of the printer?)
7. Record any specific error trends.
8. See “Printer Message Tables” on page 408 and follow the recommended action.
9. If the Control Panel displays `READY`, `OFFLINE`, or `POWERSAVE ON`, go to the next section. If it displays any other message, repeat this procedure starting from step 1.

Download Service Manual And Resetter Printer at http://printer1.blogspot.com

Interpret the Event Log

See figure 7-5 on page 396 for a sample Event Log.

The errors on the control panel and the Event Log codes may not be the same. For example, `13.11` on the control panel may be `13.11 1B` in the Event Log. The 1B provides more information about the error. Likewise, if a `50.1 FUSER ERROR` is displayed on the Control Panel, the Event Log will record a `50.02.01` error, with the `02` signifying that 2 sensors were blocked. Make sure that you refer to the correct number in “Printer Message Tables” on page 408.

When an error is detected in an Optional Paper Handling Device, a `13.11, 11.zz, 22.zz to 13.12,13.22,` or `66.xy.zz` will be displayed on the Control Panel.

Hint

Whenever a `13.xx` appears on the Control Panel, a good practice is to clear the jammed paper from the printer, press Go to take the printer offline, and print the Event Log. If you cannot print the Event Log, you can still display it on the Control Panel. The last error is the error at the top of the Event Log printout with the highest number in the left-most column. Write the error next to the last error logged.

To interpret the Event Log:

- Each individual entry in the log is called an “error,” while all errors occurring at the same page count are called an “event.” See the Recommended Action in “Printer Message Tables” on page 408 for each error comprising an event to gain a clear picture of what took place during that event. Events usually conclude with a time-out or no response from the device (error `66.xy` in the Event Log). Turn the printer off, and then turn the printer on.
- Use the Event Log table in this section to associate errors in the Event Log with the Control Panel error message. Follow the Recommended Action listed in the Event Log Table starting on page 408 for each error or event.

Note

It is assumed that any Paper Handling Devices are connected as shown in the C-link Cable Diagram (figure 7-14 on page 473). The errors will be logged with different device numbers if any non-standard cabling is installed.

Download Service Manual And Resetter Printer at http://printer1.blogspot.com

General Paper Path Troubleshooting

Paper jams occur in the printer when paper either does not reach or clear a photosensor along the printer's paper path in a specific amount of time. If a paper jam occurs, a `13.xx PAPER JAM` message is displayed on the printer's Control Panel. The following lists general questions you should ask and topics you should explore prior to troubleshooting:

Table 7-5. General Paper Path Troubleshooting Questions

Problem	Action
What is the frequency of the paper jams (e.g. continuous, one jam per 100 pages, one jam per 1000 pages, etc.)?	Verify with the customer. Print or display the Event Log to determine paper jam history. See “Display” on page 395 and “Printer Messages” on page 405 and evaluate the Event Log.
Do paper jams only occur when the paper is fed from a particular paper input source (e.g., Tray 1, Tray 2, Tray 3, Tray 4, Tray 5, or Envelope Feeder)?	See “Paper Jams” on page 400 and use the Paper Path Test to isolate the problem.
Do jams only occur when paper is output to a specific output bin (e.g., Face-down bin, Face-up Bin, mailbox bin, duplex operation, stapler)?	Use “Paper Path Test” on page 402 to isolate the problem.
Do paper jams occur with a specific type of media?	Try known good media. See the *HP LaserJet Printer Family Paper Specifications Guide*.
Where does the leading edge of the first sheet of paper in the printer's paper path stop when a jam occurs? Are any sheets of paper physically damaged or torn?	Attempt to duplicate. See “Paper Path Test” on page 402. Inspect the paper path and all paper path mechanical assemblies prior to the leading paper jam.

Download Service Manual And Resetter Printer at http://printer1.blogspot.com

Table 7-5. General Paper Path Troubleshooting Questions (continued)

Problem	Action
Is the customer loading the paper trays correctly?	Observe the customer loading the paper. Do not fan the paper. See proper paper handling procedures in the *HP LaserJet Printer Family Paper Specifications Guide*.
Is the customer overfilling the paper trays?	Make sure that the paper is NOT over the maximum fill marks in the paper trays. Observe the customer loading paper in the trays.
Are the paper tray guides set correctly?	Make sure that the Tray 2 and 3 left-side paper fence is set correctly at both the front and rear of the tray. Make sure that the front fence is locked into the correct position. For Tray 4, make sure that all adjustments are set correctly: front, back, and side at the top and bottom of the tray.
Does the printer need cleaning?	Inspect the paper path and paper path rollers. See “Cleaning the Printer and Accessories” on page 86.
When was the User Maintenance performed on the printer?	From the Configuration Page, determine the number of pages since the last maintenance (see figure 7-12 on page 469). The Printer Maintenance Kit should be installed every 350,000 images.

Paper Jams

Paper jams occur most often when:

- Paper trays are not correctly loaded. Make sure the paper is loaded with the arrow pointing up in Tray 1 and down in Trays 2, 3, 4, and 5.
- The print media does not meet the specifications listed in the *HP LaserJet Printer Family Paper Specifications Guide*.
- The media is in poor condition.
- The printer needs cleaning.

The printer monitors the timing of four sensors to determine that a paper jam has occurred: PS2, PS1, PS1403, and PS1402.

Download Service Manual And Resetter Printer at http://printer1.blogspot.com

If a paper jam occurs, the printer will display a `13.x PAPER JAM` message on the control panel. See “Printer Message Tables” on page 408 for detailed descriptions of the `13.x` messages and the recommended actions to resolve the errors.

Figure 7-6 shows the possible locations for most of the paper jams.

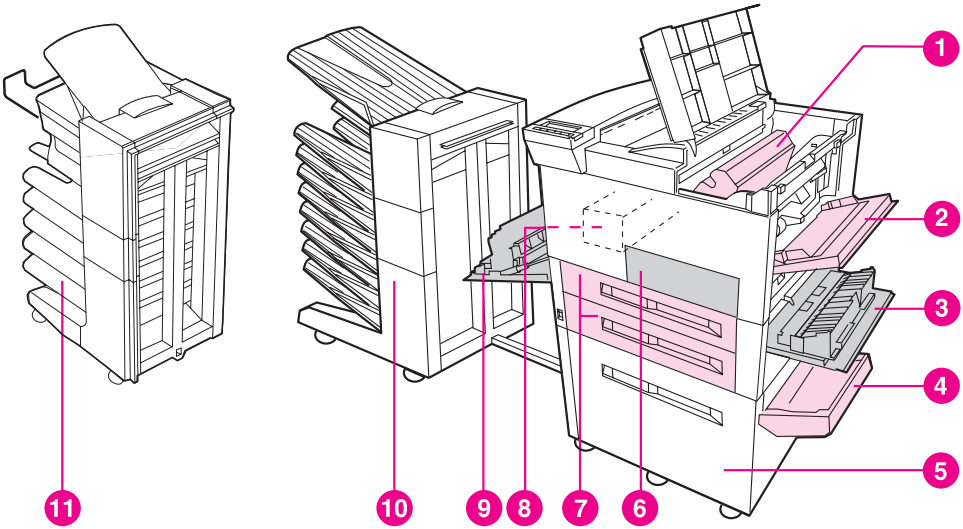

Figure 7-6 **Paper Path Jam Locations**

1. Toner cartridge area
2. Tray 1 pickup roller and feed area
3. Right door
4. Tray 4 (2000-sheet Input Tray) and Tray 5 (2 x 500-sheet Input Tray, not shown) transfer door
5. Tray 4 (2000-sheet Input Tray) and Tray 5 (2 x 500-sheet Input Tray, not shown)
6. Front door
7. Tray 2 and Tray 3
8. Fusing Assembly Area
9. Left door
10. 8-bin Mailbox
    7-bin Tabletop Mailbox (not shown)
11. 5-bin Mailbox with Stapler

Download Service Manual And Resetter Printer at http://printer1.blogspot.com

Paper Path Test

Using the error trend information from “Display” on page 395, you can verify a specific printer paper path with the paper path test. You must first set the desired paper destination in the configuration menu and then select the paper path test. The paper path test menu will allow you to select the desired paper source and number.

Note Feeding paper from Tray 1 will not allow the user to send paper to the Face-down output bins during this test.

Note If the 8-bin Mailbox is installed, in order to perform the paper path test, the printer must be configured to mailbox mode. If the printer is not in mailbox mode, ask the network administrator to change the configuration to mailbox mode to complete this test.

To perform a paper path test:

1. Press MENU until `INFORMATION MENU` appears.
2. Press ITEM until `PRINT PAPER PATH TEST` appears.
3. Press SELECT.
4. Press + or - until the desired input tray appears.
5. Press SELECT.
6. Press + or - until the desired output bin appears.
7. Press SELECT.
8. Press + or - until the desired duplex mode appears.
9. Press SELECT.
10. Press + or - to choose the desired number of copies.
11. Press SELECT.

Download Service Manual And Resetter Printer at http://printer1.blogspot.com

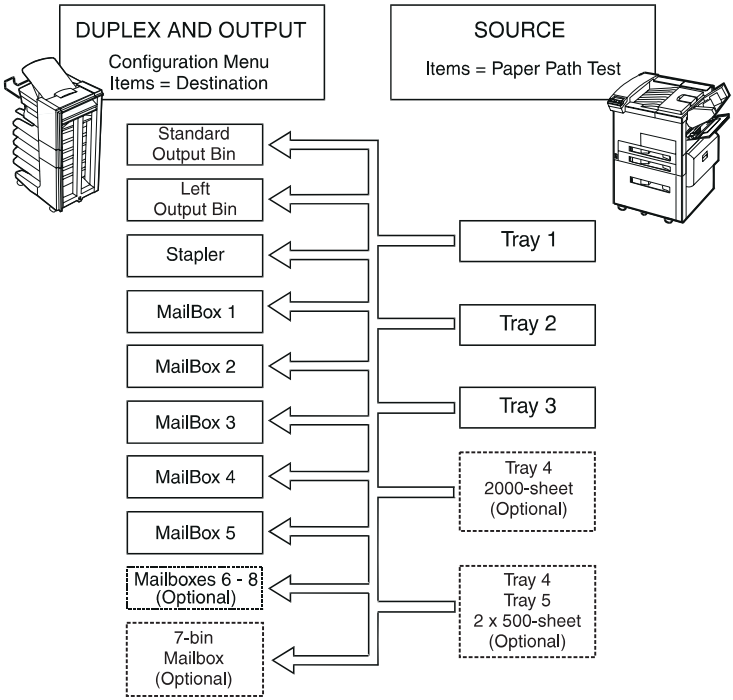

Figure 7-7 **Paper Path Test Source and Output Selection**

Customer Print Job

Ask the customer to send a print job from the problem source(s) to the problem destination(s). Try to recreate the paper jam errors by having the customer do typical print jobs and the type of print job that has been causing the paper jams.

When verifying print jobs, make sure that all of the settings are selected as desired. Keep in mind that application settings take priority over driver settings, which take priority over the printer control panel settings. If a single setting is not present in the application, but is set in the driver, that will override the front panel settings.

Note JetAdmin does have capabilities to override paper types and sizes and certain conditions. See the *HP LaserJet 8100, 8100 N and 8100 DN Printers User Guide* for more information.

Download Service Manual And Resetter Printer at http://printer1.blogspot.com

Clearing Paper Jams

Note Open and close all printer covers to clear the paper jam message. After removing a sheet of paper, you may need to check other areas to make sure that all paper has been removed.

All portions of a jammed piece of paper must be removed or you may run into repeated jams.

If the jam persists, try the following:

- If you have PostScript installed, use the `JAM RECOVERY=ON` menu item under the PostScript Menu. The printer will attempt to automatically recover from paper jams.
- Execute a formfeed from the computer or the printer's control panel. A formfeed may flush any paper or envelopes left in the printer.
- Check to make sure you have located and removed all scraps of paper from inside the printer.
- Use the Event Log Page and Event Log Codes to aid you in isolating where the errors are occurring.

Clearing Repeated Paper Jams

1. Check to see that media is correctly loaded in trays and that all width guides are correctly set (not skewed).
2. Try turning over the stack of paper in the tray. If you are using letterhead paper, try printing from Tray 1.
3. Do not use previously printed paper or torn, worn, or irregular paper.
4. Check the media specifications. If it is outside of the recommended specifications, problems may occur. (See the *HP LaserJet Printer Family Paper Specifications Guide.*
5. The printer may be dirty. Clean the printer as described in the first section of this chapter.
6. Check that paper loaded in Tray 1 is NOT longer than 17.7 inches (450 mm) or wider than 11.7 inches (297 mm). (These are the maximum dimensions that the printer can feed; otherwise the printer will jam.)
7. Make sure that Tray 4 and Tray 5 are set for the size of paper installed and that the tray is not overloaded with paper.

Download Service Manual And Resetter Printer at http://printer1.blogspot.com

Control Panel Messages and Errors

Be sure to read the exact text of the control panel message, including the error message number and the text, in order to locate the error message in the tables.

This printer has enhanced information in the control panel.

Printer messages displayed on the control panel provide five categories of information. Each message category is assigned a priority. If more than one condition occurs at the same time, the highest priority message is displayed. When it has been cleared, the next priority message will be displayed, and so on. The displayed messages and their priorities are:

- Printer Status
- Warning messages
- Error messages
- Critical error messages
- External Paper Handling Device Messages

Control Panel and Event Log Message Format

The format of Control Panel messages is:

- `13.xy PAPER JAM IN INPUT/OUTPUT DEVICE`
- `INPUT/OUTPUT DEVICE CONDITION xy.zz`
- `66.xy.zz INPUT/OUTPUT DEVICE FAILURE`

The Event Log messages have the following format:

- `13.xy zz INPUT/OUTPUT DEVICE PAPER JAM`
- `65.xy.zz INPUT/OUTPUT DEVICE CONDITION`
- `66.xy.zz INPUT/OUTPUT DEVICE HARDWARE MALFUNCTION`

Download Service Manual And Resetter Printer at http://printer1.blogspot.com

For both the Control Panel and Event Log messages:

- x is the C-link device number in the daisy chain.

x	Description
0	Paper Handling Controller
1	First C-link device
2	Second C-link device
3	Third C-link device
4	Fourth C-link device
5	Fifth C-link device

- y is the C-link device type.

y	Description
0	Paper Handling Controller
1	Input device
2	Output device
3	Finisher Device
4	Other supported device (not in use)
5	Other supported device (not in use)

- zz is the error code. See “Printer Message Tables” on page 408 for more information.

Note The following are two examples of Control Panel messages, the corresponding Event Log messages, and what the messages mean. These examples do not show the recommended action to follow to fix the problem. See “Printer Message Tables” on page 408 for the recommended actions for these messages.

Control Panel Message	Event Log Page	Meaning
13.11 PAPER JAM IN INPUT DEVICE	13.11 1B	A paper jam occurred in the first C-link device configured. It is an input device (2000-sheet Input Tray or 2 x 500-sheet Input Tray) with an error code 1B. This is normally a timeout at an entry or exit sensor.
66.22.09 OUTPUT DEVICE FAILURE	66.22.09	A hardware malfunction occurred in the second C-link device configured. It is an output device (Mailbox) with an error code 09. This is an external memory error.

Download Service Manual And Resetter Printer at http://printer1.blogspot.com

Note Be sure to print a configuration page to properly identify the input or output device configured. Notice that the error format only identifies the C-link device number and the device type; it does not identify which input or output device is used in the system.

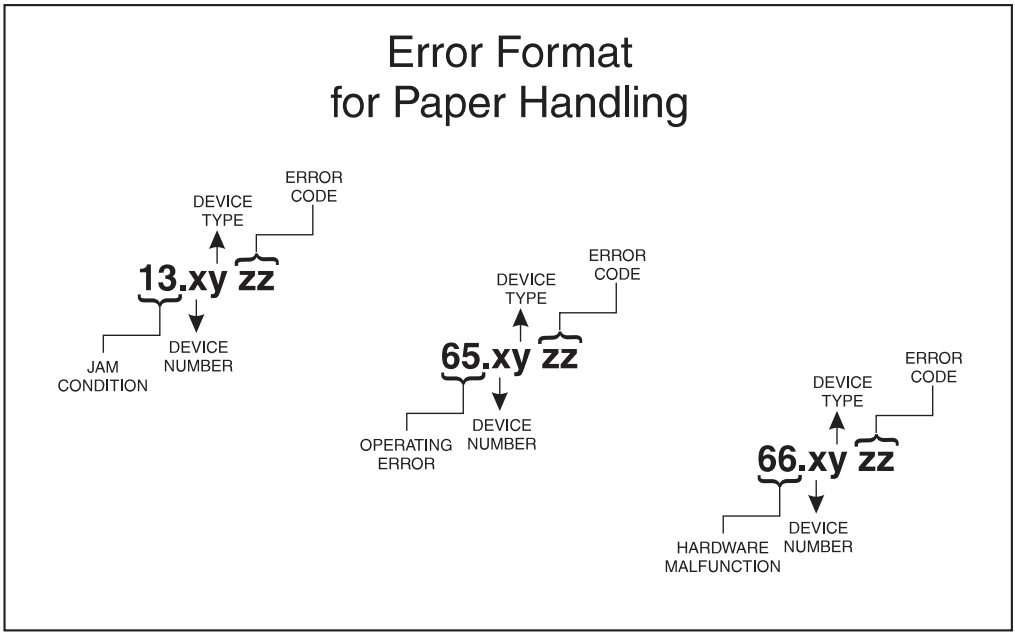

Figure 7-8 **Error Format for Paper Handling**

Download Service Manual And Resetter Printer at http://printer1.blogspot.com

Printer Message Tables

Printer messages are grouped according to the device generating the error. Within the groupings listed below, the alphabetic error messages are listed first, followed by the numeric messages.

- “Engine Error Messages” (page 409)
- “Duplexer Error Messages” (page 443)

Input Devices

- “Envelope Feeder Error Messages” (page 428)
- “2000-sheet Input Tray Error Messages” (page 421)
- “2 x 500-sheet Input Tray Error Messages” (page 425)

Output Devices

- “7-bin Tabletop Mailbox Error Messages” (page 429)
- “8-bin Mailbox Error Messages” (page 434)

- “Stapler Error Messages” (page 440)
- “Paper Handling Device Controller Messages” (page 444)

The following is an example of the format for numerical control panel messages.

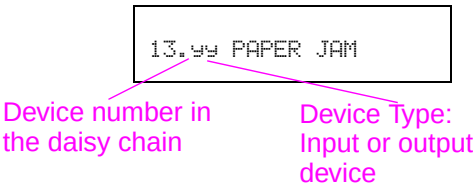

Download Service Manual And Resetter Printer at http://printer1.blogspot.com

Engine Error Messages

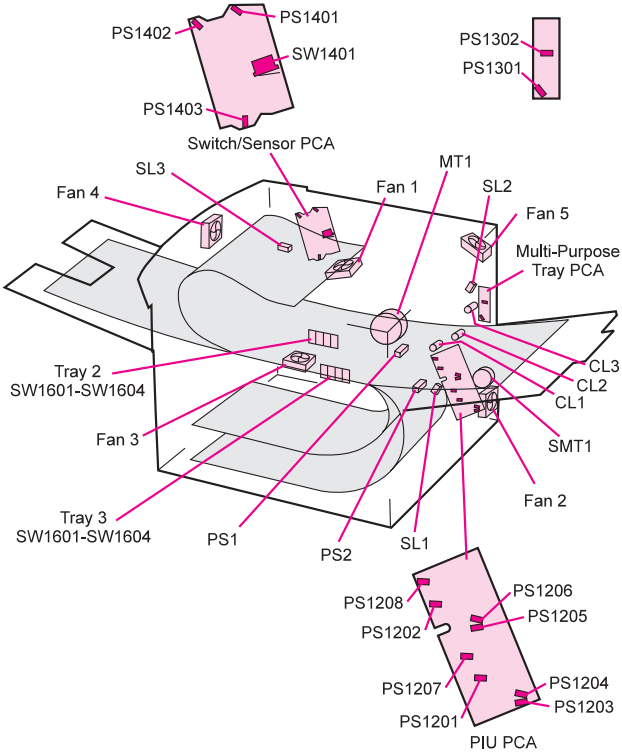

Table 7-6. Engine Error Messages

Control Panel Message	Event Log Error Message	Description	Recommended Action
13.1 PAPER JAM CHECK RIGHT DOOR	13.1 zz	Paper feed 1. Paper late jam. Paper did not reach PS2.	Use the “Paper Path Test” on page 81 to see if a problem exists from both engine trays. If PS2 is bad, it will fail when printing from Tray 2 or 3. Verify flag movement by manually inserting paper in the sensor path. Replace PS2 or the Paper Input Unit (PIU) Assembly. See “Paper Input Unit (PIU)” on page 210 for instructions.

Download Service Manual And Resetter Printer at http://printer1.blogspot.com

Table 7-6. Engine Error Messages (continued)

Control Panel Message	Event Log Error Message	Description	Recommended Action
13.3 PAPER JAM CHECK RIGHT DOOR alternates with THEN OPEN AND CLOSE TOP COVER	13.3 XX	Paper delay jam. Paper did not reach PS1 at the registration area.	1. Remove the toner cartridge, lift the green handle, and verify the sensor flag operation. 2. Make sure that the sensor is not broken. 3. Replace the registration assembly if necessary. See “Registration Assembly” on page 221 for instructions.
13.5 FUSER OUTPUT, PAPER STOPPED JAM	13.5 XX	Fuser output, paper late jam. Paper never reached PS1403 at the fusing assembly.	Remove the toner cartridge, and check the path between the registration and fusing assemblies. PS1403 on the sensor PCA may be faulty.
13.6 FUSER OUTPUT PAPER STOPPED JAM	13.6 XX	PS1402 did not sense the paper. Fuser output, paper stopped jam. Paper never exited the fusing assembly.	1. Check the fuser flag at the sensor board area. 2. Check the fuser access door. 3. Make sure that the flag is not broken. PS1403 on the sensor PCA, or the delivery exit spring gears, may be faulty.
13.9 CHECK LEFT DOOR	13.9 XX	Face-down bin paper late jam.	Paper did not arrive at PS1402 when expected. Inspect the path between the fuser and delivery assemblies. Check the diverter assembly.
13.20 PAPER JAM CHECK ...	13.20 XX	The engine could not eject a page in the printer .The front panel message (...) will indicate the sensor closest to the paper.	Remove the jam from the location indicated on the control panel.
13.A PAPER JAM CHECK LEFT DOOR	13.A XX	Paper stopped at the Face-down bin.	Check the paper path. This jam is sensed by PS1402 on the sensor PCA.
20 INSUFFICIENT MEMORY alternates with PRESS GO TO CONTINUE	Error	The printer received more data than can fit in its available memory. You might have tried to transfer too many macros, soft fonts, or complex graphics.	1. Press Go to print the transferred data (some data might be lost). 2. Simplify the print job, or install additional memory.

Download Service Manual And Resetter Printer at http://printer1.blogspot.com

Table 7-6. Engine Error Messages (continued)

Control Panel Message	Event Log Error Message	Description	Recommended Action
21 PAGE TOO COMPLEX alternates with PRESS GO TO CONTINUE	Error	The data (dense text, rules, raster or vector graphics) sent to the printer was too complex.	1. Press Go to print the transferred data. (Some data might be lost.) 2. To print the job without losing data, from the Configuration Menu in the printer control panel, set PAGE PROTECT=ON, print the job, and then return to PAGE PROTECT=AUTO. Do not leave PAGE PROTECT=ON; it might degrade performance. If this message appears often, simplify the print job.
22 EIO x BUFFER OVERFLOW alternates with PRESS GO TO CONTINUE	Error	Too much data was sent to the EIO card in the specified slot (x). An improper communications protocol may be in use.	1. Press Go to clear the message. (Data will be lost.) 2. Check the host configuration.
22 PARALLEL I/O BUFFER OVERFLOW alternates with PRESS GO TO CONTINUE	Error	Too much data was sent to the parallel port. This error can occur if the driver you are using is not IEEE-1284 compliant. For best results, use an HP driver that came with the printer.	1. Check for a loose cable connection and be sure to use a high-quality cable. (Some non-HP parallel cables might be missing pin connections or might otherwise not conform to the IEEE-1284 specification.) This error can occur if the driver you are using is not IEEE-1284 compliant. For best results, use an HP driver that came with the printer. 2. Press Go to clear the error message. (Data will be lost.)
22 SERIAL I/0 BUFFER OVERFLOW alternates with PRESS GO TO CONTINUE	Error	Too much data was sent to the serial port.	1. Make sure that the correct serial pacing option is selected from the I/O Menu in the printer's control panel. 2. Print a Menu Map, and verify that the serial pacing item (from the I/O Menu in the printer's control panel) matches the setting on the computer. 3. Press Go to clear the error message. (Data will be lost.)

Download Service Manual And Resetter Printer at http://printer1.blogspot.com

Table 7-6. Engine Error Messages (continued)

Control Panel Message	Event Log Error Message	Description	Recommended Action
40 BAD SERIAL TRANSMISSION alternates with PRESS GO TO CONTINUE	Error	The printer encountered an error while transferring data from the computer. The error might have occurred for several reasons: • The computer was powered on or off while the printer was online. • The printer's serial configuration was not the same as the computer's.	1. Verify the cable connections. Make sure that the printer's serial configuration is set the same as the computer from the I/O Menu in the printer's control panel. 2. The serial baud rate setting can be accessed from the I/O Menu in the printer's control panel. 3. Press Go to clear the error message and continue the printing. 4. Turn the printer off. 5. Reseat the EIO card, and turn the printer on.
40 EIO x BAD TRANSMISSION alternates with PRESS GO TO CONTINUE	Error	The connection has been broken between the printer and the EIO card in the specified slot.	1. Turn the printer off, and reseat the card. 2. Press Go to clear the error message and continue printing.
41.x PRINTER ERROR alternates with PRESS GO TO CONTINUE	Error	A temporary printing error occurred. X Description 1 Unknown misprint error. 2 Beam detect misprint error. 3 See error 41.3. 4 No VSYNC error. 5 Media feed error. 9 Noise VSREQ error.	Press Go. The page containing the error will automatically be reprinted. If this message persists: 1. Reseat the connections to the Laser/Scanner and the Engine Controller Board. 2. Replace the Laser/Scanner. See "Laser/Scanner Assembly" on page 204 for instructions. 3. Replace the Engine Controller Board.
41.3 UNEXPECTED PAPER SIZE	Error	The paper size you are trying to print is not the same as the control panel setting for Tray 1.	1. Make sure that the control panel setting for Tray 1 or the Envelope Feeder is correctly adjusted for size. (The printer will continue trying to print the job until the size settings are correct.) 2. Press Go. The page containing the error will automatically be reprinted. (Or, you might want to press Cancel Job to clear the job from the printer's memory.)

Download Service Manual And Resetter Printer at http://printer1.blogspot.com

Table 7-6. Engine Error Messages (continued)

Control Panel Message	Event Log Error Message	Description	Recommended Action
50.x FUSER ERROR	Critical Error	A fuser error has occurred. X Description 1 Low Fuser temperature. 2 Fuser warm up service. 3 High Fuser temperature. 4 Faulty Fuser. 5 Inconsistent Fuser.	Turn the printer off for at least 20 minutes, and then turn the printer on. If the error continues: 1. Make sure that the Fusing Assembly is installed correctly and is fully seated into its connectors (no bent pins or pins outside their receptacles). 2. Reseat or replace the fuser cable assembly. 3. Replace the DC Controller.
51.x PRINTER ERROR	Error	A temporary printing error occurred. X Description 1 Beam detect error. 2 Laser error.	1. Press Go. The page containing the error will automatically be reprinted. 2. Turn the printer off, and then turn the printer on. 3. Reseat the cables. See the wiring diagrams at the back of this manual. 4. Replace the Laser/Scanner. See “Laser/Scanner Assembly” on page 204 for instructions.
52.x PRINTER ERROR	Error	A temporary printing error occurred. X Description 0 Laser/scanner error. 1 Laser/scanner startup error. 2 Laser/scanner rotation error.	1. Press Go. The page containing the error will automatically be reprinted. 2. Turn the printer off, and then turn the printer on. 3. Reseat the cables. See the wiring diagrams at the back of this manual. 4. Replace the Laser/Scanner. See “Laser/Scanner Assembly” on page 204 for instructions.

Download Service Manual And Resetter Printer at http://printer1.blogspot.com

Table 7-6. Engine Error Messages (continued)

Control Panel Message	Event Log Error Message	Description	Recommended Action
53.xy.zz PRINTER ERROR	Critical Error	There is a problem with the printer's memory. The DIMM that caused the error will not be used. Values of x, y, and zz are as follows: x = DIMM type 0 = ROM 1 = RAM y = Device location 0 = Internal memory (ROM or RAM) 1 to 3 = DIMM slots 1, 2, or 3 zz = Error number 0 = Unsupported memory (for example, presence detect bad) 1 = Unrecognized memory for example, presence detect bad) 2 = Unsupported memory size 3 = Failed RAM test 4 = Exceeded maximum RAM size 5 = Exceeded maximum ROM size 6 = Invalid DIMM speed 7 = DIMM reporting information incorrectly 8 = DIMM RAM parity error 9 = ROM needs to be mapped to an unsupported address 10 = DIMM address conflict 11 = PDC XROM out of bounds 12 = Unable to make a temporary mapping	1. Turn the printer off, and reseat or replace the specified DIMM. 2. Try the DIMM in another slot. 3. Replace the DIMM that caused the error.

Download Service Manual And Resetter Printer at http://printer1.blogspot.com

Table 7-6. Engine Error Messages (continued)

Control Panel Message	Event Log Error Message	Description	Recommended Action
55.x PRINTER ERROR alternates with PRESS GO TO CONTINUE	Error	A printer error has occurred. X Description 0 NO_RESET_REPORT 1 NO_ENGINE_RESPONSE 2 EXCESSIVE_GLITCHES 3 LOST_PPRDY_SIGNAL 4 COMMUNICATION_TIMEOUT 5 BAD_TRAY_BIN_REPORTS 6 ECC7_COMMAND_ERROR 7 INCOMING_PARITY_ERROR 8 OUTGOING_PARITY_ERROR 9 MISSED_INTERRUPT A HUNG_COMMUNICATIONS B LOST_XISR_ERROR C INVALID_BUS_TIMEOUT D VERY_LATE_ECOMM_ISR	Press Go to clear the error message.
56.x PRINTER ERROR alternates with CYCLE POWER TO CONTINUE	Error	A temporary printing error occurred. X Description 1 Illegal input. 2 Illegal output.	1. Press Go. The page containing the error will automatically be reprinted. 2. Turn the printer off, and then turn the printer on. 3. Check the printer's configuration.
57.X FAN FAILURE	Critical Error	A fan motor failure occurred. All fans are enabled to low speed operation at power on. Fans will go into high speed operation during the print cycle. X Description 2 Fan 3 - Formatter Fan (intake) 3 Fan 2 - Laser/scanner (exhaust) 5 Fan 1 -Low-voltage power supply (exhaust) 6 Fan 4 - Face-down delivery (exhaust) 9 Fan 5 - Tray 1 fan	Turn the printer off, and then turn the printer on. If the message continues, check and reseat the cabling between the fan motors and the DC Controller PCA.
58.x PRINTER ERROR alternates with CYCLE POWER TO CONTINUE	Error	A temporary printing error occurred. X Description 1 Tray 1 lifter malfunction. 2 Tray 2 lifter malfunction. 3 Tray 3 lifter malfunction. 4 Tray 4 lifter malfunction. X Tray X lifter malfunction.	Turn the printer off, and then turn the printer on.

Download Service Manual And Resetter Printer at http://printer1.blogspot.com

Table 7-6. Engine Error Messages (continued)

Control Panel Message	Event Log Error Message	Description	Recommended Action
59.x PRINTER ERROR	Critical Error	A printer error has occurred. X Description 0 Motor error. 1 Motor startup error. 2 Motor rotation error.	Turn the printer off, and then turn the printer on.
62.x PRINTER ERROR	Critical Error	There is a problem with the printer's memory. The x value refers to the location of the problem: 0 = Internal memory 1 to 3 = DIMM slots 1, 2, or 3	Reseat or replace the specified DIMM.
64 PRINTER ERROR	Critical Error	A scan buffer error occurred.	Turn the printer off, and then turn the printer on. If this message persists, replace the Formatter.
68 NVRAM ERROR CHECK SETTINGS	Error	An error occurred in the printer's nonvolatile memory (NVRAM) and one or more printer settings has been reset to its factory default.	1. Print a configuration page and check the printer settings to determine which values have changed. 2. Remove EIO card. It will be reset if not removed. 3. Hold down CANCEL JOB while turning the printer on. This will clean up the NVRAM by removing old areas that are not being used.
68 NVRAM FULL CHECK SETTINGS	Error	The printer's nonvolatile memory (NVRAM) is full. Some settings might have been reset to the factory defaults.	1. Print a configuration page and check the printer settings to determine which values have changed. 2. Remove EIO card. It will be reset if not removed. 3. Hold down CANCEL JOB while turning the printer on. This will clean up the NVRAM by removing old areas that are not being used.
69.x PRINTER ERROR	Critical Error	A temporary printing error occurred. X Description 0 The duplex mechanism has failed. 1 The duplex slide adjust has failed.	1. Turn the printer off, and then turn the printer on. 2. Reseat the duplexer.

Download Service Manual And Resetter Printer at http://printer1.blogspot.com

Table 7-6. Engine Error Messages (continued)

Control Panel Message	Event Log Error Message	Description	Recommended Action
79.xxxx PRINTER ERROR	Critical Error	The printer detected an error. The numbers (xxxx) indicate the specific type of error.	1. Turn the printer off, and then turn the printer on. 2. Try printing a job from a different software application. If the job prints, go back to the first application and try printing a different file. (If the message only appears with a certain software application or print job, contact the software vendor for assistance.) If the message persists, try the following: 1. Cycle power. 2. Reseat or replace the interface cable and cycle power. 3. Remove the DIMMs one at a time and cycle power. 4. Try using the parallel interface, if possible. 5. With the EIO cards removed from the printer, perform a cold reset. 6. Remove the Hard Disk and cycle power. 7. If the error persists, replace the Formatter.
8X.YYYY EIO ERROR	Critical Error	The EIO accessory card in slot X has encountered a critical error as specified by YYYY.	1. Move the EIO card to another slot. 2. If the error persists, replace the EIO card. 3. If the error is corrected, reseat the EIO card in the original slot.
BAD OPT TRAY CONNECTION	Error	The optional tray is not connected properly.	1. Re-install the optional tray. 2. Make sure the optional tray is connected and the connector is not damaged. 3. Replace the optional tray.
CHECK INPUT DEVICE alternates with PAPER PATH OPEN PLEASE CLOSE IT	Error	The optional input tray cannot feed paper to the printer because a door or paper guide is open.	Check the doors and paper guides.

Download Service Manual And Resetter Printer at http://printer1.blogspot.com

Table 7-6. Engine Error Messages (continued)

Control Panel Message	Event Log Error Message	Description	Recommended Action
CHECK OUTPUT DEVICE alternates with CLOSE OUTPUT DELIVERY PATH	Error	The paper path between the printer and the external paper handling output device is open and must be closed before printing can continue.	Close the paper path.
EXTERNAL DEVICE INITIALIZING	Status	When an external paper handling device is connected to the printer, it must have 10 seconds to initialize after boot or after coming out of PowerSave mode.	No action required.
MANUALLY FEED [SIZE]	Error	Tray 1 does not contain the specified size paper.	Load the specified type of paper into Tray 1.
MANUALLY FEED [TYPE] [SIZE]	Error	One of the following occurred: • A manual feed was requested. • There is no paper in Tray 1. • The wrong size paper is loaded. • The control panel is not set for the kind of paper loaded.	1. Load the requested paper into Tray 1. 2. Press GO if the desired paper is already loaded in Tray 1. 3. Press - VALUE + to scroll through the available types and sizes. 4. Press SELECT to accept the alternate type or size.
MANUALLY FEED [TYPE] ENV	Error	Tray 1 does not contain the specified type of envelope.	Load the specified type of envelope into Tray 1.
MANUALLY FEED TRAY 1 ENVELOPE	Error	Tray 1 does not contain an envelope.	Load an envelope into Tray 1.
OUTPUT BIN FULL alternates with CLEAR PAPER FROM [BINNAME]	Error	The output bin is full and needs to be emptied.	1. Remove the media from the Face-down bin. 2. Make sure that the sensor flag moves freely.
TRAY X CONTAINS UNKNOWN MEDIA	Warning	The media type in the specified tray cannot be determined.	Load known media, or set the correct media type.

Download Service Manual And Resetter Printer at http://printer1.blogspot.com

Table 7-6. Engine Error Messages (continued)

Control Panel Message	Event Log Error Message	Description	Recommended Action
TRAY X EMPTY	Warning	The paper tray is empty. Paper is sensed in the tray by black plastic flags and photosensors. If paper is not in a tray, the flags will rotate through an access in the upper tray. When paper is present, the flags are blocked from rotating through this access.	1. Load the empty tray (x) to clear the message. If you do not load the specified tray, the printer will continue printing from the next available tray, and the message will continue to display. 2. Make sure that the paper out flag is not stuck in the down position by rough media. Do this before opening the tray. To check this flag without opening Tray 2, remove the Duplexer if it is present. 3. Open the Front Access Door. This provides you with a clear view of the Tray 2 paper out sensor flag. To check this flag without opening Tray 3, use a flashlight to observe the paper out flag. If either paper flag is damaged, replace the paper flag or the paper input tray. If the printer is using Tray 2 or 3 and the message is accompanied by a clicking noise every few seconds, replace the Paper Input Unit Assembly. See “Paper Input Unit (PIU)” on page 210 for instructions.
TRAY X LIFTING	Error	Displays when tray X is in the process of lifting the paper to the top of the tray for proper feeding.	1. If the message does not go away, verify that the media can be pulled from another tray. 2. The Paper Input Unit may need to be replaced. See “Paper Input Unit (PIU)” on page 210 for instructions.
TRAY XX LOAD [SIZE]	Error	Tray X does not contain the specified size of paper.	Load the specified size of paper into Tray X.
TRAY XX LOAD [SIZE]	Error	Tray X does not contain the specified size of paper.	Load the requested paper into the indicated tray, or press SELECT to override the message and to print on a loaded paper size.

Download Service Manual And Resetter Printer at http://printer1.blogspot.com

Table 7-6. Engine Error Messages (continued)

Control Panel Message	Event Log Error Message	Description	Recommended Action
TRAY xx LOAD [TYPE] [SIZE]	Error	One of the following occurred: • There is no paper loaded in the specified tray, or the paper is not the size requested, or the control panel is not set for the size of paper loaded. • The tray is not properly adjusted for size. • The default paper size is set incorrectly. • If this message appears and the tray contains the correct size of paper, a sensor could be damaged or a paper sensor lever could be stuck.	1. Load the requested paper into the specified tray (x). Make sure that the trays are correctly adjusted for size. The tray type settings (and size for Tray 1) must be set from the printer's control panel. If you are trying to print A4 or letter size paper and this message appears, make sure that the default paper size is set correctly from the Printing Menu in the printer's control panel. 2. Press GO to print from the next available tray. 3. Press - VALUE + to scroll through the available types and sizes. 4. Press SELECT to accept the alternate type or size. 5. Inspect the switches in the tray. 6. Turn the printer on with the tray removed and push the switches by hand to see if they register.
TRAY X OPEN	Warning	The specified tray is open.	Close the tray to continue.
UNSUPPORTED SIZE IN TRAY [YY]	Error	An external paper handling device detected an unsupported paper size. The printer will go offline until the condition is corrected.	Load a supported paper size in the tray.
USE [TYPE] [SIZE] INSTEAD?	Error	If the requested paper size or type is not available, the printer asks if it should use another paper size or type instead.	1. Press - VALUE + to scroll through the available types and sizes. 2. Press SELECT to accept the alternate type or size.

Download Service Manual And Resetter Printer at http://printer1.blogspot.com

2000-sheet Input Tray Error Messages

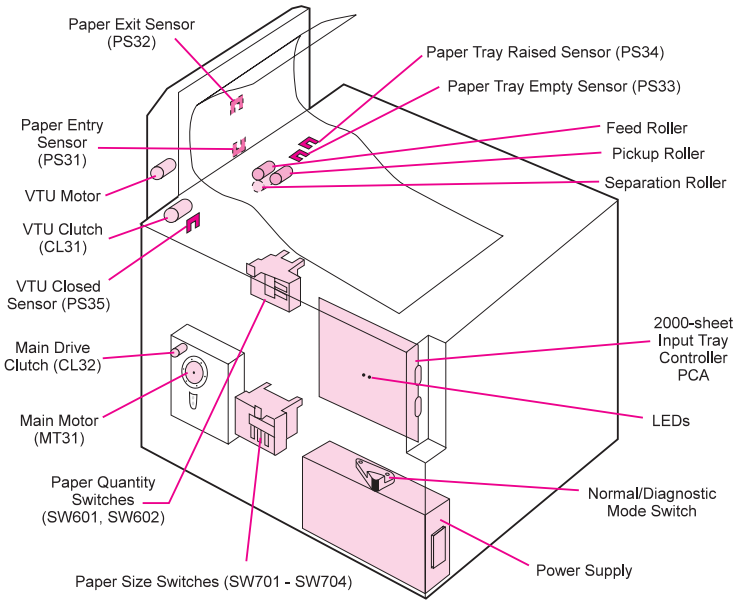

Table 7-7. 2000-sheet Input Tray Error Messages

Control Panel Message	Event Log Error Message	Description	Recommended Action
Input Device Condition 11.01	65.11.01	The detected tray is not consistent with the paper size specified by the Paper Handling Controller.	1. Make sure the size, source, and type of paper selected from the software configuration is correct. 2. Pull out Tray 4 to verify that the size and type of paper loaded matches to the size and type specified in the software configuration.

Download Service Manual And Resetter Printer at http://printer1.blogspot.com

Table 7-7. 2000-sheet Input Tray Error Messages (continued)

Control Panel Message	Event Log Error Message	Description	Recommended Action
13.11 PAPER JAM IN INPUT DEVICE	13.11 11	Timeout at Entry sensor (PS31) on the 2000-sheet Input Tray	1. Open the Vertical Transfer Unit (VTU) and remove media. 2. Make sure that the ENTRY Sensor (PS31) can move freely. 3. Make sure that the three feed, separation, and pickup rollers are properly seated. 4. If the problem persists, open the VTU and override its Open/ Close Door Sensor (PS35), perform a Paper Path Test feeding from the 2000-sheet Input Tray, and make sure the feed rollers are advancing the paper. If rollers do not rotate, verify the connections at the Pickup Assembly and the Controller PCA in the input device. 5. If the rollers rotate and drop down, but do not advance the paper, replace the feed and separation rollers using the maintenance kit. 6. If the rollers do not rotate or do not drop down, replace the Pickup Assembly. 7. If the problem persists, replace the Vertical Transfer Unit (VTU) where sensor (PS31) is located.
	13.11 1B	Timeout at Exit sensor (PS32) on the 2000-sheet Input Tray.	
	13.11 21	Page stays longer at Entry sensor (PS31) on the 2000-sheet Input Tray.	
	13.11 2B	Page stays longer at Exit sensor (PS32) on the 2000-sheet Input Tray.	
13.11 PAPER JAM IN INPUT DEVICE	13.11 31	At power on, Entry sensor (PS31) at the VTU is active.	1. Open the Vertical Transfer Unit (VTU) and remove media. 2. Verify that sensor (PS31 and PS32) moves freely. 3. If any of the sensors (PS31 or PS32) are damaged, replace the Vertical Transfer Unit (VTU).
13.11 PAPER JAM IN INPUT DEVICE	13.11 3B	At power on, Exit sensor (PS32) at the VTU is active.	1. Open the Vertical Transfer Unit (VTU) and remove media. 2. Verify that sensor (PS31 and PS32) moves freely. 3. If any of the sensors (PS31 or PS32) are damaged, replace the Vertical Transfer Unit (VTU).

Download Service Manual And Resetter Printer at http://printer1.blogspot.com

Table 7-7. 2000-sheet Input Tray Error Messages (continued)

Control Panel Message	Event Log Error Message	Description	Recommended Action
66.11.01 INPUT DEVICE FAILURE	66.11.01	Lifting motor malfunction.	1. Make sure there are no objects or fragments of paper in the free area at the 2000-sheet Input Tray (Tray 4). 2. Make sure that the lifting plate lifts up freely by hand. 3. Make sure that the paper size plates are installed correctly, and that they are not bent. 4. Replace the Paper Deck Drive Assembly's Bushing, if broken. 5. Replace the Paper Deck Drive Assembly. 6. Replace the 2000-sheet Input Tray's (Tray 4) paper tray.
66.11.02 INPUT DEVICE FAILURE	66.11.02	Feed motor malfunction.	1. Make sure there are no objects or fragments of paper in the free area at the 2000-sheet Input Tray (Tray 4). 2. Check Paper Tray Raised Sensor (PS34) that is working properly (perform a sensor test). 3. Check for proper installation of the Pick up roller. 4. Check the Pickup assembly and Paper Deck Drive Assembly cabling. 5. Replace the Pickup assembly or the Paper Deck Drive Assembly. if necessary.

Download Service Manual And Resetter Printer at http://printer1.blogspot.com

Table 7-7. 2000-sheet Input Tray Error Messages (continued)

Control Panel Message	Event Log Error Message	Description	Recommended Action
66.11.03 INPUT DEVICE FAILURE	66.11.03	Lifting and feed motor malfunction.	1. Make sure there are no objects or fragments of paper in the free area at the 2000-sheet Input Tray (Tray 4). 2. Make sure that the lifting plate lifts up freely by hand. 3. Make sure that the paper size plates are installed correctly, and they are not bent. 4. Check for broken Paper Deck Drive Assembly's Bushing, if so replace it. 5. Replace the Paper Deck Drive Assembly. 6. Check Paper Tray Raised Sensor (PS34) is working properly (perform a sensor test). 7. Check for proper installation of the Pickup roller. 8. Check Pickup Assembly cabling. 9. Replace the Pickup Assembly.

Download Service Manual And Resetter Printer at http://printer1.blogspot.com

2 x 500-sheet Input Tray Error Messages

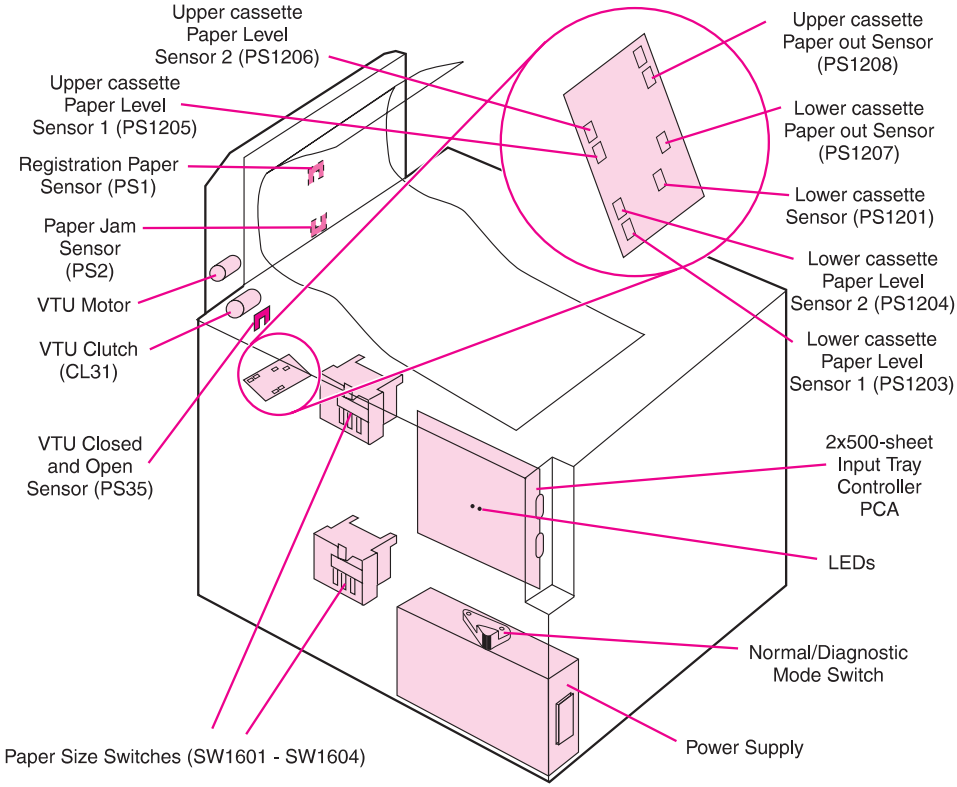

Table 7-8. 2 x 500-sheet Input Tray Error Messages

Control Panel Message	Event Log Error Message	Description	Recommended Action
Input Device Condition 11.01	65.11.01	The detected tray is not consistent with the paper size specified by Paper Handling Controller.	1. Make sure the size, source, and type of paper selected from the software configuration is correct. 2. Pull out tray 4 or 5 to verify that the size and type of paper loaded matches to the size and type specified in the software configuration.

Download Service Manual And Resetter Printer at http://printer1.blogspot.com

Table 7-8. 2 x 500-sheet Input Tray Error Messages (continued)

Control Panel Message	Event Log Error Message	Description	Recommended Action
Input Device Condition 11.04	65.11.04	Lifter malfunction.	1. Make sure that the lifting plate lifts up freely by hand. 2. Make sure that the paper size plate is installed correctly, and is not bent or broken. 3. Replace the Paper Deck Drive Assembly's Bushing, if broken. 4. Replace the Paper Deck Drive Assembly. 5. Replace the 2 x 500-sheet Input Tray's corresponding paper tray.
Input Device Condition 11.06	65.11.06	Requested to feed more than 4 pages at a time.	1. Check for proper installation of the Pickup roller. 2. Check the Pickup assembly and the Paper Deck Drive Assembly cabling. 3. Replace the Pickup assembly or the Paper Deck Drive Assembly. if necessary.

Download Service Manual And Resetter Printer at http://printer1.blogspot.com

Table 7-8. 2 x 500-sheet Input Tray Error Messages (continued)

Control Panel Message	Event Log Error Message	Description	Recommended Action
13.11 PAPER JAM IN INPUT DEVICE	13.11 11	Page did not arrive at entry sensor.	1. Open the Vertical Transfer Unit (VTU) and remove media. 2. Make sure that the ENTRY Sensor (PS1) can move freely. 3. Make sure that the three feed, separation, and pickup rollers are properly seated. 4. If the problem persists, open the VTU and override its Open/ Close Door Sensor (PS35), perform a Paper Path Test feeding from the 2 x 500-sheet Input Tray, and make sure the feed rollers are advancing the paper. If rollers do not rotate, verify the connections at the Pickup Assembly and the Controller PCA in the input device. 5. If the rollers rotate and drop down, but do not advance the paper, replace the feed and separation rollers using the maintenance kit. 6. If the rollers do not rotate or do not drop down, replace the Pickup Assembly. 7. If the problem persists, Replace the Vertical Transfer Unit (VTU) where sensor (PS31) is located.
	13.11 1B	Page did not arrive to exit sensor.	
	13.11 21	Page stays longer at entry sensor.	
	13.11 2B	Page stays longer at exit sensor.	
13.11 PAPER JAM IN INPUT DEVICE	13.11 31	At power on, entry sensor is active.	1. Open the Vertical Transfer Unit (VTU) and remove media. 2. Verify that sensor (PS1 and PS2) moves freely. 3. If any of the sensors (PS1 or PS2) are damaged, replace the Vertical Transfer Unit (VTU).
13.11 PAPER JAM IN INPUT DEVICE	13.11 3B	At power on, exit sensor is active.	1. Open the Vertical Transfer Unit (VTU) and remove media. 2. Verify that sensor (PS1 and PS2) moves freely. 3. If any of the sensors (PS1 or PS2) are damaged, replace the Vertical Transfer Unit (VTU).

Download Service Manual And Resetter Printer at http://printer1.blogspot.com

Envelope Feeder Error Messages

Table 7-9. Envelope Feeder Error Messages

Control Panel Message	Event Log Error Message	Description	Recommended Action
ENVELOPE FEEDER EMPTY	Warning	The envelope feeder is empty. Printing of the current job is not interrupted.	Refill the envelope feeder.
ENV FEEDER LOAD [SIZE]	Error	The envelope feeder does not have the requested paper.	Put the requested paper into the envelope feeder.
ENV FEEDER LOAD [TYPE] [SIZE]	Error	There is no envelope in the feeder, the wrong size is loaded in the feeder, or the type and size is set incorrectly in the control panel.	1. Load the requested envelope type and size into the envelope feeder. 2. Make sure that the envelope size and type are set correctly from the Paper Handling Menu in the printer's control panel. 3. Press GO if the desired envelope is already loaded in the feeder. 4. Press - VALUE + to scroll through the available types and sizes. 5. Press SELECT to accept the alternate type or size.
WRONG ENVELOPE FEEDER INSTALLED	Error	The envelope feeder you are trying to install will not work for this printer.	Install the correct envelope feeder.

Download Service Manual And Resetter Printer at http://printer1.blogspot.com

7-bin Tabletop Mailbox Error Messages

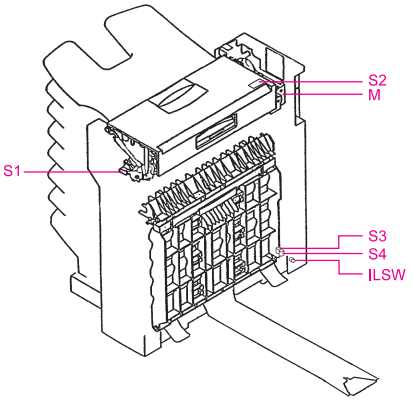

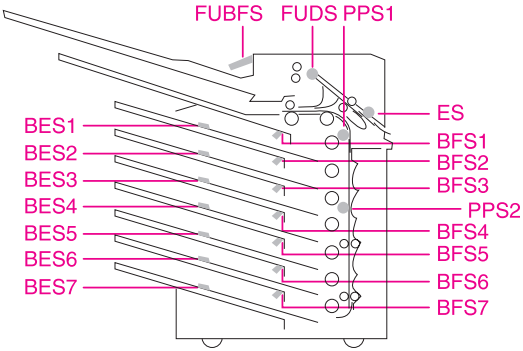

Table 7-10. 7-bin Tabletop Mailbox Error Messages

Control Panel Message	Event Log Error Message	Description	Recommended Action
13.12 or 13.22 PAPER JAM IN OUTPUT DEVICE	13.12 01 or 13.22 01	Unexpected page at (ES) Entry Sensor.	1. Open the Top Cover and remove any jammed paper. 2. Make sure that the Entry Sensor (ES) moves freely. 3. Perform a sensor test to make sure that the Entry Sensor (ES) is working properly. 4. If a problem persists, replace the 7-bin Tabletop Mailbox controller PCA. 5. Replace the sensors PCA.
	13.12.11 or 13.22.11	Page did not reach the Entry Sensor (ES) on time.	1. Open the Top Cover and remove any jammed paper. 2. Make sure that the Entry Sensor (ES) moves freely. 3. Perform a sensor test to make sure that the Entry Sensor (ES) is working properly. 4. If the problem persists, replace the 7-bin Tabletop Mailbox controller PCA. 5. Replace the sensors PCA.

Download Service Manual And Resetter Printer at http://printer1.blogspot.com

Table 7-10. 7-bin Tabletop Mailbox Error Messages (continued)

Control Panel Message	Event Log Error Message	Description	Recommended Action
13.12 or 13.22 PAPER JAM IN OUTPUT DEVICE	13.12 12 or 13.22 12	Page did not reach the Paper Path Sensor 1 (PPS1) on time.	1. Open the Paper Path Cover and remove any jammed paper. 2. Make sure that the Paper Path Sensor 1 (PPS1) moves freely. 3. Perform a sensor test to make sure that the Paper Path Sensor 1(PPS1) is working properly. 4. Replace the sensors PCA. 5. If the problem persists, replace the 7-bin Tabletop Mailbox controller PCA.
	13.12 15 or 13.22 15	Page did not reach the Paper Path Sensor 2 (PPS2) on time.	1. Open the Paper Path Cover and remove any jammed paper. 2. Make sure that the Paper Path Sensor 2 (PPS2) moves freely. 3. Perform a sensor test to make sure that the Paper Path Sensor 2 (PPS2) is working properly. 4. Replace the sensors PCA. 5. If the problem persists, replace the 7-bin Tabletop Mailbox controller PCA.
	13.12 17 or 13.22 17	Page did not reach the Face-up Delivery Sensor (FUDS) on time.	1. Open the Top Cover and remove any jammed paper. 2. Make sure that the Face-up Delivery Sensor (FUDS) moves freely. 3. Perform a sensor test to make sure that the Entry Sensor (FUDS) is working properly. 4. If the problem persists, replace the 7-bin Tabletop Mailbox controller PCA. 5. Replace the sensors PCA.
	13.12 21 or 13.22 21	Page stays at Entry Sensor (ES).	1. Open the Top Cover and remove any jammed paper. 2. Make sure that the Entry Sensor (ES) moves freely. 3. Perform a sensor test to make sure that the Entry Sensor (ES) is working properly. 4. If the problem persists, replace the 7-bin Tabletop Mailbox controller PCA. 5. Replace the sensors PCA.

Download Service Manual And Resetter Printer at http://printer1.blogspot.com

Table 7-10. 7-bin Tabletop Mailbox Error Messages (continued)

Control Panel Message	Event Log Error Message	Description	Recommended Action
13.12 or 13.22 PAPER JAM IN OUTPUT DEVICE	13.12 22 or 13.22 22	Page stays at Paper Path Sensor 1 (PPS1).	1. Open the Paper Path Cover and remove any jammed paper. 2. Make sure that the Paper Path Sensor 1 (PPS1) moves freely. 3. Perform a sensor test to make sure that the Paper Path Sensor 1(PPS1) is working properly. 4. Replace the sensors PCA 5. If the problem persists, replace the 7-bin Tabletop Mailbox controller PCA.
	13.12 25 or 13.22 25	Page stays at Paper Path Sensor 2 (PPS2).	1. Open the Paper Path Cover and remove any jammed paper. 2. Make sure that the Paper Path Sensor 2 (PPS2) moves freely. 3. Perform a sensor test to make sure that the Paper Path Sensor 2 (PPS2) is working properly. 4. Replace the sensors PCA. 5. If the problem persists, replace the 7-bin Tabletop Mailbox controller PCA.
	13.12 27 or 13.22 27	Page stays at Face-up Delivery Sensor (FUDS).	1. Open the Top Cover and remove any jammed paper. 2. Make sure that the Face-up Delivery Sensor (FUDS) moves freely. 3. Perform a sensor test to make sure that the Entry Sensor (FUDS) is working properly. 4. If the problem persists, replace the 7-bin Tabletop Mailbox controller PCA. 5. Replace the sensors PCA.
	13.12 31 or 13.22 31	Page found at Entry Sensor (ES) during power on sequence.	1. Open the Top Cover and remove any jammed paper. 2. Make sure that the Entry Sensor (ES) moves freely. 3. Perform a sensor test to make sure that the Entry Sensor (ES) is working properly. 4. If the problem persists, replace the 7-bin Tabletop Mailbox controller PCA. 5. Replace the sensors PCA.

Download Service Manual And Resetter Printer at http://printer1.blogspot.com

Table 7-10. 7-bin Tabletop Mailbox Error Messages (continued)

Control Panel Message	Event Log Error Message	Description	Recommended Action
13.12 or 13.22 PAPER JAM IN OUTPUT DEVICE	13.12 32 or 13.22 32	Page found at Paper Path Sensor 1 (PPS1) during power on sequence.	1. Open the Paper Path Cover and remove any jammed paper. 2. Make sure that the Paper Path Sensor 1 (PPS1) moves freely. 3. Perform a sensor test to make sure that the Paper Path Sensor 1(PPS1) is working properly. 4. Replace the sensors PCA. 5. If the problem persists, replace the 7-bin Tabletop Mailbox controller PCA.
	13.12 35 or 13.22 35	Page found at Paper Path Sensor 2 (PPS2) during power on sequence.	1. Open the Paper Path Cover and remove any jammed paper. 2. Make sure that the Paper Path Sensor 2 (PPS2) moves freely. 3. Perform a sensor test to make sure that the Paper Path Sensor 2 (PPS2) is working properly. 4. Replace the sensors PCA. 5. If the problem persists, replace the 7-bin Tabletop Mailbox controller PCA.
	13.12 37 or 13.22 37	Page found at Face-up Delivery Sensor (FUDS) during power on sequence.	1. Open the Top Cover and remove any jammed paper. 2. Make sure that the Face-up Delivery Sensor (FUDS) moves freely. 3. Perform a sensor test to make sure that the Entry Sensor (FUDS) is working properly. 4. If the problem persists, replace the 7-bin Tabletop Mailbox controller PCA. 5. Replace the sensors PCA.
66.12.16 or 66.22.16 OUTPUT DEVICE FAILURE	66.12 16 or 66.22.16	Solenoid Malfunction.	1. Check that the 2 parallel black bars that are connected to the Diverter Solenoids (S3 and S4) have free movement. 2. Check for proper installation of the C-link cables. 3. Replace the C-link cables. 4. Replace the 7-bin Tabletop Mailbox controller PCA.

Download Service Manual And Resetter Printer at http://printer1.blogspot.com

Table 7-10. 7-bin Tabletop Mailbox Error Messages (continued)

Control Panel Message	Event Log Error Message	Description	Recommended Action
66.12.32 or 66.22.32 OUTPUT DEVICE FAILURE	66.12 32 or 66.22.32	Solenoid Malfunction.	1. Check that the 2 parallel black bars that are connected to the Diverter Solenoids (S3 and S4) have free movement. 2. Check for proper installation of the C-link cables. 3. Replace the C-link cables. 4. Replace the 7-bin Tabletop Mailbox controller PCA.

Download Service Manual And Resetter Printer at http://printer1.blogspot.com

8-bin Mailbox Error Messages

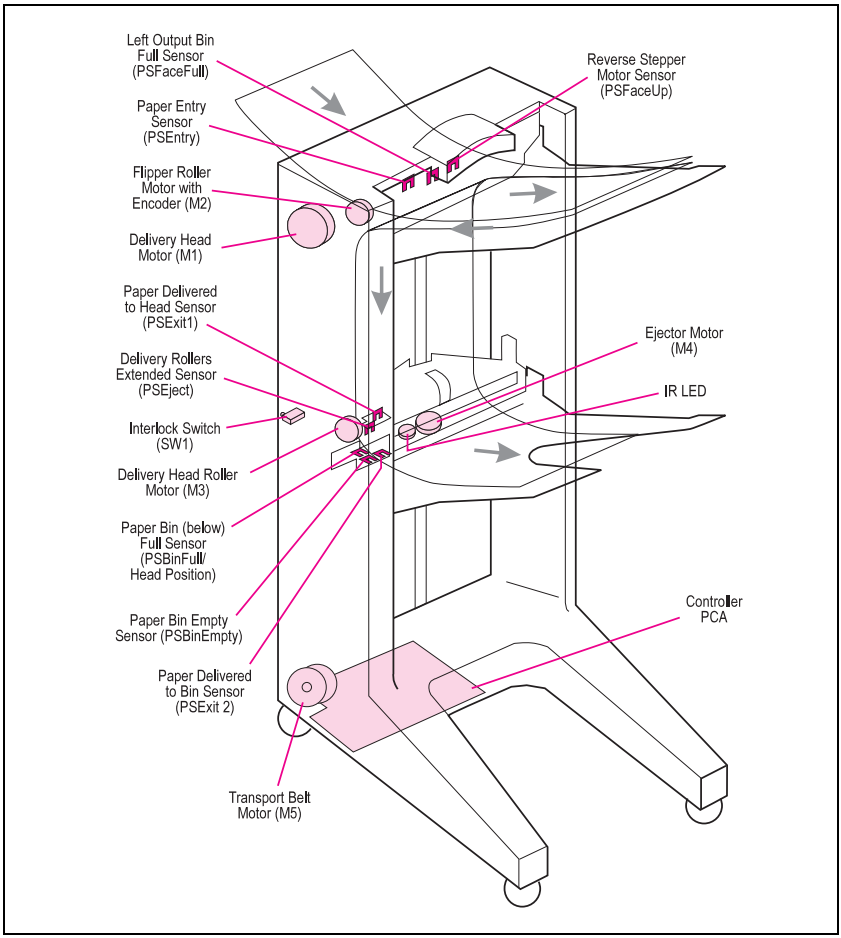

Table 7-11. 8-bin Mailbox Error Messages

Control Panel Message	Event Log Error Message	Description	Recommended Action
22.1 or 12.1 OUTPUT DEVICE CONDITION	65.22.01 or 65.12.01	The Face-up Bin is too full.	1. Empty the Face-up Bin. 2. Check that sensor flag moves freely. (PSFaceFull.) 3. Check for proper cable connection in flipper area. 4. If the problem persists, replace the Flipper assembly.

Download Service Manual And Resetter Printer at http://printer1.blogspot.com

Table 7-11. 8-bin Mailbox Error Messages (continued)

Control Panel Message	Event Log Error Message	Description	Recommended Action
OUTPUT DEVICE CONDITION 22.2 or 12.2	65.22.02 or 65.12.02	Elevator Problem (Home not Found).	1. Check that the blind cover or scan bar is installed properly. 2. Check for jammed paper in the delivery head assembly. 3. Check for free movement of the delivery head assembly. 4. Check that all paper bins are seated correctly. 5. Check that paper bins or the blind cover are not broken. 6. Replace the delivery head motor. 7. Replace the MBM controller PCA. 8. Replace the delivery head assembly.
OUTPUT DEVICE CONDITION 22.3 or 12.3	65.22.03 or 65.12.03	Elevator Problem Scanning bins Error.	1. Check that the blind cover or scan bar is installed properly. 2. Check for jammed paper in the delivery head assembly. 3. Check for free movement of the delivery head assembly. 4. Check that all paper bins are seated correctly. 5. Check that there is no paper bin or blind cover broken. 6. If the error message persists, replace the delivery head motor (M1), the MBM controller PCA, or the Delivery Head Assembly.
OUTPUT DEVICE CONDITION 22.4 or 12.4	65.22.04 or 65.12.04	Slider Jam in the head assembly.	1. Perform a paper path test. 2. Check for damaged sensor (PSExit 1) or (PSExit 2) in the delivery head assembly. 3. Check fingers in the head assembly, they must be over the ejector rollers. 4. Replace the Head Assembly.

Download Service Manual And Resetter Printer at http://printer1.blogspot.com

Table 7-11. 8-bin Mailbox Error Messages (continued)

Control Panel Message	Event Log Error Message	Description	Recommended Action
13.22 or 13.12 PAPER JAM IN OUTPUT DEVICE	13.22 01 or 13.12 01	Flipper Entry Sensor (PSEntry) Jam.	1. Open the Jam Access Door and remove any jammed paper. 2. Make sure that the Full Bin Sensor Flag (PSFaceFull) moves freely. 3. Make sure that the Flipper's shaft is not out of place. 4. If the problem persists, replace Flipper Assembly. 5. Replace the MBM Controller PCA.
	13.22 02 or 13.12 02	Flipper Face-up Sensor (PSFaceup) Jam.	1. Open the Jam Access Door and remove any jammed paper. 2. Make sure that the Full Bin Sensor Flag (PSFaceFull) moves freely. 3. Make sure that the Flipper's shaft is not out of place. 4. If the problem persists, replace the Flipper Assembly. 5. Replace the MBM Controller PCA.
	13.22 03 or 13.12 03	Belt Jam (Transport Belt Motor (M5) stop for an unexpected reason).	1. Check for jammed paper at the double-belt system and Delivery Head Assembly. 2. Ensure free movement of the double belt (both belts). 3. Ensure parallel position of the double belt system. 4. Check that the Metal Tape is in place and in good condition. 5. Replace the Transport Belt Motor (M5). 6. Replace the MBM Controller PCA. 7. Replace the Delivery Head Assembly.

Download Service Manual And Resetter Printer at http://printer1.blogspot.com

Table 7-11. 8-bin Mailbox Error Messages (continued)

Control Panel Message	Event Log Error Message	Description	Recommended Action
13.22 or 13.12 PAPER JAM IN OUTPUT DEVICE	13.22 04 or 13.12 04	Jam in Head Assembly at (PSExit 1).	1. Check for jammed paper in the Delivery Head Assembly. 2. Ensure free movement in (PSExit 1) sensor flags on the delivery head assembly. 3. Check the delivery roller's fingers. They must be over the ejector rollers on the delivery head assembly. 4. Replace the flat ribbon cable that connects to the delivery head assembly to the controller PCA. 5. Replace the MBM Controller PCA. 6. Replace Delivery Head Assembly.
13.22 or 13.12 PAPER JAM IN OUTPUT DEVICE	13.22 05 or 12.12 05	Jam in Head Assembly at (PSExit 2).	1. Check for jammed paper in the Delivery Head Assembly. 2. Ensure free movement in (PSExit 2) sensor flags on the delivery head assembly. 3. Check the delivery roller's fingers. They must be over the ejector rollers on the delivery head assembly. 4. Replace the flat ribbon cable that connects to the delivery head assembly to the controller PCA. 5. Replace the MBM Controller PCA. 6. Replace Delivery Head Assembly.

Download Service Manual And Resetter Printer at http://printer1.blogspot.com

Table 7-11. 8-bin Mailbox Error Messages (continued)

Control Panel Message	Event Log Error Message	Description	Recommended Action
13.22 or 13.12 PAPER JAM IN OUTPUT DEVICE	13.22 06 or 13.12 06	Elevator (Head Assembly) Jam when scanning and looking for home position.	1. Check for jammed paper in the delivery head assembly. 2. Check that the blind cover is properly installed. 3. Check that the Scan Bar (if stapler unit is installed) is properly seated. 4. Check for free movement of the delivery head assembly. 5. Check that all paper bins are seated correctly. 6. Check for broken paper bins, blind cover, or Scan Bar. 7. Replace the flat ribbon cable that connects to the delivery head assembly to the controller PCA. 8. Replace the delivery head motor (M1). 9. Replace the MBM controller PCA. 10. Replace the delivery head assembly.
13.22 or 13.12 PAPER JAM IN OUTPUT DEVICE	13.22 0A or 13.12 0A	Communication problem. Wrong Page Request.	1. Make sure that all the C-link cables are properly installed and the connectors of this cables are tight enough. 2. Move the 8-bin Mailbox away from the Engine and resend the job. 3. Replace the C-link cables. 4. Perform a Power Cycle. 5. If the error condition persists, replace the Formatter board.
66.12.08 or 66.22.08 OUTPUT DEVICE FAILURE	66.12.08 or 66.22 08	Flipper Motor Malfunction.	1. Check for jammed paper in the Flipper Assembly area. 2. Replace Flipper assembly. 3. Replace the MBM controller PCA.
66.12.09 or 66.22.09 OUTPUT DEVICE FAILURE	66.12.09 or 66.22 09	External Memory Error.	Replace the MBM Controller PCA.

Download Service Manual And Resetter Printer at http://printer1.blogspot.com

Table 7-11. 8-bin Mailbox Error Messages (continued)

Control Panel Message	Event Log Error Message	Description	Recommended Action
66.12.zz or 66.22.zz OUTPUT DEVICE FAILURE	66.12.zz or 66.12.zz	MBM C-link is not responding.	1. Check for proper installation of the C-link cables. 2. Replace the C-link cables. 3. Replace the 8-bin Mailbox controller PCA.

Download Service Manual And Resetter Printer at http://printer1.blogspot.com

Stapler Error Messages

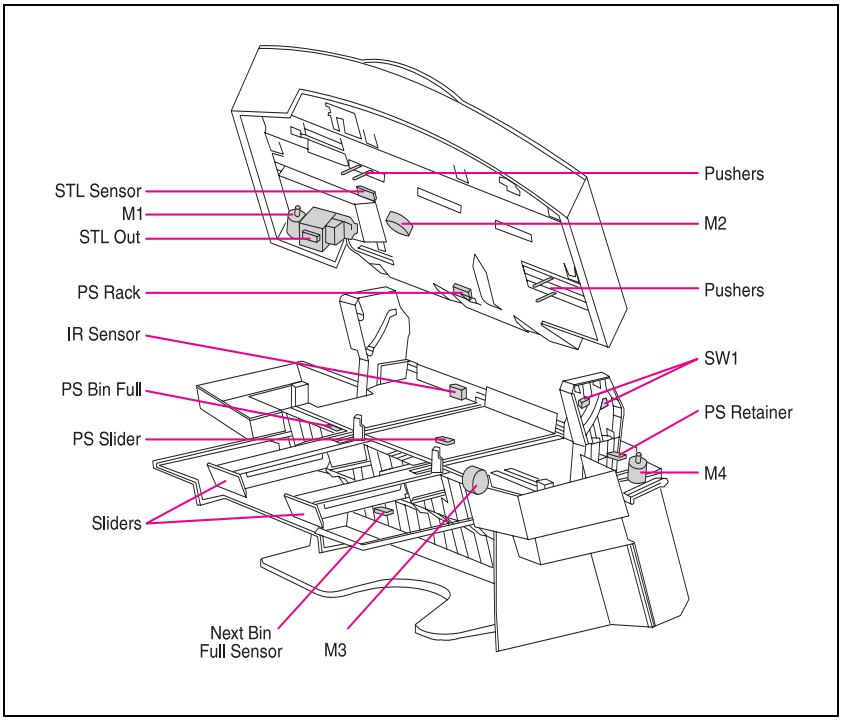

Table 7-12. Stapler Error Messages

Control Panel Message	Event Log Error Message	Description	Recommended Action
CHECK FINISHER DEVICE alternates with CLEAR JAM	Error	A stapler jam or a paper jam occurred.	1. Clear the paper from the stapler. 2. Open the top cover of the stapler and clear the stapler jam. 3. Resend the print job.
CHECK FINISHER DEVICE alternates with FINISHER ALIGN ERROR	Error	The paper is not aligned correctly in the stapler.	1. Remove the paper from the stapler. 2. Resend the print job.
FINISHER LOW ON FINISHING AGENT	Warning	The finishing device is running out of finishing material.	Refill the finishing device.

Download Service Manual And Resetter Printer at http://printer1.blogspot.com

Table 7-12. Stapler Error Messages (continued)

Control Panel Message	Event Log Error Message	Description	Recommended Action
FINISHER OUT OF BINDING AGENT	Error	The external paper handling finisher device is out of binding agent.	Refill the finishing device.
STAPLER LOW ON STAPLES	Warning	The stapler device is running out of staples.	Refill the stapler device.
STAPLER OUT OF STAPLES	Warning	The external paper handling stapler device is out of staples.	Refill the stapler device.
TOO MANY PAGES IN JOB TO STAPLE	Warning	The external paper handling stapler device received too many pages to staple. The pages will be ejected unstapled.	Staple the pages manually.
13.23 or 13.33 PAPER JAM IN OUTPUT DEVICE	13.33 0A	Staple Jam.	• Clear jammed staple. • Replace staple cartridge. • Replace Stapler Top Cover Assembly. • Replace Stapler Controller PCA.
	13.33 0B	Rack Jam.	• Remove jammed media. • Perform a device reset cycle by opening and closing the Stapler Top Cover. • Manually move the internal parts of the stapling unit looking for free movement. • Replace the Stapler Top Cover Assembly. • Replace the Stapler Controller PCA
	13.33 0C	Slider Jam.	• Remove jammed media. • Perform a device reset cycle by opening and closing the Stapler Top Cover. • Manually move the sliders looking for free movement and observe the power on sequence. • Replace the Stapling Bed Assembly • Replace the Stapler Controller PCA.

Download Service Manual And Resetter Printer at http://printer1.blogspot.com

Table 7-12. Stapler Error Messages (continued)

Control Panel Message	Event Log Error Message	Description	Recommended Action
13.23 or 13.33 PAPER JAM IN OUTPUT DEVICE	13.33 0D	Retainer Jam.	• Remove jammed media. • Perform a device reset cycle by opening and closing the Stapler Top Cover. • If the problem persists replace the Stapling Bed Assembly.

Download Service Manual And Resetter Printer at http://printer1.blogspot.com

Duplexer Error Messages

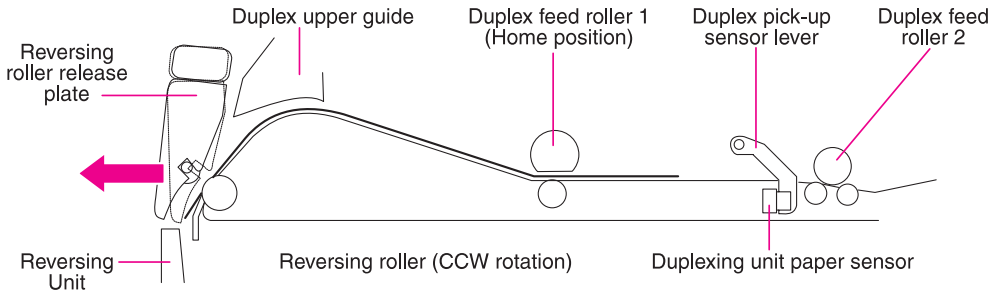

Table 7-13. Duplexer Error Messages

Control Panel Message	Event Log Error Message	Description	Recommended Action
13. 1	13.1 0B	Paper feed 1. Paper late jam. No page from Duplexer.	1. Open the front door, and remove any paper. 2. Open the right door, and remove any paper. 3. Remove any paper from the Duplexer. 4. Perform a Paper Path Test using the Duplexer. 5. Check that the sensors in the Duplexer have free movement. 6. If the problem persists, replace the entire Duplexer Unit.
	13.1 16	Paper feed 1. Paper late jam. Duplexer's 2nd sensor.	
	13.1 1F	Paper feed 1. Paper late jam. Duplexer's 2nd sensor.	
13.10	13.10 15	Duplex turn around. Paper late jam. Duplexer's 1st sensor.	
13.11	13.11 04	Duplex turn around. Paper stopped jam. Duplexer's 1st sensor.	
13.12	13.12 0D	Duplex path. Paper late jam. Duplexer's 2nd sensor.	
13.20	13.20 08	Could not automatically eject paper.	

Download Service Manual And Resetter Printer at http://printer1.blogspot.com

Paper Handling Controller Error Messages

Table 7-14. Paper Handling Controller Error Messages

Control Panel Message	Event Log Error Message	Description	Recommended Action
66.00.zz SERVICE ERROR	66.00.01 through 66.00.65	A communication error occurred in the Paper Handling Controller or in the controller PCA of an external paper handling device	1. Turn the printer off, and then turn the printer on. 2. Replace or exchange C-link cables. 3. If the problem persists, replace the PCA controller board for the input or output device. 4. If the problem persists, replace the Formatter PCA.
66.00.15 SERVICE ERROR	66.00.15	The Paper Handling Controller had a bad C-link (communication) cable. This error could be caused by a power failure.	1. Turn the printer off, and then turn the printer on. 2. If the problem persists, check the C-link and power cables. 3. If the problem persists, check the device power connector and power supply (internal or external). Replace if damaged. 4. If the problem persists, replace the PCA Controller board for the device. 5. If the problem persists, replace the Formatter PCA.
66.00.23 SERVICE ERROR	66.00.23	Error 66.00.23 is due to a bad C-link connection or a damaged C-link cable.	1. Turn the printer off, and then turn the printer on. 2. If the problem persists, replace the PCA Controller board for the input or output device. 3. If the problem persists, replace the Formatter PCA.

Download Service Manual And Resetter Printer at http://printer1.blogspot.com

2000-sheet Input Tray Stand-alone Diagnostics

The 2000-sheet Input Tray can run stand-alone diagnostic tests to test the device's motors, functionality, and sensors. You will need one power cord, one #2 Phillips screwdriver, and a small flat-blade screwdriver for the DIP switches.

2000-sheet Input Tray Motor Test

This test verifies that the three motors on the 2000-sheet Input Tray are functioning properly.

1. Identify the Back Cover (opposite from the tray door). Remove the four screws in the Back Cover. Remove the Back Cover (see "Back Cover" on page 169)
2. Pull open the paper tray, and open the Vertical Transfer Unit (VTU).
3. Set the DIP switches on the Controller PCA to Motor Test Mode. (See Table 7-15 on page 447 for an explanation of the DIP switch settings.)
4. To turn the Power Supply switch to Diagnostic Mode pull out on the blue handle.

- If the motors are working properly, you will hear them as they rotate continuously.
- If the motors do not rotate, replace the corresponding field-replaceable unit: either the Paper Pickup Assembly, the VTU, or the Paper Deck Drive Assembly.

5. To stop the test, set the power switch back to Operational Mode (push in), and reset the DIP switches on the Controller PCA to the off position (see Table 7-15 on page).

2000-sheet Input Tray Stand-alone Running Test

This test verifies that the 2000-sheet Input Tray is functioning properly. For this test, use the LED located on the Controller PCA on the 2000-sheet Input Tray. (See Table 7-16 on page 448 for an interpretation of the LED patterns.)

Download Service Manual And Resetter Printer at http://printer1.blogspot.com

CAUTION If the 2000-sheet Input Tray is setting underneath the printer, paper jams may occur because the printer will not pick up the paper. To prevent excessive paper jams during this test, feed only 6 to 8 pages.

1. Make sure that paper is in the tray.
2. Set the DIP switches on the Controller PCA for stand-alone running mode (see Table 7-15 for an explanation of the settings).
3. To set the power supply switch to Diagnostic Mode, pull the blue power supply switch outward. The motors will start. Paper should now be lifted from the tray and fed through the VTU.
   - If the unit does not work properly, the lower Service LED on the Controller PCA flashes in a pattern that indicates the problem. (See Table 7-16 on page 448 for an interpretation of the LED patterns.)
4. To stop the test, set the power supply switch back to Operational Mode, and set the DIP switches on the Controller PCA to the off position (see Table 7-15). Open the VTU, and remove any media from the paper path.

Download Service Manual And Resetter Printer at http://printer1.blogspot.com

2000-sheet Input Tray Sensor Test

This test manually activates the sensors on the 2000-sheet Input Tray to test if they are working properly.

1. Set the DIP switches on the Controller PCA for sensor test mode. (See Table 7-15 for an explanation of the settings.)
2. For each paper sensor:
   - **a** Pull open the paper tray, and open the VTU.
   - **b** Remove the metal spring that holds the sensor unit in place (secured by 1 screw). (See Figure 6-76, callouts 2 and 5.)
   - **c** Pull out the sensor unit.
3. To set the power supply switch to Diagnostic Mode, pull the blue power supply switch outward.
4. To manually activate each sensor, press it in with your finger.
   - When you activate the sensor, the bottom Service LED on the Controller PCA comes on. When you release the sensor, the LED goes off.
   - If the LED does not come on, there is a problem with the sensor. Replace the corresponding field-replaceable unit.

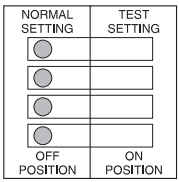

5. To stop the test, set the power supply switch back to Operational Mode, and set the DIP switches on the Controller PCA to the off position (see Table 7-15).

Table 7-15. DIP Switch Settings

DIP Switch	Normal	Motor Test	Stand-alone Running Test	Sensor Test
1	Off	On	On	Off
2	Off	On	Off	Off
3	Off	Off	Off	On
4	Off	On	On	On

Note Be sure to turn the power supply off and set all the DIP switches to the off position (normal settings) when you finish the diagnostics or the unit will not work properly. Then, replace the back cover.

Download Service Manual And Resetter Printer at http://printer1.blogspot.com

2000-sheet Input Tray LED Status Interpretation

If the 2000-sheet Input Tray is working properly, it will pick up paper from the tray and feed it through the VTU, and the bottom Service LED will flash regularly every 0.5 seconds.

Table 7-16. 2000-sheet Input Tray LED Status Interpretation

Long (1 sec.)	Short (.03 sec.)	Error Number/ Meaning	Recommended Action
3	1	66.11.01 Lifter Malfunction	Lift the tray by hand to make sure that it lifts freely. Make sure that the paper size plates are correctly installed (in the same corresponding slots) and are not bent. If neither if these is the problem, replace Tray 4.
2	1	13.11.11 Registration Sensor Delay Jam	The media does not reach the sensor. Open the VTU door, and remove the media. Replace the VTU assembly or the paper pickup assembly.
2	2	13.11.3B Registration Sensor Station Jam/Initial Jam	Open the VTU door, and remove the media. Check the sensors, and replace the corresponding field-replaceable unit.
2	3	13.11.31 Jam Sensor Delay Jam	The media did not reach the sensor. Open the VTU door, and remove the media. Replace the VTU or the paper pickup assembly.
2	4	13.11.21 13.11.2B Jam Sensor Stationary Jam/Initial Jam	Open the VTU door and remove the media.
1	1	VTU Door Open	Close the door.
1	2	Paper Tray Open Wrong Size Paper Loaded.	Close the tray. Load the correct size of paper, or check the sensors.
1	3	No Paper in Tray	Load paper, or check the sensors.

Note If the LED does not come on, replace the Paper Deck PCA or the Universal Power Supply Assembly.

Download Service Manual And Resetter Printer at http://printer1.blogspot.com

2 x 500-sheet Input Tray Standalone Diagnostics

The standalone diagnostics are designed to test the 2 x 500-sheet Input Tray's motors, functionality, and sensors. You will need a power cord, a #2 Phillips screwdriver, and a small flatblade screwdriver for the DIP switches.

If the 2 x 500-sheet Input Tray is working properly, it picks paper up from the tray and feeds it into the VTU, while the bottom service LED flashes regularly every 0.5 seconds.

Note To go from one test to another or to change the DIP switch settings, set the blue power supply switch to Operational Mode (push in). Reset the DIP switches on the Controller PCA, and then switch the power supply back to Diagnostic Mode (pull out) to enable the new diagnostic test. See figure 7-18 on page 452 for DIP switch settings.

2 x 500-sheet Input Tray Motor Test

This test verifies that the three motors on the 2 x 500-sheet Input Tray are functioning properly.

1. Identify the Back Cover (opposite side from tray door). Remove the 4 screws in the Back Cover. Remove the Back Cover.
2. Pull open Trays 4 and 5, and open the Vertical Transfer Unit (VTU).
3. Set the DIP switches on the Controller PCA to Motor Test Mode. (See table 7-8 on page 425 for an explanation of the DIP switch settings.)
4. To turn the power supply switch to Diagnostic Mode, pull out on the blue handle.
   - If the motors are working properly, you will hear them as they rotate continuously.
   - If the motors do not rotate, replace the corresponding field-replaceable unit: either the Paper Pickup Assembly, the VTU, or the Paper Deck Drive Assembly.
5. To stop the test, set the power supply switch back to Operational Mode (push in), and reset the DIP switches on the Controller PCA to the off position.

Download Service Manual And Resetter Printer at http://printer1.blogspot.com

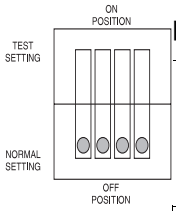

Table 7-17. DIP Switch Settings for troubleshooting test procedures

DIP Switch	Normal	Motor Test	Stand-alone Running Test	Sensor Test
1	Off	On	On	Off
2	Off	On	Off	Off
3	Off	Off	Off	On
4	Off	On	On	On

Note The DIP switch is on if it is set to the top. The DIP switch is off if it is set to the bottom.

2 x 500-sheet Input Tray Standalone Running Test

This test verifies that the 2 x 500-sheet Input Tray is functioning properly. For this test, use the LED located on the Controller PCA. (See table 7-18 on page 452 for an interpretation of the LED patterns.)

CAUTION If the 2 x 500-sheet Input Tray is underneath the printer, paper jams may occur because the printer will not pick up the paper. To prevent excessive paper jams during this test, feed only 6 to 8 pages.

1. Make sure that there is paper in both trays.
2. Set the DIP switches on the Controller PCA for standalone running mode (see table 7-17 on page 450 for an explanation of the settings).
3. To test Tray 5, open Tray 4.To test Tray 4, open Tray 5.

Download Service Manual And Resetter Printer at http://printer1.blogspot.com

4 To set the power supply switch to Diagnostic Mode, pull the blue power supply switch outward. The motors will start. Paper should now be lifted from the tray and fed through the VTU. The service LED flashes regularly every 0.5 seconds.

- If the unit does not work properly, the service LED on the Controller PCA flashes in a pattern that indicates the problem. (See table 7-18 on page 452 for an interpretation of the LED patterns.)

5 To stop the test, set the power supply switch back to Operational Mode. Open the VTU, and remove any media from the paper path.

6 To test Tray 4, close Tray 4 and open Tray 5. Repeat step 4.

7 To stop the test, set the power supply switch back to Operational Mode, and set the DIP switches on the Controller PCA to the off position (see table 7-17 on page 450). Open the VTU, and remove any media from the paper path.

2 x 500-sheet Input Tray Sensor Test

Note Be sure that trays 4 and 5 and the VTU are closed before starting the sensor test.

This test manually activates the sensors on the 2 x 500-sheet Input Tray to test if they are working properly.

1 Set the DIP switches on the Controller PCA for sensor test mode. (See table 7-8 on page 425 for an explanation of the settings.)

2 To set the power supply switch to Diagnostic Mode, pull the blue power supply switch outward.

3 To manually activate each sensor, press it in with your finger.

- When you activate the sensor, the service LED on the Controller PCA comes on. When you release the sensor, the LED goes off.
- If the LED does not come on, there is a problem with the sensor. Replace the corresponding field-replaceable unit.

4 To stop the test, set the power supply switch back to Operational Mode, and set the DIP switches on the Controller PCA to the off position (see table 7-8 on page 425).

Note Be sure to turn the power supply off, and set all the DIP switches to the off position (normal settings) when you finish the diagnostics or the printer will not work properly. Replace the back cover.

Download Service Manual And Resetter Printer at http://printer1.blogspot.com

2 x 500-sheet Input Tray LED Status Interpretation

If the 2 x 500-sheet Input Tray is working properly, it will pick up paper from the tray and feed it though the VTU and the bottom service LED will flash regularly every 0.5 seconds.

See page 425 for 2 x 500-sheet Input Tray error messages.

Table 7-18. Patterns of LED flashing (2-second pause between each pattern)

Long (1 sec)	Short (0.3 sec)	Error Number/ Meaning	Recommended Action
3	1	65.11.04 Lifter malfunction	Verify that the tray lifts up freely by lifting it by hand. Verify that the paper size plates are installed correctly (in the same corresponding slots) and are not bent. If neither of these is the problem, replace Tray 4 or 5.
2	1	13.11.11 Registration sensor delay jam	The media did not reach the sensor. Open the VTU door, and remove the media. Replace the paper feed (VTU) assembly or the paper pickup assembly.
2	2	13.11.31 Registration sensor stationary/jam initial jam	Open the VTU door, and remove the media. Check the sensors, and replace the corresponding field-replaceable unit.
2	3	13.11.1B Jam sensor delay jam	The media did not reach the sensor. Open the VTU door, and remove the media. Replace the paper feed (VTU) assembly or the paper pickup assembly.
2	4	13.11.3B Jam sensor stationary jam/initial jam	Open the VTU door, and remove the media.
1	1	The VTU door is open	Close the door.
1	2	Trays 4/5 are open Wrong paper size loaded	Close the tray(s). Check the sensors. Load the correct size of paper. Check the sensors.
1	3	No paper in trays 4/5	Load paper. Check the sensors.

Note If the LEDs will not come on, replace the paper deck PCA or the universal power supply assembly.

Download Service Manual And Resetter Printer at http://printer1.blogspot.com

7-bin Tabletop Mailbox Standalone Diagnostics

The standalone diagnostics are designed to test the device's motors, functionality, and sensors. You will need a power cord, a #2 Phillips screwdriver, and a small flatblade screwdriver for the DIP switches.

Note To change from one test to another or change the DIP switch settings, push the blue power supply switch in (off position), then set to the new test positions.

1. To remove the back cover remove 2 screws (see page 302).
2. Identify the interlock switch. This black switch is set when the 7-bin Tabletop Mailbox comes into contact with the printer. (Look on opposite side from the paper trays.) This interlock can be defeated by holding it in with a finger or a piece of tape.
3. Identify the DIP switch, SW1 (upper-right corner of the controller PCA).
4. Identify the service LED, LED1 (near the C-link connectors).

Table 7-19. DIP switch settings for troubleshooting test

DIP Switch	Normal Settings	Motor Test	Standalone Running Test Mailbox	Stacker	Sensor Test
1	Off	On	On	Off	Off
2	Off	On	Off	On	Off
3	Off	Off	On	Off	On
4	Off	On	Off	On	On

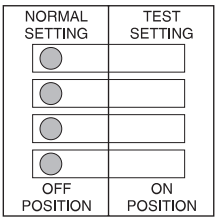

Note The DIP switch is on if it is set to the right. The DIP switch is off if it is set to the left.

Download Service Manual And Resetter Printer at http://printer1.blogspot.com

7-bin Tabletop Mailbox Motor Test

This test allows you to verify the functionality of the main motor, Face-down solenoid, and face-up diverter solenoid.

1. The top cover and paper access door must be closed to perform this test.
2. Set the DIP switches for the motor test (see table 7-19).
3. Pull out the power supply switch to the test position.
4. Press and hold in the interlock switch. A self-test should be performed, then the main motor will start moving continuously until the interlock switch is released. The service LED will flash every 0.5 seconds. If any other pattern results with the service LED, see table 7-20 on page 455 for the possible causes.
5. Push in the power supply switch to the normal position.

7-bin Tabletop Mailbox Standalone Running Test

This test allows you to feed paper into the unit to test the paper path without a connection to the printer. You can configure either the Mailbox Mode or the Stacker Mode to ensure the paper path is working properly.

1. The top cover and paper access door must be closed to perform this test.
2. Set the DIP switches for the standalone running test in either Mailbox Mode or the Stacker Mode (see table 7-19 on page 453).
3. Pull out the power supply switch to the test position.
4. Press and hold in the interlock switch. Perform a self-test. Then manually start feeding paper.
   - In Mailbox Mode, the unit will deliver paper to all bins, starting with the Face-up Bin, then down to the bottom bin.
   - In Stacker Mode, the unit will stack paper starting at the bottom bin until the top-of-stack is reached on each bin.
5. If problems are found, the possible cause will be indicated by the Service LED (see table 7-20 on page 455).
6. Push in the power supply switch to the normal position.

Download Service Manual And Resetter Printer at http://printer1.blogspot.com

7-bin Tabletop Mailbox Sensor Test

This test allows you to check if all unit sensors are working properly. By activating any unit sensor flag, the service LED should turn on.

1. Make sure that all bins are empty to perform the sensor test.
2. Set the DIP switches for the sensor test (see table 7-19 on page 453).
3. Do NOT press the interlock switch in at this time.
4. Pull out the power supply switch to the test position.
5. Make sure that the service LED is off.
6. Manually activate any sensor flag. The service LED should turn on if the sensor is functional.

Note To test the top cover or paper access door sensors, you need to press the interlock switch and simultaneously open and close each cover. A self-test should be performed, and the LED should remain on.

To test the bin full sensors, press the sensor in the paper tray closest to the back of the 7-bin Tabletop Mailbox (on your left as you face the bins). The test will not work if you press the sensor closest to the front of the device.

CAUTION Be sure to turn the power supply off and set all the DIP switches to the off position (normal settings) when you finish the diagnostics or the printer will not work properly. Replace the back cover.

See page 429 for 7-bin Tabletop Mailbox error messages.

Table 7-20. Patterns of Flashing LEDs

Long	Short	Error Number/ Meaning	Recommended Action
3	1	66.12.16 66.22.16 Paper exit solenoid malfunction	• Perform the motor test to check the solenoids. • Perform the sensor test. • Replace the sensor bin full PCA, solenoids, or controller board.
2	1	13.12.31 13.22.31 Initial jam	• Open the top cover and paper access door to remove any remaining paper, then perform a sensor test. • Replace the sensor bin full PCA or controller PCA.

Download Service Manual And Resetter Printer at http://printer1.blogspot.com

Table 7-20. Patterns of Flashing LEDs (continued)

Long	Short	Error Number/ Meaning	Recommended Action
2	2	13.12.01 13.22.01 Jam without delivery notice	• Open all covers and doors in the device, and remove any jammed paper. • Check for paper jammed in the printer. • Try printing again.
2	3	13.12.11 13.22.11 Entry sensor delay	• Open all covers and doors in the device, and remove any remaining media. • Check each output bin. • Perform a sensor check. • Check the sensor flag, the optical sensor, or cabling. • Replace the sensor PCAs. • Replace the controller PCA.
2	5	13.12.17 13.22.17 Face-up sensor delay	
2	7	Reversing area delay	
2	9	13.12.15 13.22.15 Vertical sensor delay	
2	4	13.12.21 13.22.21 Entry sensor activated too long	• Open the top and back covers, and remove any remaining media. • Check each output bin. • Perform a sensor check. • Check the sensor flag, the optical sensor, or cabling. • Replace the sensor PCAs. • Replace the controller PCA.
2	6	13.12.27 13.22.27 Face-up sensor activated too long	
2	8	13.12.21 13.22.21 13.12.27 13.22.27 Reversing area sensor activated too long	
2	10	13.12.22 13.22.22 13.12.25 13.22.25 Vertical sensor activated too long	
1	1	Door open or interlock switch deactivated	• Close the top cover and paper access door. • Firmly attach the 7-bin Tabletop Mailbox to the printer. • Perform a sensor check. • Check the bin full and interlock sensor PCA, cabling, and controller PCA.

Download Service Manual And Resetter Printer at http://printer1.blogspot.com

Table 7-20. Patterns of Flashing LEDs (continued)

Long	Short	Error Number/ Meaning	Recommended Action
1	2	Bin full when running the standalone test	● Remove paper from all the bins.

Download Service Manual And Resetter Printer at http://printer1.blogspot.com

8-bin Mailbox Stand-alone Diagnostics

The stand-alone diagnostics are designed to test the device's motors and functionality without connection to the printer. Note that the diagnostics do not test the functionality of the stapler. You will need one power cord and a small flat-blade screwdriver for the power supply switch.

8-bin Mailbox LEDs Description

The 8-bin Mailbox has two sets of LEDs:

- User LED. The first is a single LED located on the right side of the top cover (Figure 7-9, callout 1). This User LED provides information to the end user about the 8-bin Mailbox power-on status and the attachment and alignment to the printer.
- Service LEDs. The second set is formed by three independent LEDs located in the middle of the left side cover (Figure 7-9, callout 2). This group is called the Service LEDs, and they show additional technical information to decode the 8-bin Mailbox status.

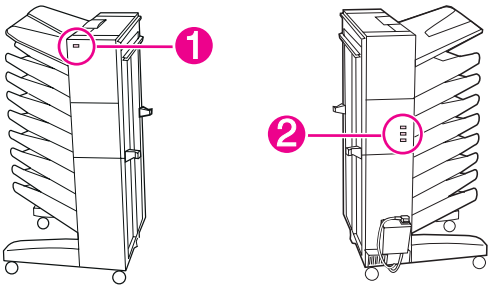

Figure 7-9 **8-bin Mailbox LEDs Description**

8-bin Mailbox Stand-alone Diagnostic Test

Each time you run the stand-alone diagnostic test, proceed as follows:

1. Turn off the printer, and pull the 8-bin Mailbox away from the printer.
2. With the 8-bin Mailbox unplugged, configure the power supply switch to the test mode by sliding the power supply switch up with a small flat-blade screwdriver (Figure 7-10, callout 1).

Download Service Manual And Resetter Printer at http://printer1.blogspot.com

Figure 7-10 **8-bin Mailbox Power Supply Test Mode Switch**

1 Plug in the power cord. The User LED should be solid green, and the Service LEDs should be ‘Off, Solid Red, Off’ to indicate the test mode has been entered.

Note Be sure to reset the power supply switch to the normal operation when you finish the diagnostics; otherwise the unit will not work properly.

Power-on Test

1 Push the 8-bin Mailbox interlock switch and keep it pressed. A sequence of tests will begin to test the device.

2 The head assembly will move up and down twice, scanning that all unit bins are properly installed and that all unit motors have started.

3 At the end of the power-on test, the flipper motor remains on and waits for paper to be fed.

4 The User LED remains solid green and the service LEDs remain ‘Off, Solid Red, Off’ as an indication that the power-on test was successful.

5 If a problem exists, an error code will be shown in the Service

Download Service Manual And Resetter Printer at http://printer1.blogspot.com

LEDs. (See table 3-3 for an interpretation of the LEDs.)

8-bin Mailbox Paper Path Test

1. If the power-on test is successful, then manually feed paper through the input paper guide in the horizontal position.
2. The paper will pass across the flipper assembly and move down to the bottom bin by the double belt system through the head assembly.
3. If after feeding several pages the paper path test is successful, then reattach the 8-bin Mailbox to the printer.
4. If a problem exists, an error code will be shown in the Service LEDs. (See table 7-21 for an interpretation of the LEDs.)

Note Be sure to reset the power supply switch to the normal operation when you finish the diagnostics; otherwise the unit will not work properly.

Download Service Manual And Resetter Printer at http://printer1.blogspot.com

8-bin Mailbox LEDs Status Interpretation

Table 7-21. 8-bin Mailbox LED Status Interpretation

Message Description/Number	User LED	Service LEDs	Recommended Action
● solid green ○ solid amber ◉ blinking amber		● solid red ◉ blinking red ○ blank	
MBM Ready The 8-bin Mailbox was successfully connected and initialized by the printer.	●	○ ○ ○	No action required.
PowerSave Mode The 8-bin Mailbox is in PowerSave mode.	●	○ ○ ●	No action required.
Self-test Mode The 8-bin Mailbox is in test mode.	●	○ ◉ ○	● Run the power-on test. ● Run the paper path test.
MBM Unlatched from the Printer The 8-bin Mailbox is not properly attached to the printer.	◉	○ ○ ○	● Check for proper alignment. ● Check the attachment clips. ● Check the Adjustable Casters. ● Check the Interlock Switch.
Face-up Bin is Too Full The Face-up Bin has too much paper and it has reached the PSFaceUp flat, avoiding the flipping operation. 65.12.01 65.22.01	◉	◉ ◉ ○	● Remove the paper from the Face-up Bin. ● Check for a stuck Sensor Flag. ● Replace the Flipper Assembly. ● Check for the proper cable connections.

Download Service Manual And Resetter Printer at http://printer1.blogspot.com

Table 7-21. 8-bin Mailbox LED Status Interpretation (continued)

Message Description/Number	User LED	Service LEDs	Recommended Action
● solid green ○ solid amber ● blinking amber		● solid red ● blinking red ○ blank	
Jam in Flipper Area A time-out condition occurred at the entry area. 13.12.02 13.22.02 65.12.01 65.22.01	●	○ ○ ●	● Open the Jam Access Door, and check for a paper jam or an out-of-place Flipper Assembly shaft. ● Check for a stuck paper sensor. ● Replace the Flipper Assembly. ● Replace the 8-bin Mailbox PCA.
Jam in Belt A time-out condition occurred in the Transport Belt. 13.12.03 13.22.03	●	○ ● ○	● Check for paper jammed at the Transport Belt System/ Delivery Head Assembly. ● Make sure that the Transport Belt (both belts) move freely. ● Make sure that the belts are parallel in the Transport Belt system. ● Make sure that the Metal Tape is in place and in good condition. ● Replace the Transport Belt Motor. ● Replace the 8-bin Mailbox PCA. ● Replace the Delivery Head Assembly.

Download Service Manual And Resetter Printer at http://printer1.blogspot.com

Table 7-21. 8-bin Mailbox LED Status Interpretation (continued)

Message Description/Number	User LED	Service LEDs	Recommended Action
● solid green ○ solid amber ● blinking amber		● solid red ● blinking red ○ blank	
Jam in Delivery Head Assembly A time-out condition occurred in the PSExit1 sensor. 13.12.05 13.22.05	●	○ ● ●	● Check for paper jammed in the Delivery Head Assembly. ● Make sure that both the PSExit1 and PSExit2 sensors on the Delivery Head Assembly move freely. ● Make sure that the fingers are over the Ejector Rollers on the Delivery Head Assembly. ● Replace the flat ribbon cable that connects to the Delivery Head Assembly. ● Replace the Delivery Head Assembly. ● Replace the 8-bin Mailbox PCA.

Download Service Manual And Resetter Printer at http://printer1.blogspot.com

Table 7-21. 8-bin Mailbox LED Status Interpretation (continued)

Message Description/Number	User LED	Service LEDs	Recommended Action
● solid green ○ solid amber ● blinking amber		● solid red ● blinking red ○ blank	
Jam in the Delivery Head Position System The elevator motor detected an invalid window when scanning. 13.12.06 13.22.06 65.12.03 65.22.03 65.12.03 65.22.03	●	● ○ ○	● Make sure that the Blind Cover and Scan Bar are installed properly. ● Check for paper jammed in the Transport Belt System and the Delivery Head Assembly. ● Make sure that the Delivery Head Assembly (up and down) moves freely. ● Make sure that all paper bins are seated correctly. ● Make sure that the paper bins and the Blind Cover are not broken. ● Replace the Delivery Head Position Motor. ● Replace the Delivery Head Assembly. ● Replace the 8-bin Mailbox PCA.
Slider Problem at the Head Assembly The sliders do not activate the slider photosensor. 65.12.04 65.22.04	●	● ○ ●	● Check for paper jammed in the Delivery Head Assembly. ● Make sure that all the paper bins are seated correctly. ● Replace the Delivery Head Assembly.

Download Service Manual And Resetter Printer at http://printer1.blogspot.com

Table 7-21. 8-bin Mailbox LED Status Interpretation (continued)

Message Description/Number	User LED	Service LEDs	Recommended Action
● solid green ○ solid amber ● blinking amber		● solid red ● blinking red ○ blank	
Wrong Page Request A page request was received with an invalid output bin or invalid paper size information. 13.12.0A 13.22.0A	●	● ● ●	● Check the bin destination. ● Check the paper size configuration. ● Turn on the printer.
Flipper Error During the flipper calibration, an abnormal reference voltage was encountered. 66.12.08 66.22.08	○	○ ○ ●	● Check for paper jammed in the Flipper Assembly area. ● Check the cable connections. ● Replace the Flipper Assembly. ● Replace the 8-bin Mailbox PCA.
External Memory Error The 8-bin Mailbox's nonvolatile RAM (NVRAM) is damaged. 66.12.09 66.22.09	○	○ ● ●	● Replace the 8-bin Mailbox PCA.

Download Service Manual And Resetter Printer at http://printer1.blogspot.com

Information Pages

From the printer's Control Panel you can print pages that give details about the printer and its current configuration. The following information pages are described here:

- Menu Map
- Configuration Page

For a complete list of the printer's information pages, print a Menu Map and see the Information Menu.

Menu Map

To see the current settings for the menus and items available in the Control Panel, print a Control Panel Menu Map:

1. Press MENU until `INFORMATION MENU` appears.
2. Press ITEM until `PRINT MENU MAP` appears.
3. Press SELECT to print the Menu Map.

The content of the Menu Map varies, depending on the options currently installed in the printer. The printer driver or software application can override many of these values. See figure 7-11 on page 467 for a sample Menu Map.

Download Service Manual And Resetter Printer at http://printer1.blogspot.com

HP LaserJet *8100 series printer*

HEWLETT® PACKARD

Menu Map 1

INFORMATION MENU
- PRINT MENU MAP
- PRINT CONFIGURATION
- PRINT PCL FONT LIST
- PRINT PS FONT LIST
- PRINT FILE DIRECTORY
- PRINT EVENT LOG
- SHOW EVENT LOG
- PRINT PAPER PATH TEST
- PRINT USAGE PAGE

PAPER HANDLING MENU
- TRAY 1 MODE= FIRST
- TRAY 2 TYPE= PLAIN
- TRAY 3 TYPE= PLAIN
- TRAY 4 TYPE= PLAIN
- PAPER DEST= STANDARD OUTBIN
- MANUAL FEED=OFF
- OVERRIDE A4/LETTER=NO
- CONFIGURE FUSER MODE MENU=NO

PRINT QUALITY MENU
- RESOLUTION= FASTRES 1200
- RET=MEDIUM
- ECONOMODE=OFF
- TONER DENSITY=3
- CREATE CLEANING PAGE

PRINTING MENU
- COPIES=1
- PAPER= LETTER
- CONFIGURE CUSTOM PAPER=NO
- FORM=60 LINES
- ORIENTATION= PORTRAIT
- PCL FONT SOURCE= INTERNAL
- PCL FONT NUMBER= 0
- PCL FONT PITCH= 10.00
- PCL SYMBOL SET= PC-8

Menu Continued
- COURIER=REGULAR
- WIDE A4=NO
- APPEND CR TO LF= NO
- PRINT PS ERRORS= OFF

CONFIGURATION MENU
- POWERSAVE= 1 HOUR
- PERSONALITY= AUTO
- RESOURCE SAVE= OFF
- CLEARABLE WARNINGS=JOB
- AUTO CONTINUE= ON
- TONER LOW= CONTINUE
- JAM RECOVERY= AUTO
- NEW TONER CARTRIDGE=NO
- QUICK COPY JOBS=32

CONFIGURATION OF MBM-5S
- OPERATION MODE: MAILBOX

I/O MENU
- I/O TIMEOUT=15
- I/O BUFFER=AUTO
- PARALLEL HIGH SPEED=YES
- PARALLEL ADV FUNCTIONS=ON

EIO 1 JETDIRECT MENU
- CFG NETWORK=NO

RESETS MENU
- RESET MEMORY
- RESTORE FACTORY SETTINGS
- RESET ACTIVE I/O CHANNEL
- RESET ALL I/O CHANNELS

Figure 7-11 **Sample Menu Map**

Download Service Manual And Resetter Printer at http://printer1.blogspot.com

Configuration Page

Use the configuration page to view current printer settings, help troubleshoot printer problems, or verify installation of optional accessories, such as memory (DIMMs), paper trays, and printer languages.

To print a configuration page:

1. Press MENU until INFORMATION MENU appears.
2. Press ITEM until PRINT CONFIGURATION appears.
3. Press SELECT to print the configuration page.

See figure 7-12 on page 469 for a sample configuration page. The content of the configuration page varies, depending on the options currently installed in the printer.

If any of the installed devices are not shown on the configuration page, verify that the C-link cabling is correctly connected and functional (figure 7-14 on page 473) and that DC power is available to the paper handling devices. Check and reseat suspect cable connections. If any of the cables are replaced, you must cycle the power to have the printer recognize the device again.

The Menu Map shows current control panel settings. See figure 7-11 on page 467 for a sample Menu Map. See chapter 3 for information about the default settings.

Download Service Manual And Resetter Printer at http://printer1.blogspot.com

Printer Information
Lists the serial number, HP JetSend IP addresses, page counts, and other information for the printer.

Memory
Lists printer memory, PCL Driver Work Space (DWS), and I/O buffering and resource saving information.

Event Log
Lists the number of entries in the log, the maximum number of entries viewable, and the last three entries.

Security
Lists the status of the printer's Control Panel lock, Control Panel password, and disk drive.

Installed Personalities and Options
Lists all printer languages that are installed (such as PCL and PS) and lists the options that are installed in each DIMM slot and EIO slot.

HP TonerGauge
Indicates the amount of toner remaining in the cartridge. Must be reset at the Control Panel when a new cartridge is installed.

Paper Trays and Options
Lists the size settings for all the trays and lists the optional paper handling devices that are installed.

HP LaserJet *8100 series printer*

HEWLETT PACKARD

Configuration Page 1

Printer Information

```
Product Name:  HP LaserJet 8100 Series
Printer Name:  HP LaserJet 8100 Series
Printer Number:  B
Formatter Number:  S46XXXXXXXX
Printer Serial Number:  USMT210179
Firmware Datecode:  19980615 MB5.19
PS Wait Time-out:  300 seconds
Page Count:  1312 (12)
Preventive Maintenance Interval: 350000
Pages Since Last Maintenance: 0    (12)
HP JetSend Address: ip:192.0.0.192
Build: 19980615.1411 freezer nodebug freeze_MB5.21
```

Memory

```
Total Memory:  24 MBytes
DWS:  19.16
I/O Buffering:
  100K bytes Allocated of 16300K bytes Available
Resource Saving:
  0K bytes Allocated of 13300K bytes Available
```

Event Log

```
Number of Entries in Use:  0
Maximum Number of Entries:  30
Event Log Is Empty
```

Security

```
Control Panel Lock:  NONE
Control Panel Password:  DISABLED
Write Protect:  DISABLED
```

Installed Personalities and Options

```
PCL  (19980615)
PCLXL  (19980615)
PS  (19980615)
DIMM Slot 1:  Empty
DIMM Slot 2:  Empty
DIMM Slot 3:  Side 1: 8 MByte SDRAM
              Side 2: 8 MByte SDRAM
EIO 1:  HP JETDIRECT          J3113A
EIO 2:  Disk (HP C2985A)
EIO 3:  Empty
DISK Storage:  1408176K byte Capacity
```

Paper Trays and Options

```
Mopier: ON
Default Paper Size:  LETTER
Tray 2 (LETTER)
Tray 3 (11X17)
Duplex Unit
PHC V3.0 (19980615)
Device 1:
   HEWLETT-PACKARD
   2000 SHEET INPUT TRAY HCI/2 [3.8]  C4781
     Input Trays:
       1: TRAY 4, 2000 Sheets
Device 2:
   HEWLETT-PACKARD
   MULTIBIN MAILBOX MBM-5S [19.00] C4787A
     Output Bins:
       1: FACE UP BIN, 100 Sheets, Face Up
       2: OPTIONAL BIN 1, 250 Sheets, Face Down
       3: OPTIONAL BIN 2, 250 Sheets, Face Down
       4: OPTIONAL BIN 3, 250 Sheets, Face Down
       5: OPTIONAL BIN 4, 250 Sheets, Face Down
       6: OPTIONAL BIN 5, 250 Sheets, Face Down
Device 3:
   HEWLETT-PACKARD
   STAPLER MODULE C3766B [4.8]
     Output Bins:
       1: OPTIONAL BIN 6, 300 Sheets, Face Up
```

HP TonerGauge

Figure 7-12 **Sample Configuration Page (1 of 2)**

Download Service Manual And Resetter Printer at http://printer1.blogspot.com

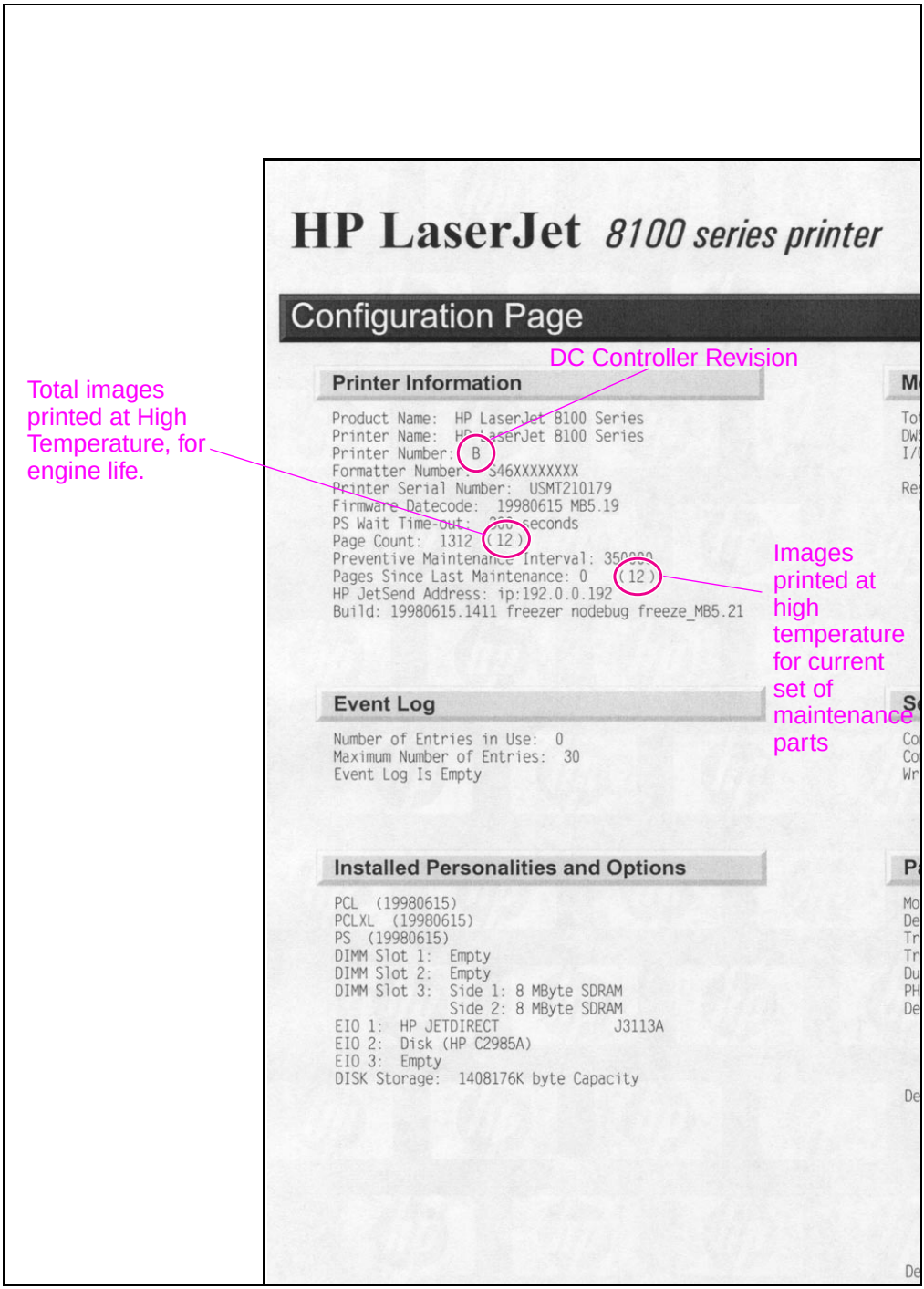

Figure 7-13 **Sample Configuration Page (2 of 2)**

Download Service Manual And Resetter Printer at http://printer1.blogspot.com

Verify Installed Options

In the Installed Personalities and Options section on the configuration page, look for options such as hard disk information and DIMM types RAM or ROM and sizes.

Verify that the options installed in the printer are reflected in the configuration page. If an installed device is not shown on the configuration page, see table 7-22 on page 472 for recommended actions.

The Paper Tray and Options section of the configuration page identifies two types of paper handling devices that communicate or interact with the printer:

- Engine DC controller-driven devices
  - Duplexer
  - Envelope Feeder
- Communication Link Devices (C-link protocol)
  - **Input devices:**
    2000-sheet Input Tray
    2 x 500-sheet Input Tray
  - **Output devices:**
    8-bin Mailbox
    5-bin Mailbox with Stapler (includes a finisher)
    7-bin Tabletop Mailbox

While the engine DC controller-driven devices draw power (24V DC) and control signals from the engine, the C-link devices have their own power supply and controller board.

The information from the Paper Handling Controller is carried by the C-link cables that connect the controller board of all the C-link protocol supported devices. The C-link protocol supports up to 5 devices connected to the paper handling controller in a daisy chain. Each device controller has an input or output port that provides flexible connections in different configurations. However, it is recommended to use the configuration shown in figure 7-14 on page 473 to avoid rearrangements in the supported device numbering and confusions when evaluating the Event Log.

Download Service Manual And Resetter Printer at http://printer1.blogspot.com

Table 7-22. Printer Devices Troubleshooting

Device	Action if installed and not detected
Duplexer	Turn the power off, reseat the Duplexer, verify that the connector is not broken, and turn the printer on. If the connector is broken or turning the printer on and off does not work, then replace the duplex cable and/or duplexer.
Envelope Feeder	Turn the power off, reseat the envelope feeder, and turn the printer on. If this does not work, replace the envelope feeder.
Device 1 2000-sheet Input Tray Device 2 8-bin Mailbox Device 3 Stapler	Verify that the C-link cables are installed correctly (see figure 7-14 on page 473). Remove all C-link connections and visually inspect for connector damage on the cable pins and connector ends. Try using a different cable to connect the problem device directly to the Paper Handling Controller. All C-link cables are wired the same, but are different lengths. If a device is not recognized, replace the device controller or defective C-link cable.
Device 1 2 x 500-sheet and 2000-sheet Input Tray	Verify that AC power is present in the 2000-sheet or 2 x 500-sheet Input Tray. Verify that the C-link cable is connected properly to the Paper Handling Controller or the tray will not lift.
Device 2 7-bin Tabletop Mailbox	Verify that the DC power supply is receiving power. Verify that the DC power supply output is connected to the 8-bin Mailbox controller. Verify that the C-link cables are properly installed and external power applied. Check if Fuse F202 in the 2 x 500-sheet or 2000-sheet Input Tray's Controller PCA is blown. Replace the DC power supply. Replace the 8-bin Mailbox controller.

Download Service Manual And Resetter Printer at http://printer1.blogspot.com

Communication

Ask the customer to run a print job from the host system. If the print job is successful, communication to the printer is ensured.

Interface Troubleshooting

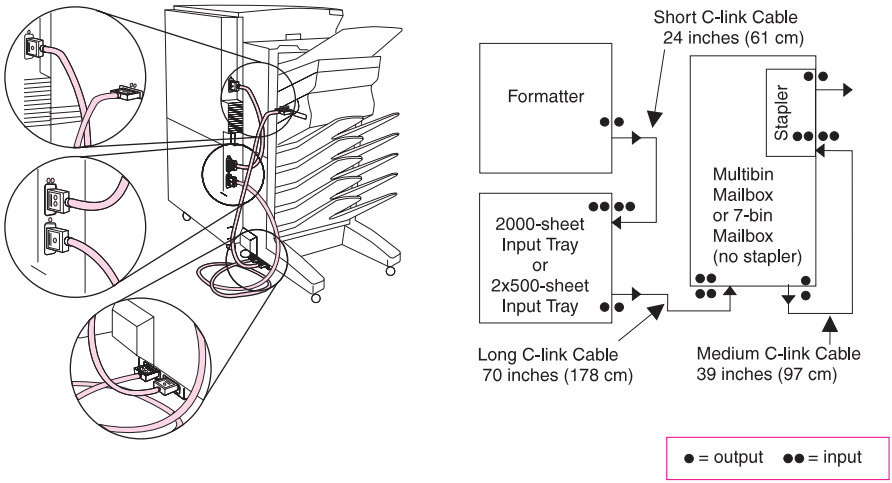

Figure 7-14 **Communications Link (C-link) Cables, Supported Daisy Chain Connections**

Note If the 7-bin Tabletop Mailbox is sitting on a tabletop instead of on a stand, it is the first device in the daisy chain.

All C-link cables have a single dot molded into the device output connector cable end, and two dots molded into the device input connector cable end.

Note It is important that the C-link cables are installed in the supported daisy chain configuration as shown in figure 7-14. This is so that the devices are recognized and correctly reported on the Event Log.

It is possible, but not recommended, to attach the C-link cables in other configurations. This will rearrange the supported device numbering. Keep this configuration in mind when evaluating the Event Log.

Download Service Manual And Resetter Printer at http://printer1.blogspot.com

If any of the installed devices are not shown on the configuration page, verify that the C-link cabling is correctly connected and functional (figure 7-14) and that DC power is available to the paper handling devices. Check and reseat suspect cable connections. If any of the cables are replaced, you must cycle the power to have the printer recognize the device again.

Download Service Manual And Resetter Printer at http://printer1.blogspot.com

Image Quality

When you are working with customers, obtain a print sample before you begin troubleshooting their printer. Ask the customer to explain the quality they expect from the printer. The print sample will also help clarify the customer's explanation and expectations.

Table 7-23. Image Quality

Problem	Action
1. Do you have a print sample?	Obtain a print sample from the customer.
2. Does the problem repeat on the page?	Use the Repetitive Defect Ruler in figure 7-15 on page 491.
3. Is the toner cartridge full and is it manufactured by HP?	Check the toner cartridge using the check list on page 476.
4. Is the printer clean?	Perform the cleaning procedure described in “Cleaning the Printer and Accessories” on page 86.
5. Is the customer using print media that meets all HP paper specification standards?	For more information about HP's paper specification standards, see “Paper Capacities and Sizes” on page 4 and the *HP LaserJet Family Paper Specification Guide*.
6. Is the print sample similar to those in the “Image Quality Tables” on page 477?	Compare and perform the actions recommended in “Image Quality Tables” on page 477.
7. Is the problem on the drum or transfer roller?	Perform the steps in “Half Self Test Functional Check” on page 492 to determine where the defect is. If the defect is on the drum, replace the toner cartridge. If it is not on the drum, replace the transfer roller.

Download Service Manual And Resetter Printer at http://printer1.blogspot.com

Check the Toner Cartridge

Image formation defects are often the result of toner cartridge problems. If there is any doubt, always replace the toner cartridge before troubleshooting image defects.

Use the following check list to make sure that the toner cartridge is still operable.

- Make sure that the toner cartridge has toner.
  Full toner cartridge weight = 3200 grams (114 oz)
  Empty weight = 2200 grams (80.5 oz)
- Check the expiration date of the toner cartridge (stamped on the cartridge box).
- Check the toner cartridge to see if it has been disassembled or refilled.
- Make sure that the toner cartridge is seated properly in the printer cavity.
- Inspect the cartridge for toner leaking through worn seals. (If the drum has been manually rotated it may have caused internal damage and toner spills may result.)

Note Toner cartridges are rated for 20,000 images at 4% coverage. It is possible to wear out the gears and the cartridge seals before `TONER LOW` is displayed if the 20,000 image expectancy is exceeded.

- Check the surface of the photosensitive drum in the toner cartridge to see if it has been damaged or scratched. Touching the drum will contaminate the photosensitive surface and may cause spotting and defects during printing.
- White areas on the page may indicate that the drum has been exposed to light for too long. If white areas appear, stop the printer and wait a few minutes. This should eliminate most defective images. If not, the toner cartridge may be placed in a dark environment for several days, which may restore some life to the drum.

Download Service Manual And Resetter Printer at http://printer1.blogspot.com

Image Quality Tables

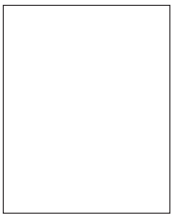

Table 7-24. Blank (White) Page

Possible Cause	Recommended Action
OCCASIONAL BLANK PAGES:	
1. Software Configuration.	Make sure that the application software is not sending incorrect page length requests, or extra page eject commands.
2. Network Configuration. Some sharing devices on networks may generate a blank page as a separator.	Check with the network administrator.
3. Multiple Feeds. The printer may be feeding two or more pages at once because the paper is difficult to separate.	Remove the paper from the tray and bend the stack to separate the pages (see the *HP LaserJet Printer Family Paper Specifications Guide*).
ALL PAGES BLANK:	
1. Sealing tape left in toner cartridge.	Remove the sealing tape.

Table 7-25. Black Pages

Possible Cause	Recommended Action
1. Defective toner cartridge.	Replace the toner cartridge.
2. Light is leaking into the printer.	Make sure that all covers are in place.

Download Service Manual And Resetter Printer at http://printer1.blogspot.com

Table 7-25. Black Pages (continued)

Possible Cause	Recommended Action
3. High voltage contact springs are dirty or defective. The high voltage contacts are mounted on the High Voltage Power Supply PCA and protrude into the toner cartridge cavity.	Inspect and clean the high voltage contacts. If damaged, replace the High Voltage Power Supply PCA. See “High Voltage Power Supply (HVPS)” on page 219 for instructions.
4. High voltage power supply circuit is defective (not supplying the correct negative voltage).	Replace the High Voltage Power Supply PCA. See “High Voltage Power Supply (HVPS)” on page 219 for instructions.
5. DC Controller PCA is defective. If the DC Controller turns on the laser beam continuously, the entire surface of the Photosensitive drum is neutralized causing a completely black page.	Replace the DC Controller PCA. See “PCA, DC Controller” on page 211 for instructions.
6. Laser/Scanner Assembly is faulty (turning laser on continuously).	Replace the Laser/Scanner Assembly. See “Laser/Scanner Assembly” on page 204 for instructions.
7. Connectors between the Laser/Scanner unit and DC Controller are not seated properly or are defective.	Inspect and reseat the connectors. Replace cables as necessary.

AaBbCc
AaBbCc
AaBbCc
AaBbCc
AaBbCc

Table 7-26. Fading Print

Possible Cause	Recommended Action
1. Toner supply is low.	Shake the cartridge gently to redistribute the toner, or replace the cartridge.
2. Print Density is set incorrectly.	Change to a darker setting and retry printing.

Download Service Manual And Resetter Printer at http://printer1.blogspot.com

AaBbCc
AaBbCc
AaBbCc
AaBbCc
AaBbCc

Table 7-26. Fading Print (continued)

Possible Cause	Recommended Action
3. EconoMode is on. EconoMode saves toner by reducing the dot density. This may appear to be a print quality problem in some cases.	Turn EconoMode off. Verify that EconoMode is not being enabled by either the printer driver or the job application.
4. Paper does not meet specifications. The moisture content, conductivity, or surface finish may not work correctly with the electrophotographic process.	Try a different paper lot (see *HP LaserJet Printer Family Paper Specifications Guide*).
5. Transfer Roller is defective or incorrectly installed. If the Transfer Roller loses conductivity, it cannot effectively pull toner from the drum to the paper.	Inspect the Transfer Roller for proper installation and contact. If the Transfer Roller is damaged, replace it. See “Transfer Roller Assembly” on page 232 for instructions.
6. Laser/Scanner door is not opening properly.	1. Remove and reseat the toner cartridge. 2. Check the Laser/Scanner shutter door for proper operation. If defective, replace the Laser/Scanner Assembly. See “Laser/Scanner Assembly” on page 204 for instructions.
7. High voltage contact springs are dirty or defective. The high voltage contacts are mounted on the High Voltage Power Supply PCA and protrude into the toner cartridge cavity.	Check the contacts for functionality. If dirty, clean using alcohol; if damaged, replace the High Voltage Power Supply PCA. See “High Voltage Power Supply (HVPS)” on page 219 for instructions.
8. High Voltage Power Supply PCA is defective.	Replace the High Voltage Power Supply PCA. See “High Voltage Power Supply (HVPS)” on page 219 for instructions.
9. DC Controller PCA is defective. The DC Controller supplies the proper voltage to the High Voltage Power Supply PCA.	Replace the DC Controller PCA. See “PCA, DC Controller” on page 211 for instructions.

Download Service Manual And Resetter Printer at http://printer1.blogspot.com

Table 7-27. Dropout

Possible Cause	Recommended Action
1. Single sheet of paper is defective.	Try reprinting the job.
2. Paper does not meet specifications. The moisture content, conductivity, or surface finish may not work correctly with the electrophotographic process.	Try a different paper lot (see *HP LaserJet Printer Family Paper Specifications Guide*).
3. DC Controller is defective (low primary voltage).	Replace the DC Controller. See “PCA, DC Controller” on page 211 for instructions.
4. High Voltage Power Supply PCA is defective.	Replace the High Voltage Power Supply PCA. See “High Voltage Power Supply (HVPS)” on page 219 for instructions.
5. Transfer Roller is defective.	Replace the Transfer Roller. See “Transfer Roller Assembly” on page 232 for instructions.

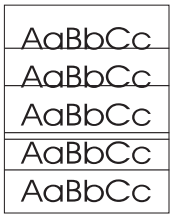

Table 7-28. Black Lines (parallel or perpendicular to path)

Possible Cause	Recommended Action
1. Toner cartridge is not seated properly.	Remove the cartridge and reinsert it.
2. Toner cartridge is damaged.	Inspect the toner cartridge for a scratched or streaked photosensitive drum. Clean the printer (see “Cleaning the Printer and Accessories” on page 86), and replace the cartridge.

Download Service Manual And Resetter Printer at http://printer1.blogspot.com

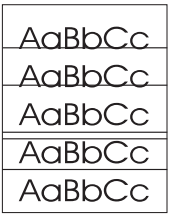

Table 7-28. Black Lines (parallel or perpendicular to path)

Possible Cause	Recommended Action
3. Fusing Assembly is contaminated or damaged.	Inspect the Fusing Assembly for toner build-up or scratches on the fuser rollers. Replace the Fusing Assembly if damaged. See “Fusing Assembly” on page 202 for instructions.
4. Static Eliminator Strip teeth are contaminated or defective.	Clean using compressed air. Be careful not to spray the Transfer Roller.
5. Repetitive defect. If the lines are repeated at a consistent interval down the page, this is a repetitive defect.	See the Repetitive Image Defect Ruler (figure 7-15 on page 491).

Table 7-29. Toner Smear

Possible Cause	Recommended Action
1. Paper does not meet specifications. The moisture content, conductivity, or surface finish of the media being printed may not work correctly with the electrophotographic process.	Try a different paper lot or other media (see *HP LaserJet Printer Family Paper Specifications Guide*).
2. Fusing Rollers are dirty. Toner build-up can cause the print on a page to smear.	Remove and inspect the Fusing Assembly for excessive toner build-up.
3. The Static Eliminator Strip is dirty or is not grounded, allowing a static charge to remain on the page.	Clean the Anti-Static Brush using compressed air.

Download Service Manual And Resetter Printer at http://printer1.blogspot.com

Table 7-29. Toner Smear (continued)

Possible Cause	Recommended Action
4. Fusing Assembly is defective. The print will smear if the Fusing Assembly is not heated sufficiently to bond the toner image to the paper.	Replace the Fusing Assembly. See “Fusing Assembly” on page 202 for instructions. Try changing fuser modes depending on the type of media used.
5. DC Controller is defective. The DC Controller regulates fusing roller temperature.	If a new Fusing Assembly does not resolve the problem, replace the DC Controller PCA. See “PCA, DC Controller” on page 211 for instructions.

Table 7-30. Background Scatter

Possible Cause	Recommended Action
Random Background Scatter	
1. Paper does not meet specifications. The moisture content, conductivity or surface finish may not work correctly with the electrophotographic process.	Try a different media or paper lot (see *HP LaserJet Printer Family Paper Specifications Guide*).
2. Inside of printer is dirty (toner may have leaked out of the toner cartridge).	Clean inside of printer (see “Cleaning the Printer and Accessories” on page 86). Install a new toner cartridge if leaking.
3. Printing on envelope seams. Printing on an envelope seam can cause a background scatter problem.	Move the text to an area without seams. If not printing on seams, try a higher print density setting (see item 6, below).
4. Toner cartridge is defective.	Install a new toner cartridge.

Download Service Manual And Resetter Printer at http://printer1.blogspot.com

Table 7-30. Background Scatter (continued)

Possible Cause	Recommended Action
5. Transfer Roller is dirty or worn. A worn Transfer Roller can cause background scatter due to improper bias voltages.	Clean the Transfer Roller using a dry, lint-free cloth. DO NOT touch the Transfer Roller with your fingers. If the problem persists, replace the Transfer Roller Assembly. See “Transfer Roller Assembly” on page 232 for instructions.
6. Print Density is set too low, causing background scatter, particularly with envelopes and heavier papers.	Adjust the print density to a higher setting.
Background Scatter at Leading Edge Only (Leading Edge Halo)	
1. Toner buildup in the Fuser Inlet Guide.	Clean Fuser Inlet Guide. See “Cleaning the Printer and Accessories” on page 86 for instructions.

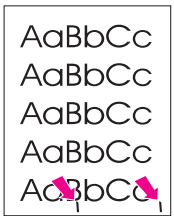

Table 7-31. Repetitive Defects

Possible Cause	Recommended Action
1. Toner cartridge is damaged. If the defect repeats at any of the following intervals and in the direction of paper movement, it is associated with a component inside the toner cartridge. See figure 7-15 on page 491.	Inspect the drum for scratches or damage. Replace the toner cartridge. Use the Repetitive Defect Ruler, figure 7-15 on page 491.
2. Transfer Roller has toner on it. If defects occur on the back of the page at intervals of 54mm (2.3 inches), the Transfer Roller may be dirty. This problem sometimes corrects itself after a few pages.	Clean the Transfer Roller using a dry, lint-free cloth. DO NOT touch the Transfer Roller with your fingers. If the problem persists, replace the Transfer Roller Assembly. See “Transfer Roller Assembly” on page 232 for instructions.

Download Service Manual And Resetter Printer at http://printer1.blogspot.com

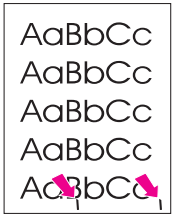

Table 7-31. Repetitive Defects (continued)

Possible Cause	Recommended Action
3. Rollers are dirty. Any dirty roller in the paper path may result in a repetitive print defect.	Examine and clean the rollers in the paper path. See “Cleaning the Printer and Accessories” on page 86.
4. Fusing Assembly is dirty or defective.	Clean the Fusing Assembly using alcohol. If the problem persists, replace the Fusing Assembly. See “Fusing Assembly” on page 202 for instructions.
5. Gears are worn, causing slippage or jumping.	Inspect the gears driving the toner cartridge and the Fuser. Replace the Main Drive Assembly if necessary. See “Main Gear Assembly” on page 206 for instructions.
6. Paper does not meet specifications. The surface of the paper may be too coarse, causing repeated marks.	Try a different media or paper lot (see *HP LaserJet Printer Family Paper Specifications Guide*).

Table 7-32. Line at Edge of Paper

Possible Cause	Recommended Action
Toner cartridge is defective. The photosensitive drum is wearing out. The line will grow wider, with cross-hatching. Shaking the cartridge does not relieve the problem.	Replace the toner cartridge.

Download Service Manual And Resetter Printer at http://printer1.blogspot.com

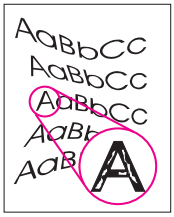

Table 7-33. Misshapen Characters, Voids

Possible Cause	Recommended Action
1. Paper surface too rough. Toner migrates to low spots, leaving higher areas void.	Turn EconoMode off. Use paper with correct finish (smoothness) (see *HP LaserJet Printer Family Paper Specifications Guide*).
2. Printing on wrong side of paper. The label on the ream of paper indicates which side to print on. The different surface properties of some papers may cause problems if loaded wrong side up.	Turn EconoMode off. Check for the arrow on the paper wrapper. Be sure paper is loaded with the arrow pointing up in Tray 1 or down in Trays 2, 3, 4, and 5.
3. Paper surface is too smooth for proper toner adhesion.	Turn EconoMode off. Use paper with correct finish (smoothness) (see *HP LaserJet Printer Family Paper Specifications Guide*).
4. Transparencies are bad. Transparencies can have this problem because they are not designed for proper toner adhesion.	Turn EconoMode off. Use Hewlett-Packard approved transparencies (see *HP LaserJet Printer Family Paper Specifications Guide*).
5. Transfer Roller is bad. If the Transfer Roller has finger oils on its surface, is dirty, or is worn-out, this problem can result.	Turn EconoMode off. Clean the Transfer Roller using a dry, lint-free cloth. DO NOT touch the Transfer Roller with your fingers. If the problem persists, replace the Transfer Roller Assembly. See “Transfer Roller Assembly” on page 232 for instructions.
6. Laser/Scanner Assembly is bad.	Replace the Laser/Scanner Assembly. See “Laser/Scanner Assembly” on page 204 for instructions.

Download Service Manual And Resetter Printer at http://printer1.blogspot.com

Table 7-34. Faulty Registration

Possible Cause	Recommended Action
1. Paper tray is overloaded. If the tray is overloaded, the Pickup Rollers may not pick correctly.	Reload proper amount of paper squarely in the tray. Review paper loading with the customer.
2. Paper guide on the paper tray is incorrectly adjusted. If the guide is pushing too tightly against the paper, it may be delayed in being pulled into the printer. If the guide is too loose, it may cause image skewing.	Make sure that the paper guide is adjusted for the correct paper size and is locked into position.
3. Paper does not meet specifications. The surface of the paper may be too smooth for the Pickup and Feed Rollers to correctly feed paper into the printer.	Try a different paper lot (see *HP LaserJet Printer Family Paper Specifications Guide*).
4. Drive gears are worn or broken. If any gear within the drive train or paper path becomes excessively worn or dirty, erratic paper movement can result.	Replace the defective gear or Main Drive assembly. See “Main Gear Assembly” on page 206 for instructions.
5. Worn Pickup or Registration Rollers. Paper is not being picked up consistently.	Inspect all paper path rollers, looking for wear, cracks, or glazing. Replace the worn rollers.

Table 7-35. Image Skew

Possible Cause	Recommended Action
1. Paper is loaded incorrectly. If the paper is not installed flush into the paper tray, a skewing problem will result.	Remove paper from the tray, and install paper correctly. Position the paper guide correctly for the paper size being used.
2. Paper size adjustment levers are missing or installed incorrectly.	Verify and correct.

Download Service Manual And Resetter Printer at http://printer1.blogspot.com

Table 7-35. Image Skew (continued)

Possible Cause	Recommended Action
3. Paper lot is bad. Paper that is manufactured poorly or inconsistently or that has too smooth or too rough a surface texture can cause an image skew problem.	Try a different paper lot (see *HP LaserJet Printer Family Paper Specifications Guide*).
4. Pickup and/or Registration Rollers are worn. Paper is not being picked up consistently.	Inspect all paper path rollers, looking for wear, cracks, or glazing. Replace the worn rollers.

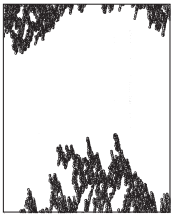

Table 7-36. Bubble Print

Possible Cause	Recommended Action
1. Photosensitive drum inside toner cartridge is not grounded.	1. Check for proper mounting of the High Voltage Power Supply (HVPW) and the HVPS ground contacts on the toner cartridge. 2. Check for proper seating of toner cartridge. 3. Replace the toner cartridge.
2. Toner cartridge is leaking.	Replace the toner cartridge.
3. Paper does not meet specifications. The moisture content, conductivity, or surface finish may not work correctly with the electrophotographic process.	Try a different paper lot (see *HP LaserJet Printer Family Paper Specifications Guide*).
4. High Voltage Power Supply is defective.	Replace the High Voltage Power Supply. See “High Voltage Power Supply (HVPS)” on page 219 for instructions.

Download Service Manual And Resetter Printer at http://printer1.blogspot.com

Table 7-37. White Stripes Parallel to Path

Possible Cause	Recommended Action
1. Toner cartridge is nearly empty. This can cause uneven toner distribution.	Remove the toner cartridge, and shake it gently. The cartridge will soon require replacement.
2. Toner cartridge has been exposed to too much light.	Store the toner cartridge in a darkened environment for several days. This may restore the photosensitive potential.
3. Foreign objects in beam path. Any foreign objects will block the light from developing an image on the Photosensitive drum.	Remove the toner cartridge, and check for damage. Replace the toner cartridge if it is damaged. Remove the printer cover, and inspect the path from the Laser/ Scanner to the toner cartridge drum, looking for foreign objects in the beam path.

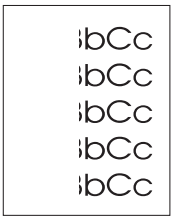

Table 7-38. Partial Blank Page

Possible Cause	Recommended Action
1. Page is too complex. The printer cannot create the image fast enough to keep pace with the print engine.	Set Page Protect to on or auto. Simplify print job.
2. Not enough memory. The page is too complex for standard printer memory.	Add printer memory. See “Memory and Personality Upgrade” on page 154 for instructions. As an alternative, simplify the print job.
3. Printing on legal-size paper from Tray 4 when software is specifying letter size (this will also cause paper jams).	Review software selection. Make sure that printing is on selected size.

Download Service Manual And Resetter Printer at http://printer1.blogspot.com

Table 7-39. Compressed Print

Possible Cause	Recommended Action
1. Toner cartridge bushings are too tight. This may occur on refilled toner cartridges.	Replace the toner cartridge.
2. Gear is broken or worn.	Inspect and replace the worn gear or assembly.

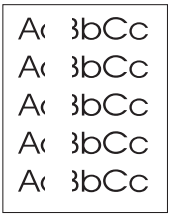

Table 7-40. Blank Portion in the Middle of the Page (Tray 4 Input only)

Possible Cause	Recommended Action
1. Bad clutch in vertical transfer door.	Replace the Tray 4 vertical transfer door.
2. Bad clutch in paper pickup assembly.	Replace Tray 4 paper pickup assembly.

Download Service Manual And Resetter Printer at http://printer1.blogspot.com

Repetitive Defect Ruler

Repetitive print defects are usually associated with a specific roller within the printer or the toner cartridge. Use figure 7-15 to isolate the cause of repetitive print defects. Align the first occurrence of the defect with the top of the “ruler” and measure to the next occurrence of the defect to determine the roller in question. When you are certain that your defect pattern matches the pattern of the ruler, replace the indicated roller.

Download Service Manual And Resetter Printer at http://printer1.blogspot.com

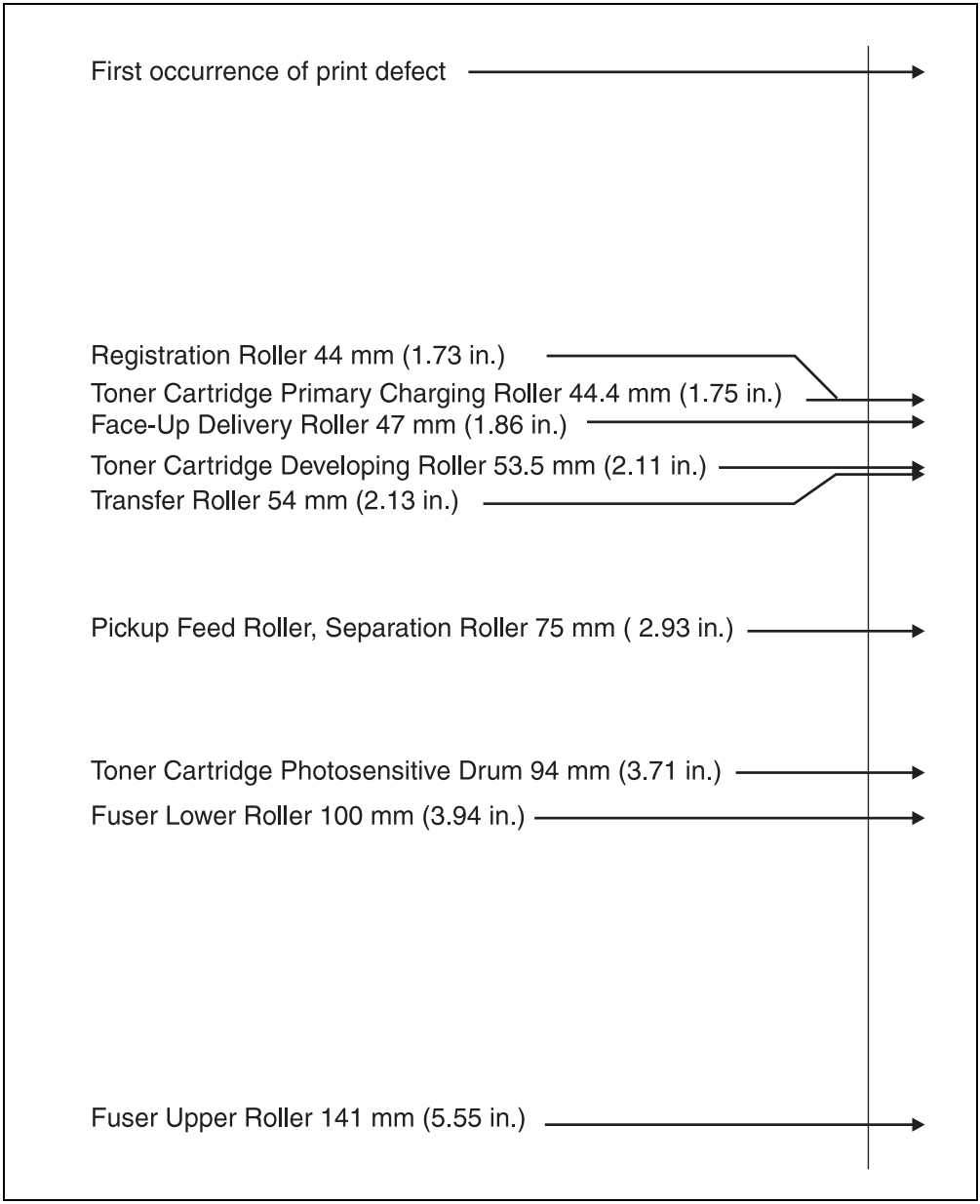

Figure 7-15 **Repetitive Defect Ruler**

Download Service Manual And Resetter Printer at http://printer1.blogspot.com

Image System Troubleshooting

Half Self Test Functional Check

The electrophotographic process can be subdivided into the following stages:

- Cleaning (removing excess toner from drum surface)
- Conditioning (placing a uniform electrical charge on drum)
- Writing (laser strikes surface of drum to create latent image)
- Development (formation of the toner image on drum)
- Transfer (charge to transfer the image to paper)
- Fusing (heat and pressure to produce a permanent image)

See Chapter 5 for more information.

The purpose of the Half Self Test Check is to determine which process is malfunctioning. Perform the test as follows:

1. Print a Configuration Page. See “Configuration Page” on page 468 for instructions.
2. Open the top cover after the paper advances half-way through the printer (about five seconds after the Main Motor begins rotating). The leading edge of the paper should have advanced past the toner cartridge.
3. Remove the toner cartridge.
4. Open the toner cartridge's drum shield to view the drum's surface.

   If a *dark and distinct toner image is present* on the drum's surface, assume that the first four functions of the electrophotographic process are functioning (cleaning, conditioning, writing, and developing—see Chapter 5), and troubleshoot the failure as a transfer or fusing problem.

   If *NO image is present* on the photosensitive drum, perform the functional checks on the following pages:

Download Service Manual And Resetter Printer at http://printer1.blogspot.com

Drum Rotation Functional Check

The photosensitive drum, located in the toner cartridge, must rotate for the print process to work. The photosensitive drum receives its drive from the Main Drive assembly. To verify whether the drum is rotating:

1. Open the top cover.
2. Remove the toner cartridge.
3. Mark the cartridge's drive gear with a felt-tipped marker. Note the position of the mark.
4. Install the toner cartridge, and close the top cover. The start-up sequence should rotate the drum enough to move the mark.
5. Open the printer, and inspect the gear that was marked in step 3. Verify that the mark moved. If the mark did not move, inspect the Main Drive assembly to make sure that it is meshing with the toner cartridge gears. If the drive gears appear functional, and the drum does not move, replace the toner cartridge.

Note This test is especially important if refilled toner cartridges have been used.

High-Voltage Power Supply Check

The High-Voltage Power Supply PCA provides the necessary voltages for the electrophotographic processes (see figure 7-16 on page 494). A method for verifying the high-voltage system is given below:

Toner cartridge connection points

Visually inspect the four connection points on the inside right end of the toner cartridge. If they are dirty or corroded, clean the connections. Clean using only alcohol. If damaged, replace the toner cartridge.

High voltage contacts

The high voltage contact springs mount on the High Voltage Power Supply PCA and protrude through the toner cartridge cavity to contact the toner cartridge. Verify that the contacts are not dirty or corroded and that the spring action is functional. If dirty, clean using only alcohol. If damaged, replace the High Voltage Power Supply PCA (see “High Voltage Power Supply (HVPS)” on page 219 for instructions).

Download Service Manual And Resetter Printer at http://printer1.blogspot.com

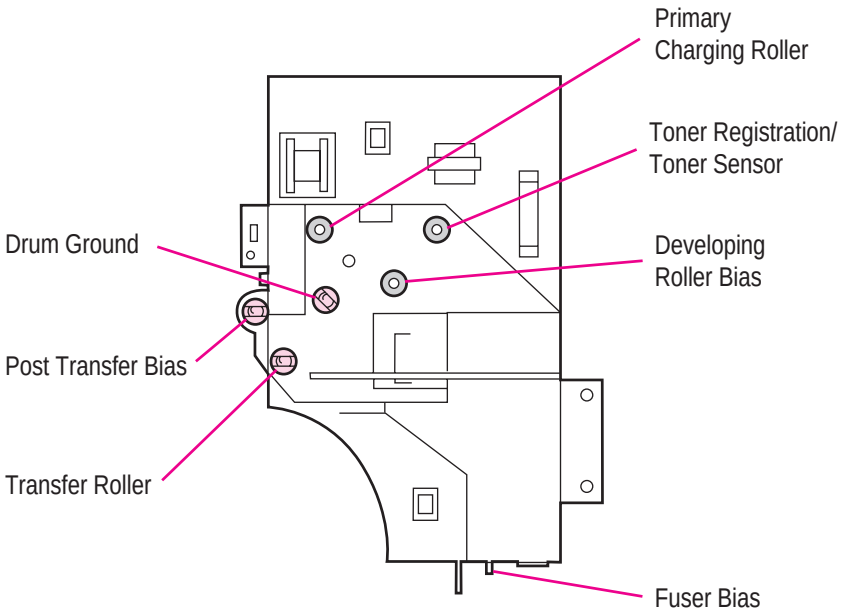

Figure 7-16 **High Voltage Power Supply Contacts**

Download Service Manual And Resetter Printer at http://printer1.blogspot.com

Network Troubleshooting

This section provides an overview of the printer's interface requirements.

Note Communication problems are normally the customer's responsibility. Time spent attempting to resolve these problems may not be covered by the product's Hewlett-Packard warranty.
Refer the customer to the network administrator for assistance in troubleshooting network problems.

Test Message

After the printer is installed, verify communications between the printer and the IBM-compatible computer. Enter the following at the DOS prompt:

`C:\DIR>LPT1` ENTER (for printing to parallel port #1)

The printer should print a directory listing of the C:\ directory.

EIO Troubleshooting

The JetDirect Configuration Page shown in figure 7-17 on page 496 contains valuable information about the current status of the EIO accessories. Before attempting to troubleshoot a network problem or notifying your network consultant of a problem, always print a Configuration Page from the Control Panel's Information Menu. If an EIO accessory is installed, the JetDirect Configuration Page prints too.

See the *HP JetDirect Network Interface Configuration Guide* for detailed explanations of network issues.

Download Service Manual And Resetter Printer at http://printer1.blogspot.com

HP LaserJet *8100 series printer*

HEWLETT PACKARD

EIO 1 - JETDIRECT PAGE 1

JetDirect Configuration Page

Network statistics

GENERAL INFORMATION

```
HP JETDIRECT              J3113A
FIRMWARE REVISION:        G.06.00
LAN HW ADDRESS:      0060B09BD1D8
PORT SELECT:                 RJ45
PORT CONFIG:        10BASE-T HALF
AUTO NEGOTIATION:             ON
MFG ID:            38053805900600

I/O CARD READY
```

I/O card status

```
NETWORK STATISTICS
UNICAST PACKETS RCVD:          7
TOTAL PACKETS RCVD:          183
BAD PACKETS RCVD:              1
FRAMING ERRORS RCVD:           0
PACKETS TRANSMITTED:          86
UNSENDABLE PACKETS:            0
XMIT COLLISIONS:               0
XMIT LATE COLLISIONS:          0
```

PROTOCOL INFORMATION

```
SNMP SET CMTY NAME:          NONE

TCP/IP STATUS:              READY
```

IP address

```
HOST NAME:               NPI9BD1D8
CONFIG BY:                    DHCP
IP ADDRESS:        205.168.111.34
SUBNET MASK:        255.255.255.0
DEF. GATEWAY:      205.168.111.10
SYSLOG SERVER:      NOT SPECIFIED
IDLE TIMEOUT (SECONDS):        90
BOOTP/DHCP SERVER: 205.168.111.2
CONFIG FILE:        NOT SPECIFIED

WEBJA SERVER:       NOT SPECIFIED

IPX/SPX STATUS:                16
  NOT CONFIGURED
MODE:               QUEUE SERVER
NODE NAME:
  NPI9BD1D8
```

Node name

```
APPLETALK STATUS:           READY
ETALK NET:   301 NODE: 004  P2

APPLETALK NAME:  HP LaserJet 810
0 series printer
ETALK ZONE:  ile-tc

DLC/LLC STATUS:             READY
```

IPX/SPX status

```
IPX/SPX RETRANS:               0
NETWORK  FRAME TYPE        RCVD
UNKNOWN  EN_802.2             1
UNKNOWN  EN_II                1
00003020 EN_802.3           137
```

Figure 7-17 **Sample JetDirect Configuration Page**

Download Service Manual And Resetter Printer at http://printer1.blogspot.com

- If the EIO JetDirect Card has successfully powered up and completed its internal diagnostics, the `I/O CARD READY` message will appear. If communication is lost, an `I/O NOT READY` message appears followed by a two digit error code. Consult the *HP JetDirect Network Interface Configuration Guide* for further details and recommended action.
- The “Network Statistics” column indicates the status of network activity. Bad packets, framing errors, un-sendable packets, and collisions should be minimal. If a high percentage (greater than one percent) of these occur, contact the network administrator. All of the statistics are set to zero when the printer is powered off.
- A “Novell Status” block should state the Novell printer server name to which the printer is connected. If the node name reads “NPIxxxxxx” (xxxxxx = last six digits of the EIO's LAN address), the EIO card has not been configured for a Novell server (as in figure 7-17). This could indicate that the card is operating under an IPX protocol other than Novell. Consult with the network administrator if the Node Name is not present.
- In the TCP/IP protocol block, the default IP address is “192.0.0.192.” It is acceptable to operate the printer with this default address. The error message, `ARP DUPLICATE IP ADDRESS` may appear in this block. This is also an acceptable error code if the TCP/IP protocol is not being used. Please check with the network administrator to determine the correct IP address for the printer.

Verify Host System Operation

Try to print to another known working printer or move the failing printer to a known working location. Verify that the correct driver is installed and operating properly.

Verify Network and Server Operation

- Try to print the job to the printer's parallel port.
- Try to print from the host system through the network to another printer. Contact the network administrator for assistance.

Download Service Manual And Resetter Printer at http://printer1.blogspot.com

Diagrams

This section contains the following diagrams:

- Figure 7-18, “Printer Sensors and Switches,” on page 499
- Figure 7-19, “Printer Motor, Clutches, and Solenoids,” on page 500
- Figure 7-20, “DC Controller Inputs and Outputs (1 of 5),” on page 501
- Figure 7-21, “DC Controller Inputs and Outputs (2 of 5),” on page 502
- Figure 7-22, “DC Controller Inputs and Outputs (3 of 5),” on page 503
- Figure 7-23, “DC Controller Inputs and Outputs (4 of 5),” on page 504
- Figure 7-24, “DC Controller Inputs and Outputs (5 of 5),” on page 505
- Figure 7-25, “Mailbox with Stapler Wiring Diagram,” on page 506
- Figure 7-26, “2000-sheet Input Tray Controller PCA Inputs,” on page 507
- Figure 7-27, “2000-sheet Input Tray Controller PCA Outputs,” on page 508
- Figure 7-28, “2000-sheet Input Tray Main Wiring Diagram,” on page 509
- Figure 7-29, “8-bin Mailbox Main Wiring Diagram,” on page 510

- The main wiring diagram is inserted inside the cover.

Download Service Manual And Resetter Printer at http://printer1.blogspot.com

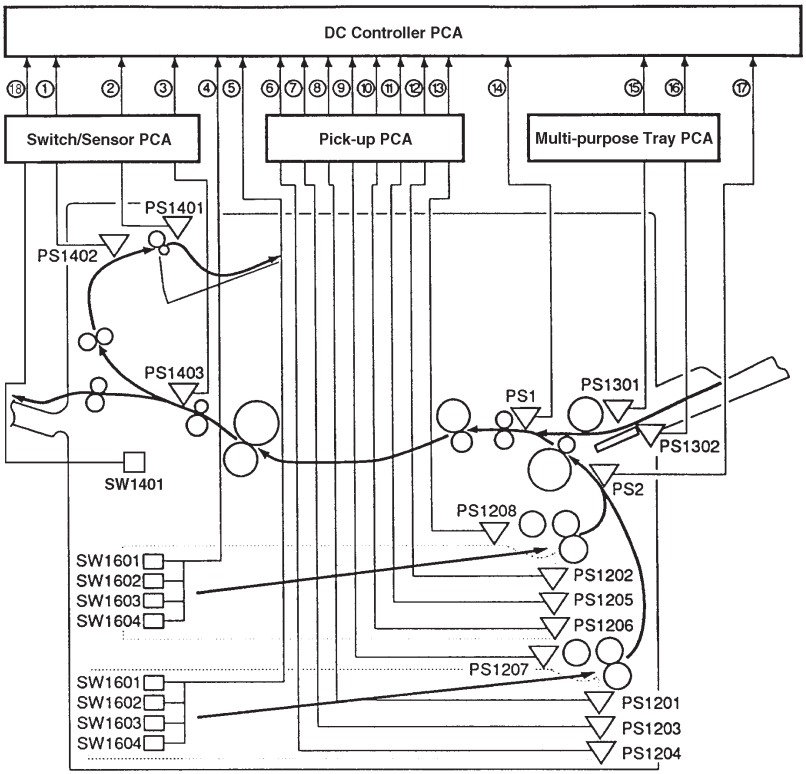

① : FACE-DOWN TRAY DELIVERY SENSE signal (/FDOUTS)
② : FACE-DOWN TRAY PAPER FULL SENSE signal (/FDDULS)
③ : FUSING UNIT DELIVERY SENSE signal (FPOUTS)
④ : TRAY 2 PAPER SIZE SENSE signal
⑤ : TRAY 3 PAPER SIZE SENSE signal
⑥ : TRAY 3 PAPER-LEVEL SENSE signal 1 (LVPS1)
⑦ : TRAY 3 PAPER-LEVEL SENSE signal 2 (LVPS2)
⑧ : TRAY 3 SENSE signal (/LDECKC)
⑨ : TRAY 3 PAPER-OUT SENSE signal (/LDECKS)
⑩ : TRAY 2 PAPER-LEVEL SENSE signal 1 (UPVS1)
⑪ : TRAY 2 PAPER-LEVEL SENSE signal 2 (UPVS2)
⑫ : TRAY 2 SENSE signal (/UDECKC)
⑬ : TRAY 2 PAPER-OUT SENSE signal (/UDECKS)
⑭ : REGISTRATION PAPER SENSE signal (/REGS)
⑮ : TRAY 1 PAPER SENSE signal (/MPTPS)
⑯ : LIFTING PLATE SENSE signal (/MPTLS)
⑰ : PICK-UP UNIT PAPER SENSE signal (/FEEDS)
⑱ : TOP/LEFT DOOR OPEN signal (UDOORS)

PS1: Registration paper sensor
PS2: Pick-up unit paper sensor
PS1201: Tray 3 present sensor
PS1202: Tray 2 present sensor
PS1203: Tray 3 paper-level sensor 1
PS1204: Tray 3 paper-level sensor 2
PS1205: Tray 2 paper-level sensor 1
PS1206: Tray 2 paper-level sensor 2
PS1207: Tray 3 paper-out sensor
PS1208: Tray 2 paper-out sensor
PS1301: Tray 1 paper present sensor
PS1302: Lifting plate position sensor
PS1401: Face-down tray paper full sensor
PS1402: Face-down tray delivery sensor
PS1403: Fixing unit delivery sensor
SW1601: Paper-size sensing switch
SW1602: Paper-size sensing switch
SW1603: Paper-size sensing switch
SW1604: Paper-size sensing switch
SW1401: Doors open switch

Figure 7-18 Printer Sensors and Switches

Download Service Manual And Resetter Printer at http://printer1.blogspot.com

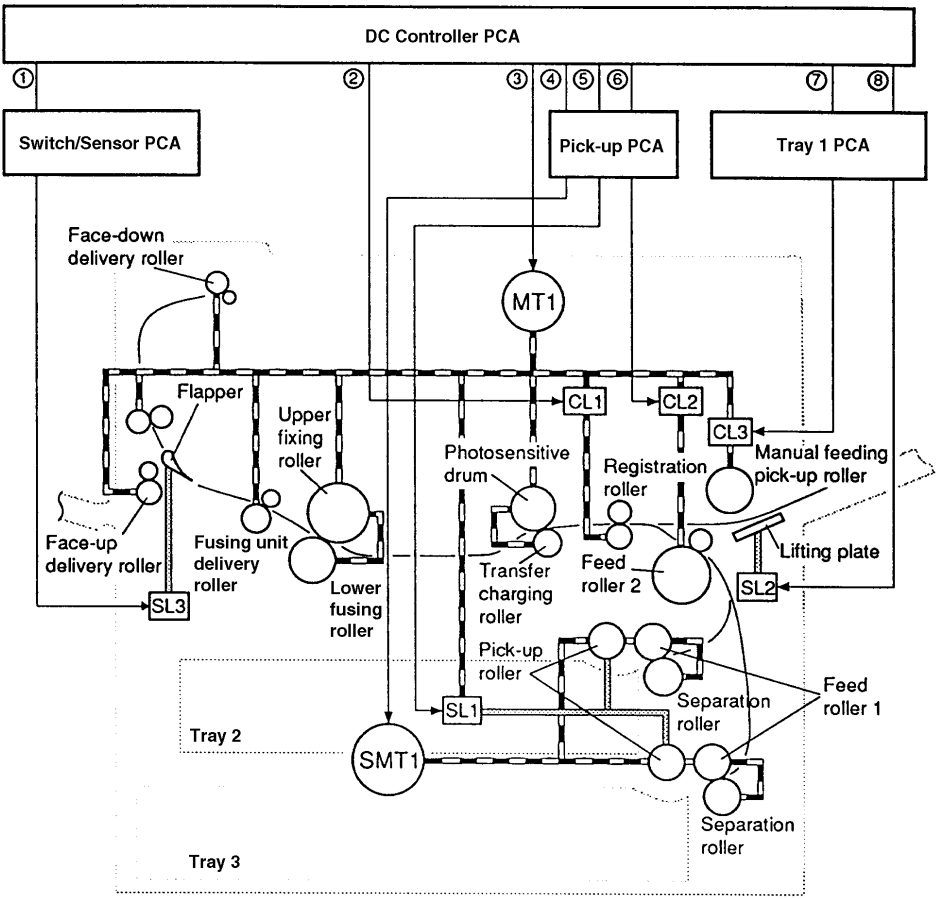

Figure 7-19 **Printer Motor, Clutches, and Solenoids**

Download Service Manual And Resetter Printer at http://printer1.blogspot.com

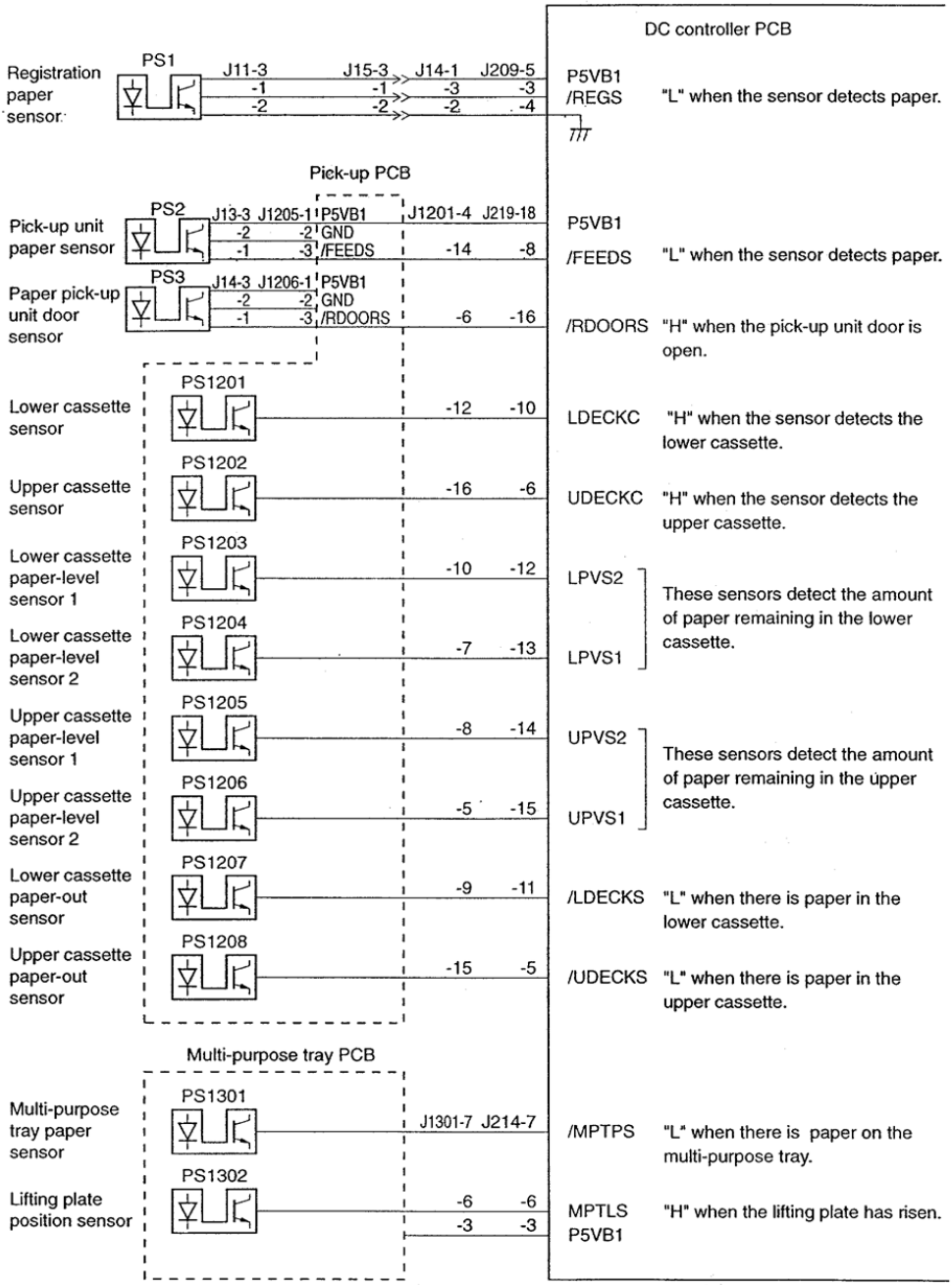

Figure 7-20 **DC Controller Inputs and Outputs (1 of 5)**

Download Service Manual And Resetter Printer at http://printer1.blogspot.com

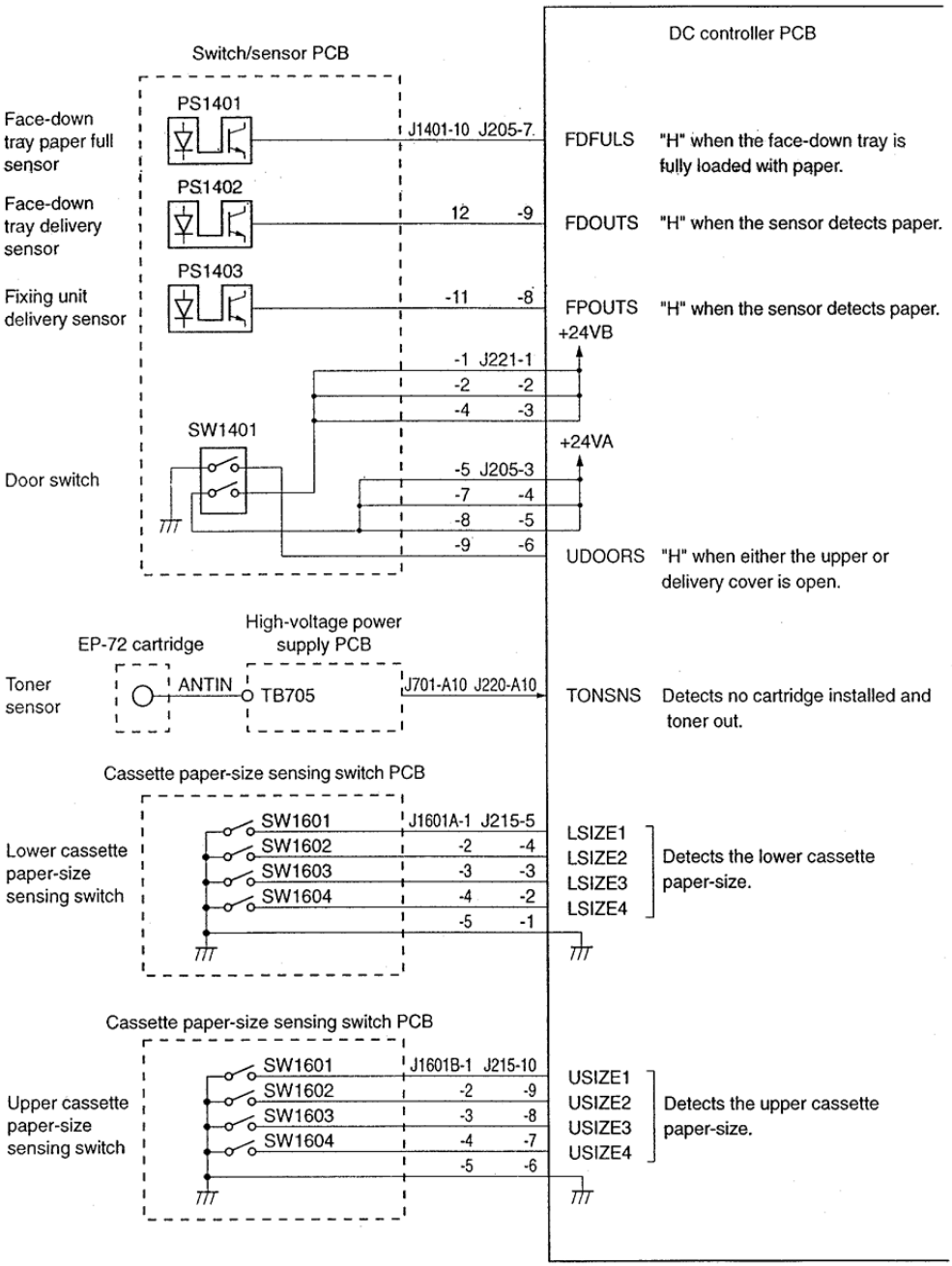

Figure 7-21 **DC Controller Inputs and Outputs (2 of 5)**

Download Service Manual And Resetter Printer at http://printer1.blogspot.com

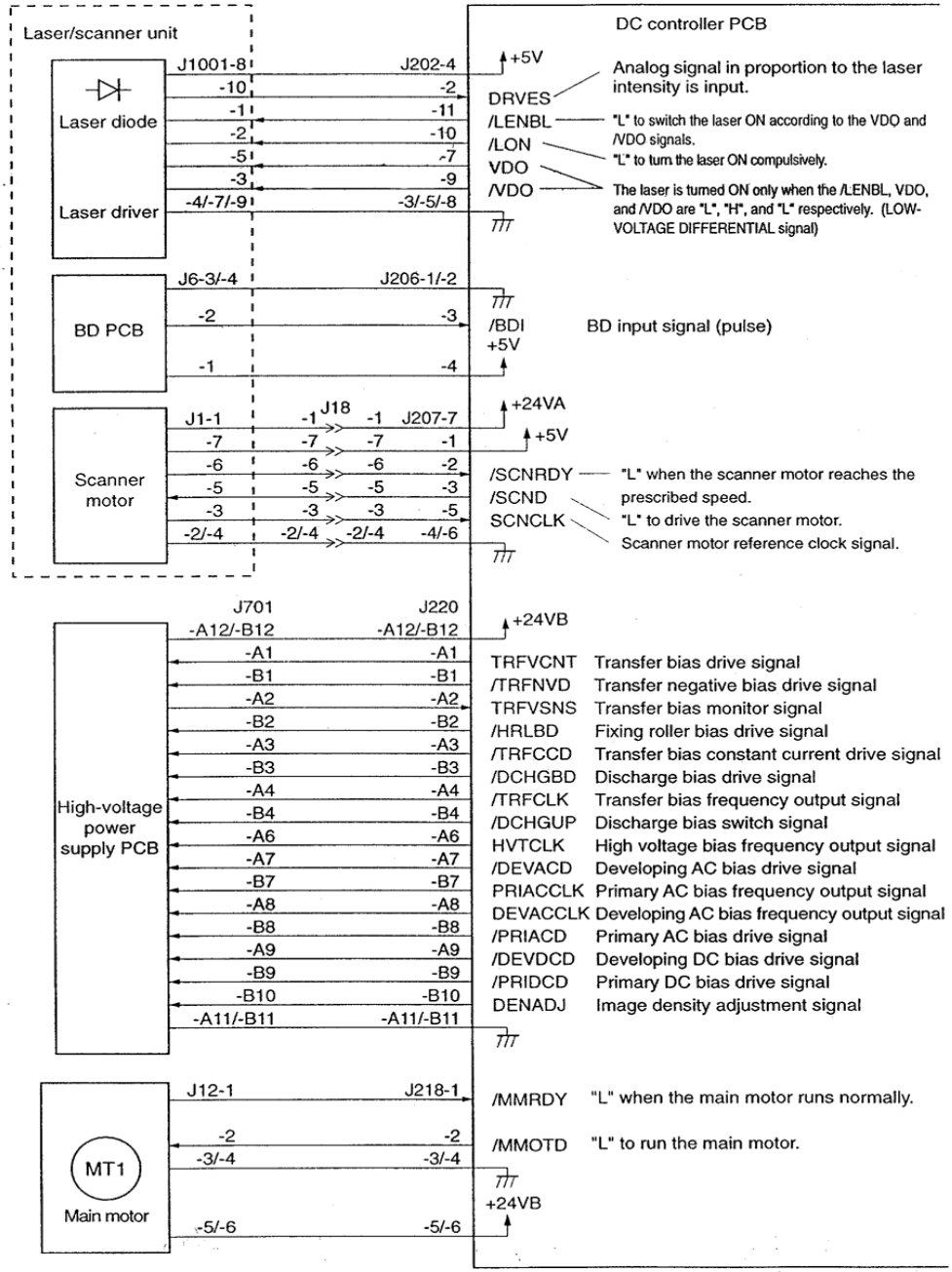

Figure 7-22 **DC Controller Inputs and Outputs (3 of 5)**

Download Service Manual And Resetter Printer at http://printer1.blogspot.com

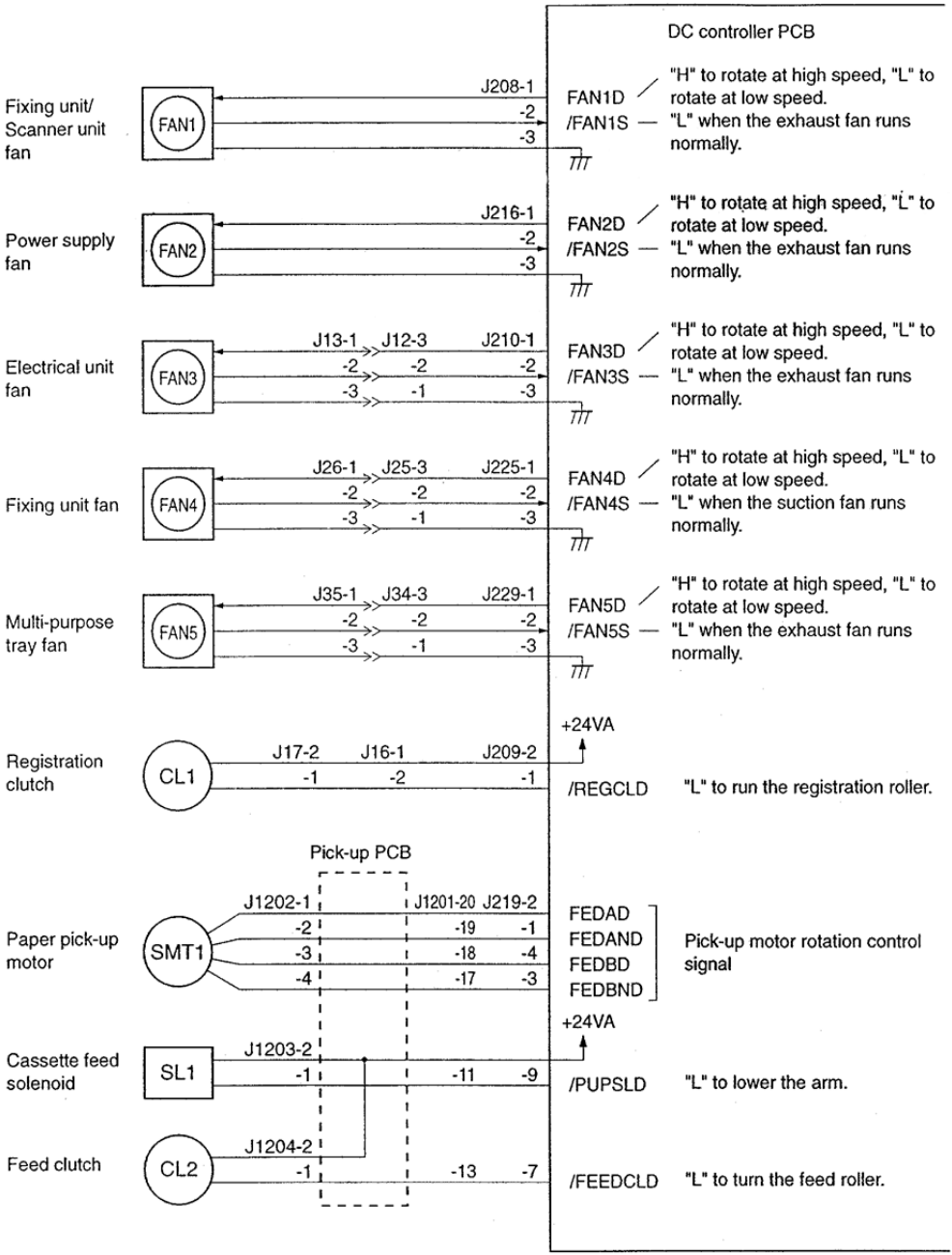

Figure 7-23 **DC Controller Inputs and Outputs (4 of 5)**

Download Service Manual And Resetter Printer at http://printer1.blogspot.com

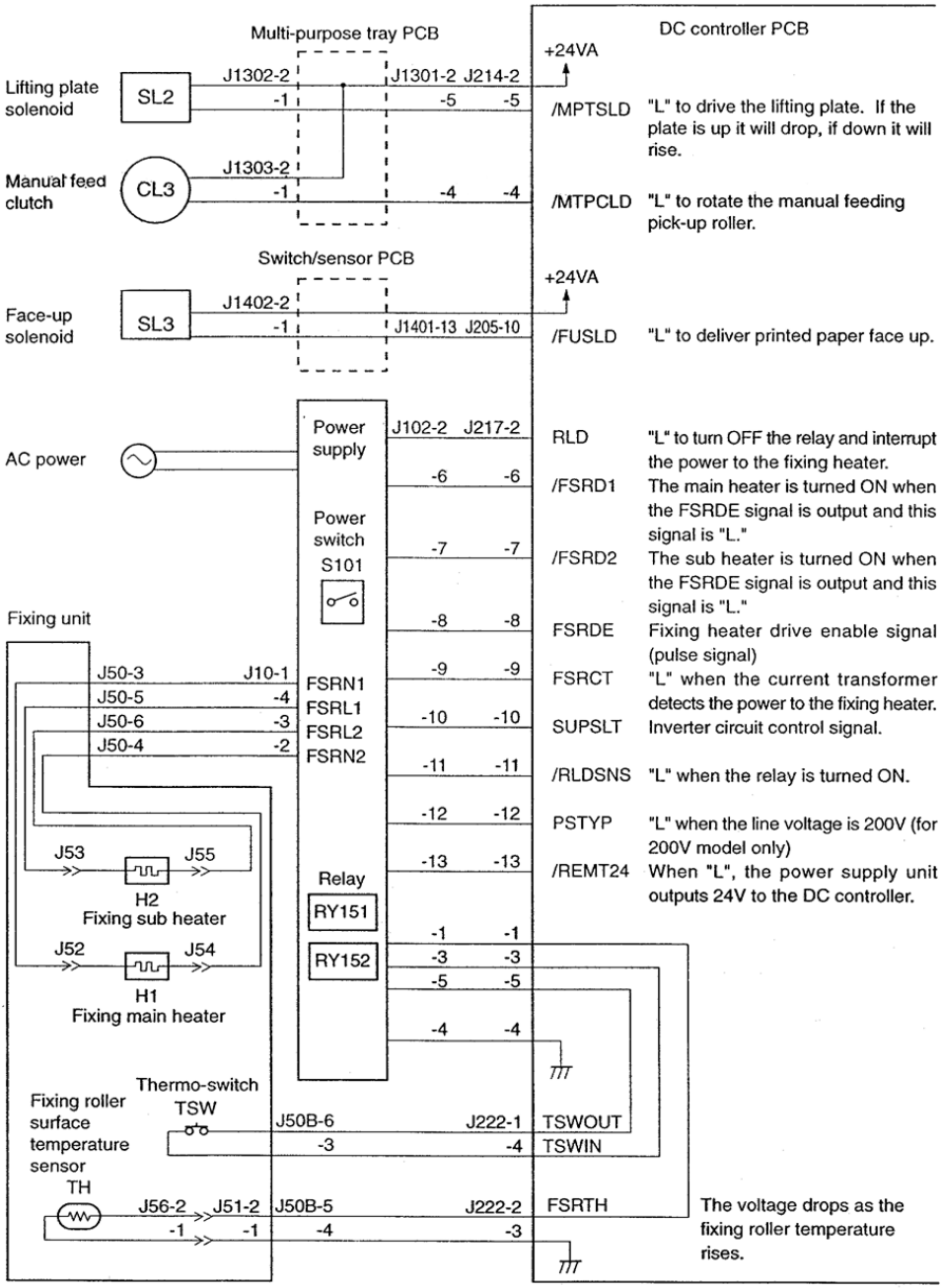

Figure 7-24 **DC Controller Inputs and Outputs (5 of 5)**

Download Service Manual And Resetter Printer at http://printer1.blogspot.com

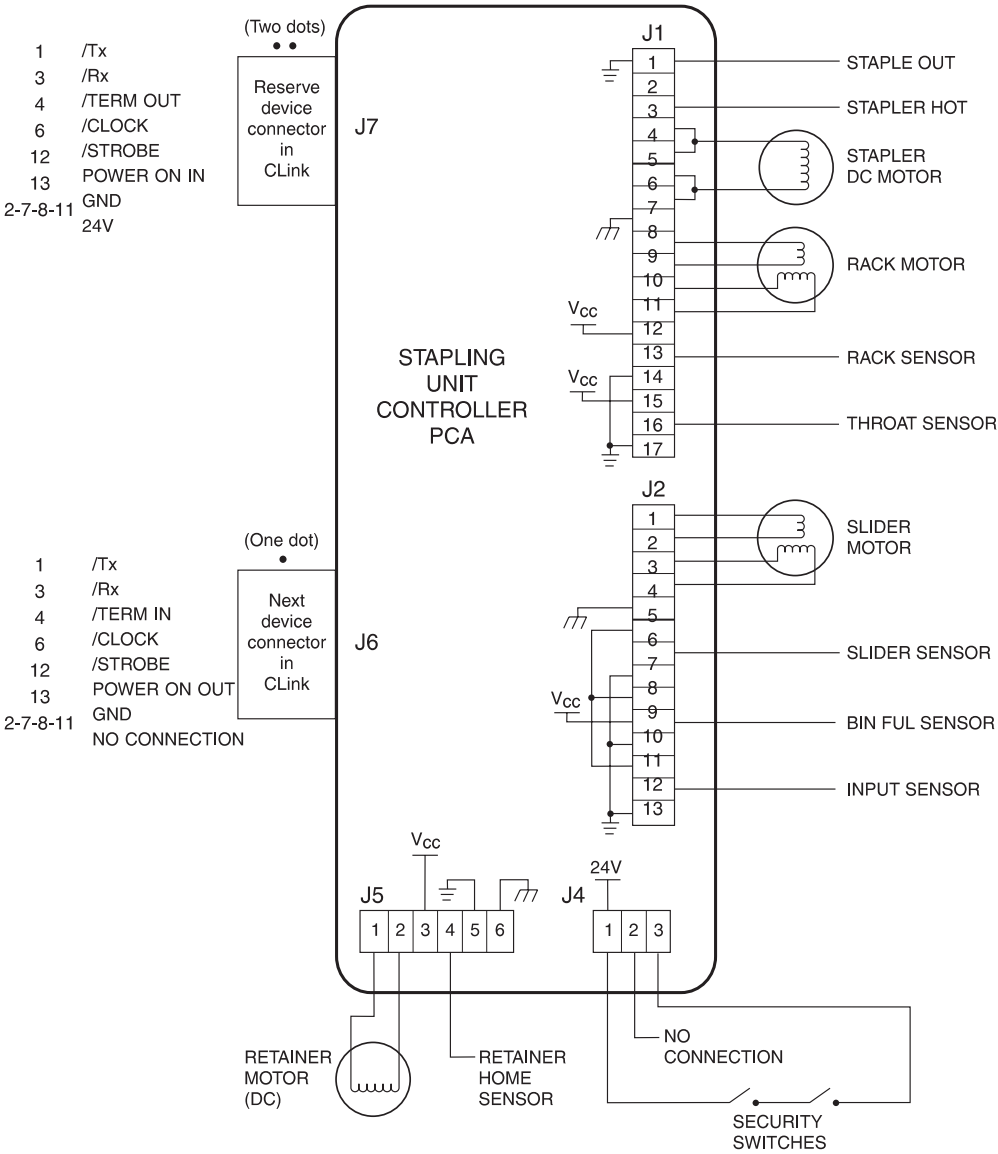

Figure 7-25 **Mailbox with Stapler Wiring Diagram**

Download Service Manual And Resetter Printer at http://printer1.blogspot.com

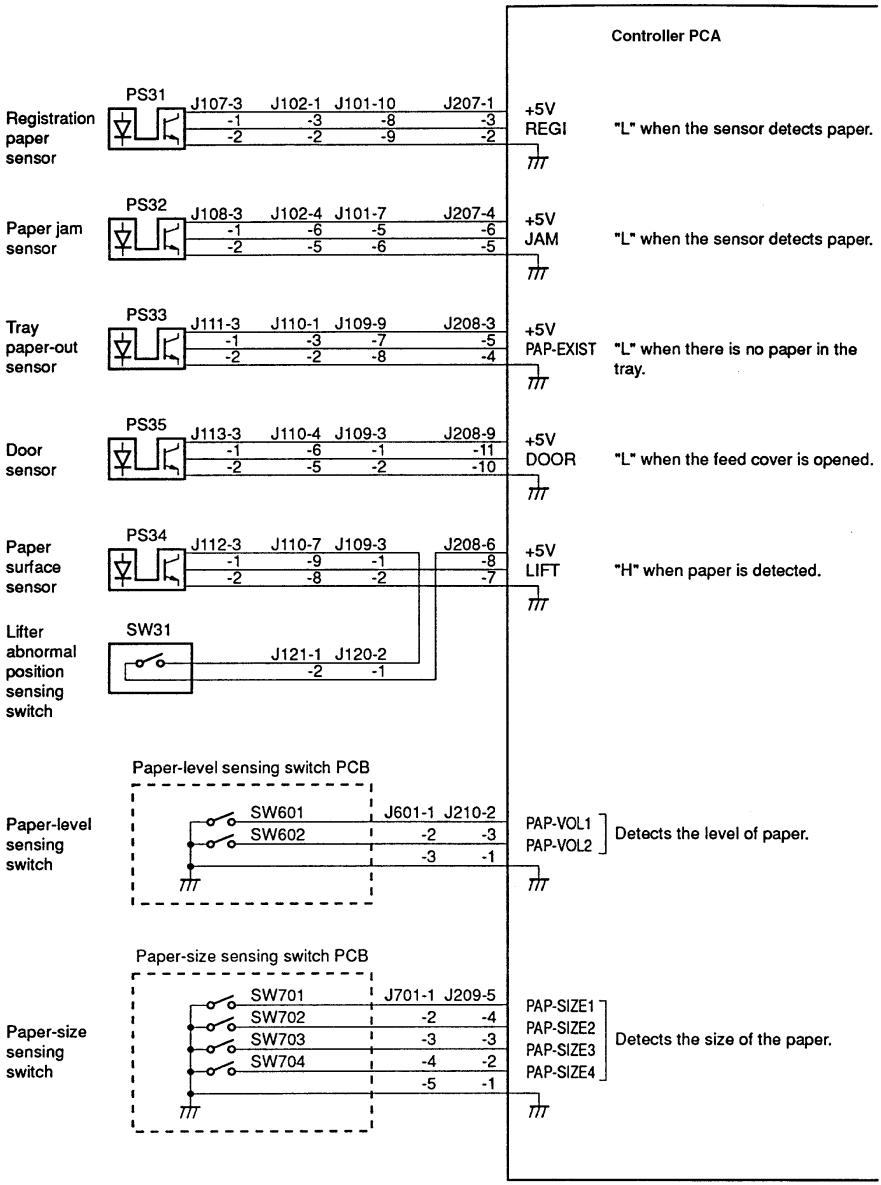

Figure 7-26 **2000-sheet Input Tray Controller PCA Inputs**

Download Service Manual And Resetter Printer at http://printer1.blogspot.com

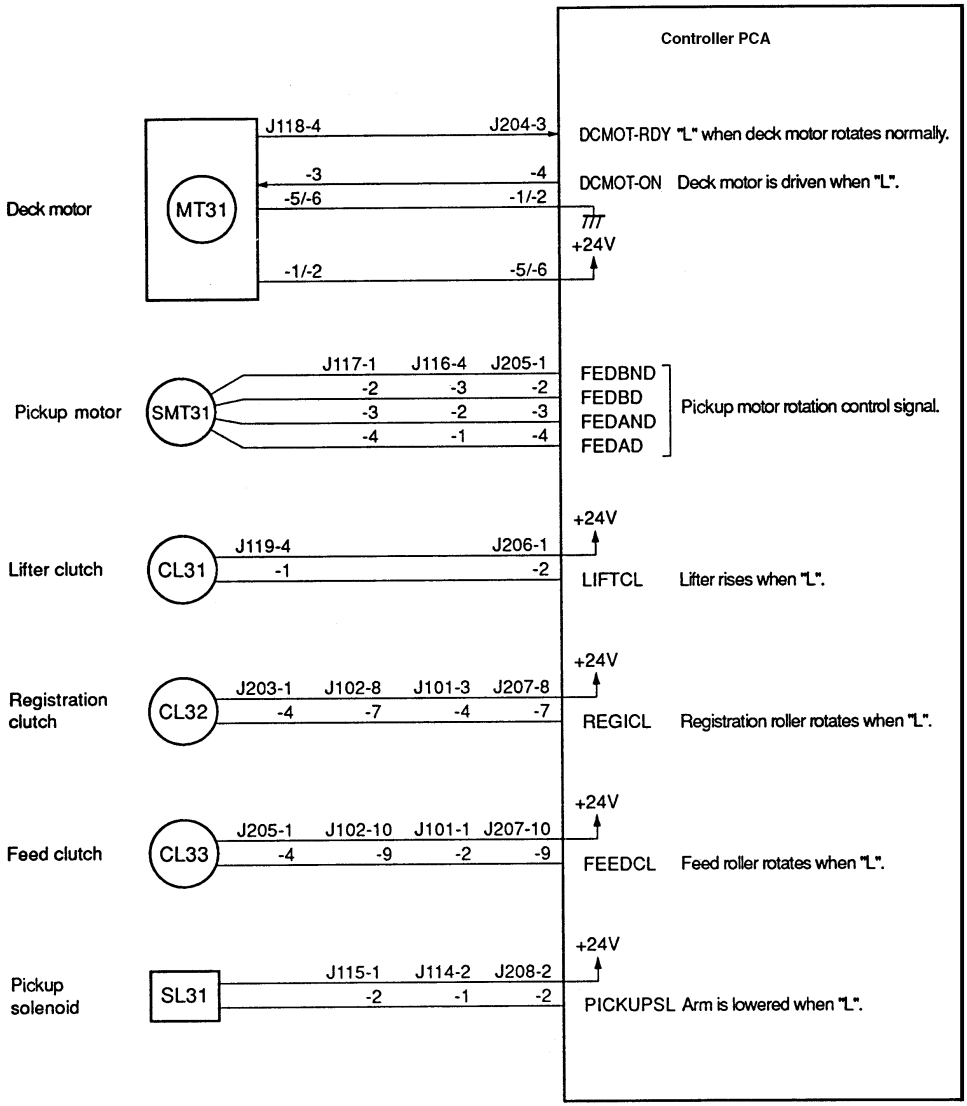

Figure 7-27 **2000-sheet Input Tray Controller PCA Outputs**

Download Service Manual And Resetter Printer at http://printer1.blogspot.com

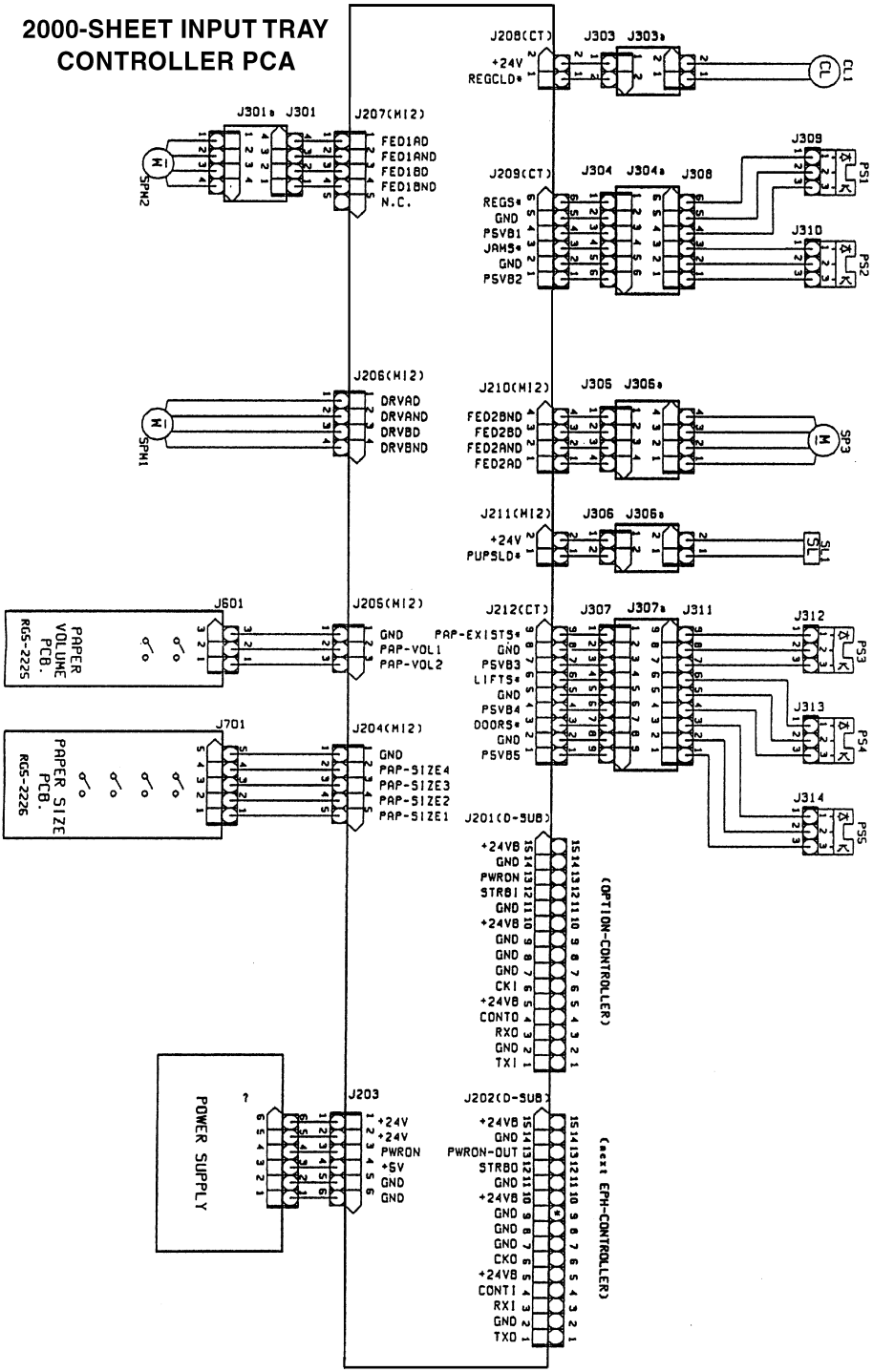

Figure 7-28 **2000-sheet Input Tray Main Wiring Diagram**

Download Service Manual And Resetter Printer at http://printer1.blogspot.com

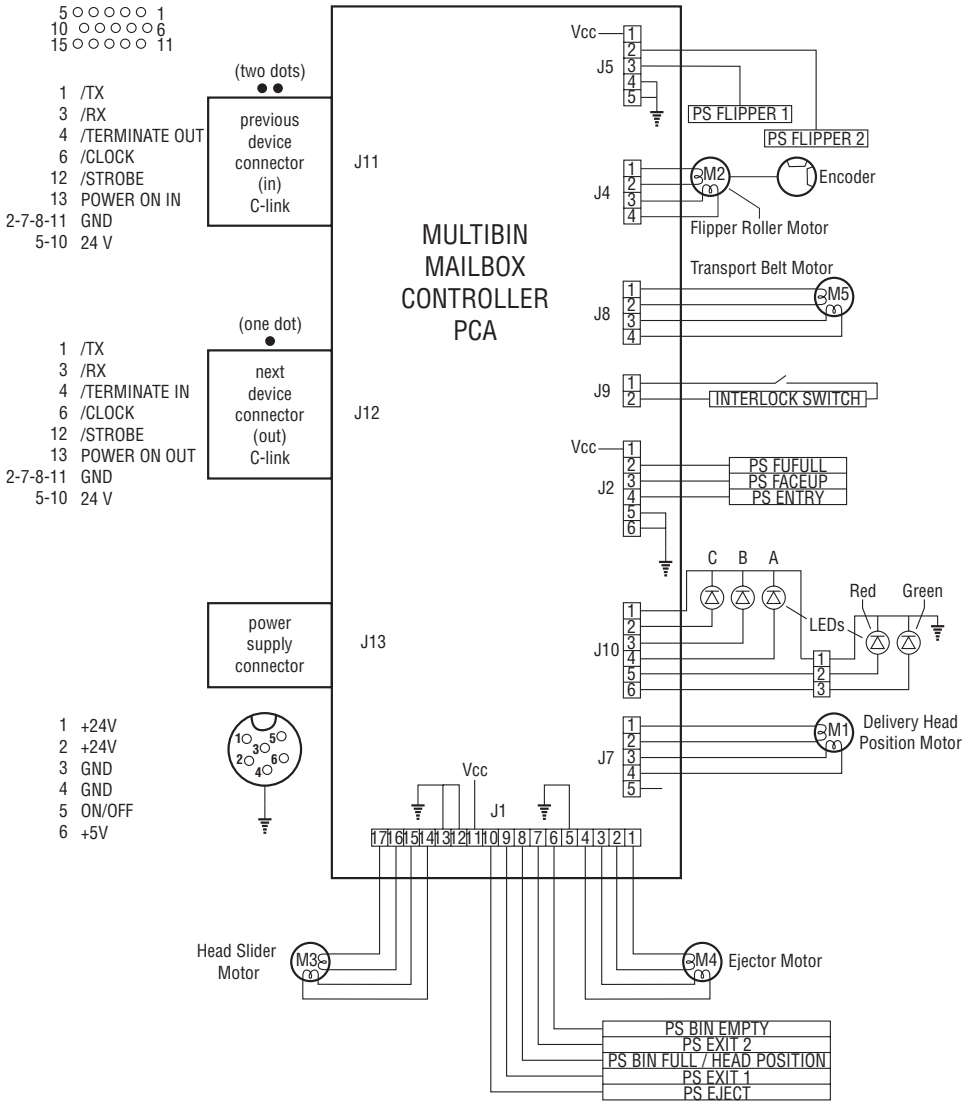

Figure 7-29 **8-bin Mailbox Main Wiring Diagram**

Download Service Manual And Resetter Printer at http://printer1.blogspot.com

8 Parts and Diagrams

Chapter contents

How to Use the Part Lists and Diagrams - - - - - - - - - - 512
Accessories and Supplies - - - - - - - - - - - - - - - - - - 513
HP LaserJet 8100/8100N/8100DN Printer and Paper-Handling Components - 514
Printer Covers and Doors - - - - - - - - - - - - - - - - - - 518
Printer Internal Components (1 of 4) - - - - - - - - - - - - 520
Detail of Assemblies - 528
PCB Assembly Location Diagram- - - - - - - - - - - - - - 530
Face-up Solenoid Assembly - - - - - - - - - - - - - - - - 531
2000-sheet Input Tray Components (1 of 2) - - - - - - - - 532
8-bin Mailbox Components (1 of 3) - - - - - - - - - - - - 536
Stapler Internal Components - - - - - - - - - - - - - - - - 542
2 x 500-sheet Input Tray Internal Components - - - - - - 545
7-bin Tabletop Mailbox Internal Components - - - - - - - 547
Alphabetical Parts List - - - - - - - - - - - - - - - - - - - 549
Numerical Parts List - 559

Download Service Manual And Resetter Printer at http://printer1.blogspot.com

How to Use the Part Lists and Diagrams

The figures in this chapter illustrate the major subassemblies and their component parts. Each table lists the reference designator (item number) for each part, the associated part number for the item, the quantity, and a description of the part.

While looking for a part number, pay careful attention to the voltage listed in the description column to ensure that the part number selected is for the correct model of printer.

Note Parts that have no item or part number listed are not field-replaceable parts and cannot be ordered.

Ordering Parts

All standard part numbers listed are stocked and may be ordered from HP's PSD/SMO or PSD/SME.

Hewlett-Packard Co. Product Support Division/Support Materials Organization 8050 Foothills Blvd. Roseville, CA 95678 Parts Direct Ordering 1-800-227-8164 (U.S. Only)
Hewlett-Packard Co. Product Support Division/Support Materials, Europe Wolf-Hirth Strasse 33 D-7030 Böblingen, Germany (49 7031) 14-2253

Contact your local HP Parts Coordinator for other local phone numbers.

Download Service Manual And Resetter Printer at http://printer1.blogspot.com

Accessories and Supplies

The accessories, supplies, and parts listed in Chapter 1 and in the following pages are available through your local authorized HP dealer. To find a dealer near you (or if your dealer is temporarily out of stock), call the HP Customer Information Center (800) 752-0900 (U.S. Only).

Note See Chapter 1 "Technical Assistance" for documentation and training media product numbers.

Common Hardware

See table 6-1 in Chapter 6 for a list of the common hardware used in the printer.

Illustrations and Parts Lists

The following illustrations and their associated parts tables list the field-replaceable components for this printer. Where applicable, the exchange part number is listed immediately following the original equipment part numbers. This chapter also provides two cross-reference tables of all the parts listed in this chapter: Table on page 549 lists the parts in alphabetical order, and Table 8-18 on page 549 lists the parts in numerical order. Both tables are cross-referenced to the appropriate figure and reference designator in this chapter.

Download Service Manual And Resetter Printer at http://printer1.blogspot.com

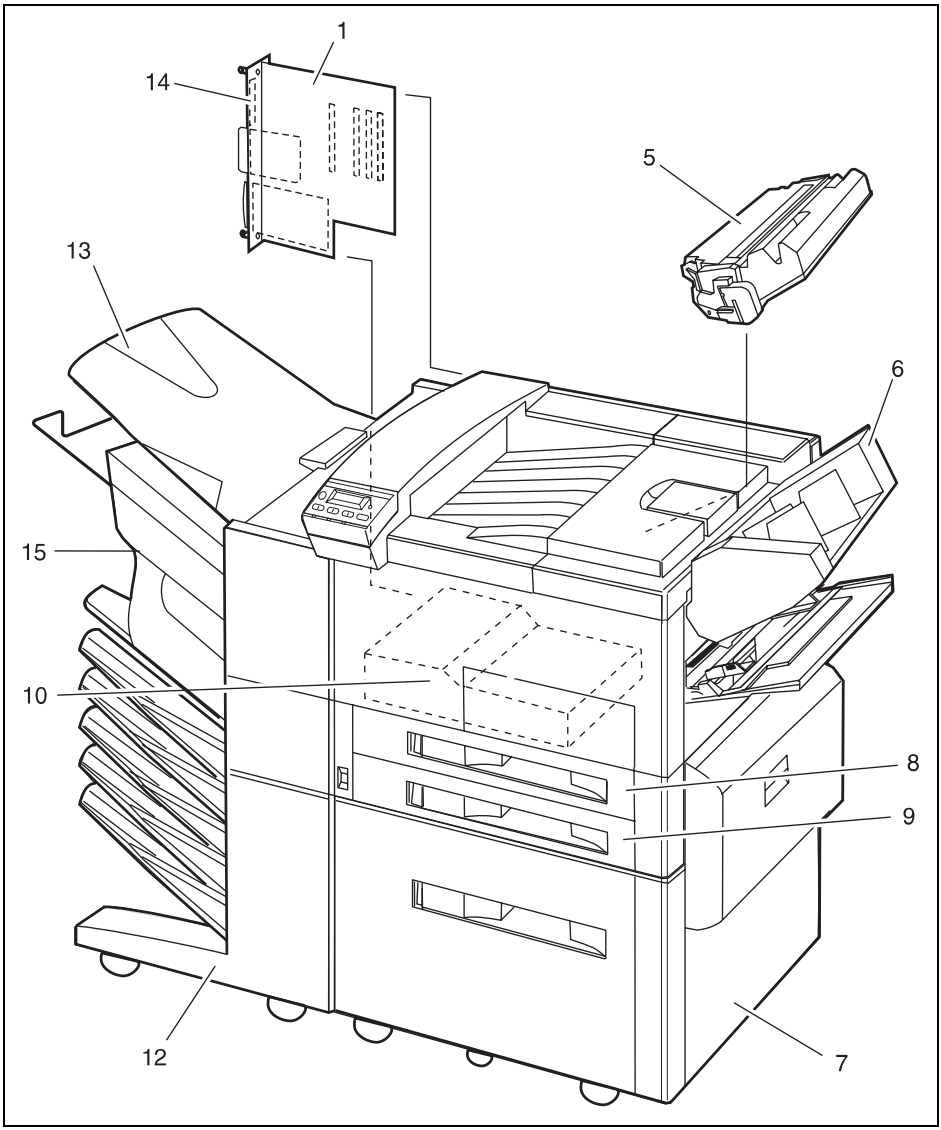

Figure 8-1 **HP LaserJet 8100/8100N/8100DN Printer and Paper-Handling Components**

Download Service Manual And Resetter Printer at http://printer1.blogspot.com

Table 8-1. Printer and Paper-Handling Components

Ref	Description/Product Number	Part/Exchange Number	QTY
01	Formatter Assembly	C4107-67901	
01A	Formatter Assembly, Exchange	C4107-69001 (ex.)	
05	Toner Cartridge/C4182X		
06	Envelope Feeder/C3765B	C3765-60501	1
07	2000-sheet Input Tray (Tray 4)/C4781A	R95-3002-000CN	1
not shown	2 x 500-sheet Input Tray (Tray 4 and 5)/C4780A	R95-3003-000CN	
08	Tray 2	RG5-3951-000CN	1
09	Tray 3	RG5-3952-000CN	1
not shown	Paper Size Guide (Trays 2 and 3)	RF5-1484-000CN	1
not shown	Paper Size Guide Label (Trays 2 and 3)	RS5-8605-000CN	1
10	Duplexer/C4782A	C4782-60501 C4782-69501 (ex.)	1
12	8-bin Mailbox/C4785A		1
12	5-bin Mailbox with Stapler/C4787A		1
12	5-bin Mailbox for Stapler/C4787A (5-bin Mailbox only, without the Stapler Unit.)	C4787-60502 C4787-69502 (ex.)	1
13	Face-up Bin	RB1-6491-000CN	1
14	EIO Coverplate	5182-5899	3
15	Stapler Assembly	C4787-60500	1
not shown	7-bin Tabletop Mailbox/C4783A	R95-3007-000CN	1
not shown	Stand for 7-bin Tabletop Mailbox/C4784A	C4784-60500	1
not shown	Packaging Kit, Printer	5041-9238	
not shown	Packaging Kit, duplexer	C3762-60500	
not shown	Packaging Kit, 2000-sheet Input Tray	C3763-60500	
not shown	Packaging Kit, 8-bin Mailbox	C3764-60500	
not shown	Packaging Kit, Envelope Feeder	C3765-60500	
not shown	Maintenance Kit, 100-120V/C3914A	C3914-69001 (ex.)	
not shown	Maintenance Kit, 220-240V/C3915A	C3915-69001 (ex.)	
not shown	C-link Cable Assembly 61 cm (Engine to 2000-sheet Input Tray)	C3763-60502	
not shown	C-link Cable Assembly 97 cm (8-bin Mailbox to Stapler)	C3766-60539	
not shown	Stapler Cartridges (3-pack)/C3772A		

Download Service Manual And Resetter Printer at http://printer1.blogspot.com

Table 8-1. Printer and Paper-Handling Components (continued)

Ref	Description/Product Number	Part/Exchange Number	QTY
not shown	Power Box (includes bracket clip)	C4781-60500	
not shown	Jumper Cable, Short	C4781-60501	
not shown	Jumper Cable, Long	C4781-60502	

Download Service Manual And Resetter Printer at http://printer1.blogspot.com

Download Service Manual And Resetter Printer at http://printer1.blogspot.com

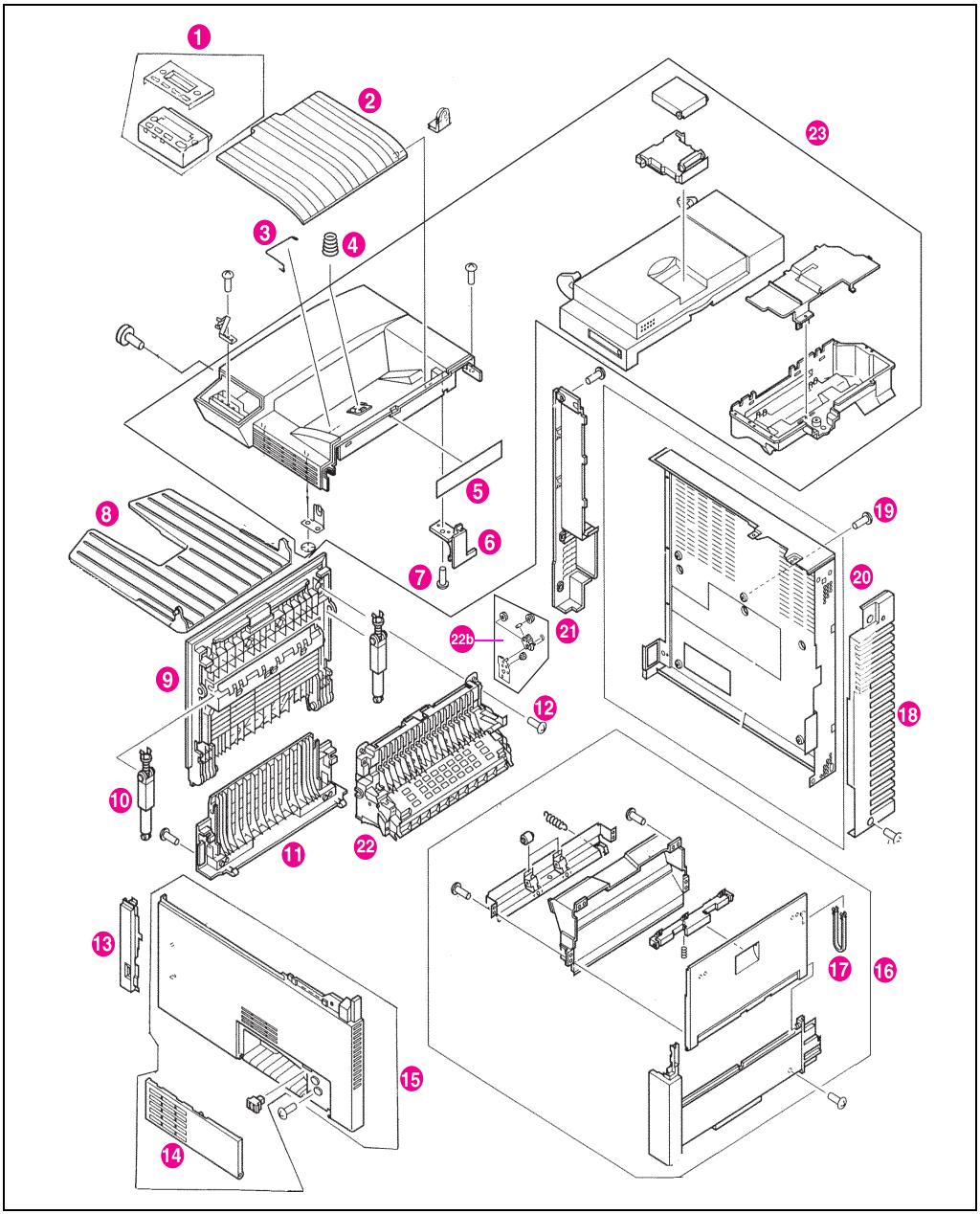

Figure 8-2 **Printer Covers and Doors**

Download Service Manual And Resetter Printer at http://printer1.blogspot.com

Table 8-2. Printer Covers and Doors

Ref	Description	Part Number	QTY
1	Display, Control Panel	RG5-4384-000CN	1
1a	Overlay, Control Panel (English)	C4214-40029	1
1a	Overlay, Control Panel (French)	C4214-40030	1
1a	Overlay, Control Panel (Italian)	C4214-40031	1
1a	Overlay, Control Panel (Portuguese)	C4214-40032	1
1a	Overlay, Control Panel (German)	C4214-40041	1
1a	Overlay, Control Panel (Spanish)	C4214-40042	1
2	Tray, Output-Face-down	RB1-6490-000CN	1
3	Spring, Torsion	RB1-6509-000CN	1
4	Spring, Compression	RB1-6493-000CN	1
5	Label, Operation	RS5-8676-000CN	1
6	Hinge Plate	RB2-3641-000CN	1
7	Screw, M4 x 10	XA9-0870-000CN	
8	Tray, Face-up	RB1-6491-000CN	1
9	Delivery Cover (Left Side F/U)	RB2-3558-000CN	1
10	Hinge, Stopper	RF5-2701-000CN	2
11	Cover, Left-Lower	RB1-6480-000CN	1
12	Screw, M4 x 8	XA9-0605-000CN	
13	Cover, Switch	RB1-6492-000CN	1
14	Front Cover (Duplex Jam Removal)	RB2-3626-000CN	1
15	Front Cover	RG5-4362-000CN	1
16	Right Cover Assembly	RG5-1915-000CN	1
17	Open/Close Stopper	RB1-6484-000CN	1
18	Right, Lower Cover (Rear Plastic on Sheet Metal)	RB2-3642-000CN	1
19	Screw, M3 x 8	XA9-0872-000CN	
20	Cover, Rear	RF5-1402-000CN	1
21	Electrical Cover (Rear by Formatter)	RB1-6489-000CN	1
22	Diverter Assembly	RG5-4325-000CN	1
22a (not shown)	Gear, 20T	RS5-1127-000CN	1
22b	Diverter Drive Assembly	RF9-1249-000CN	1
23	Top Cover Assembly	RG5-4360-000CN	1

Download Service Manual And Resetter Printer at http://printer1.blogspot.com

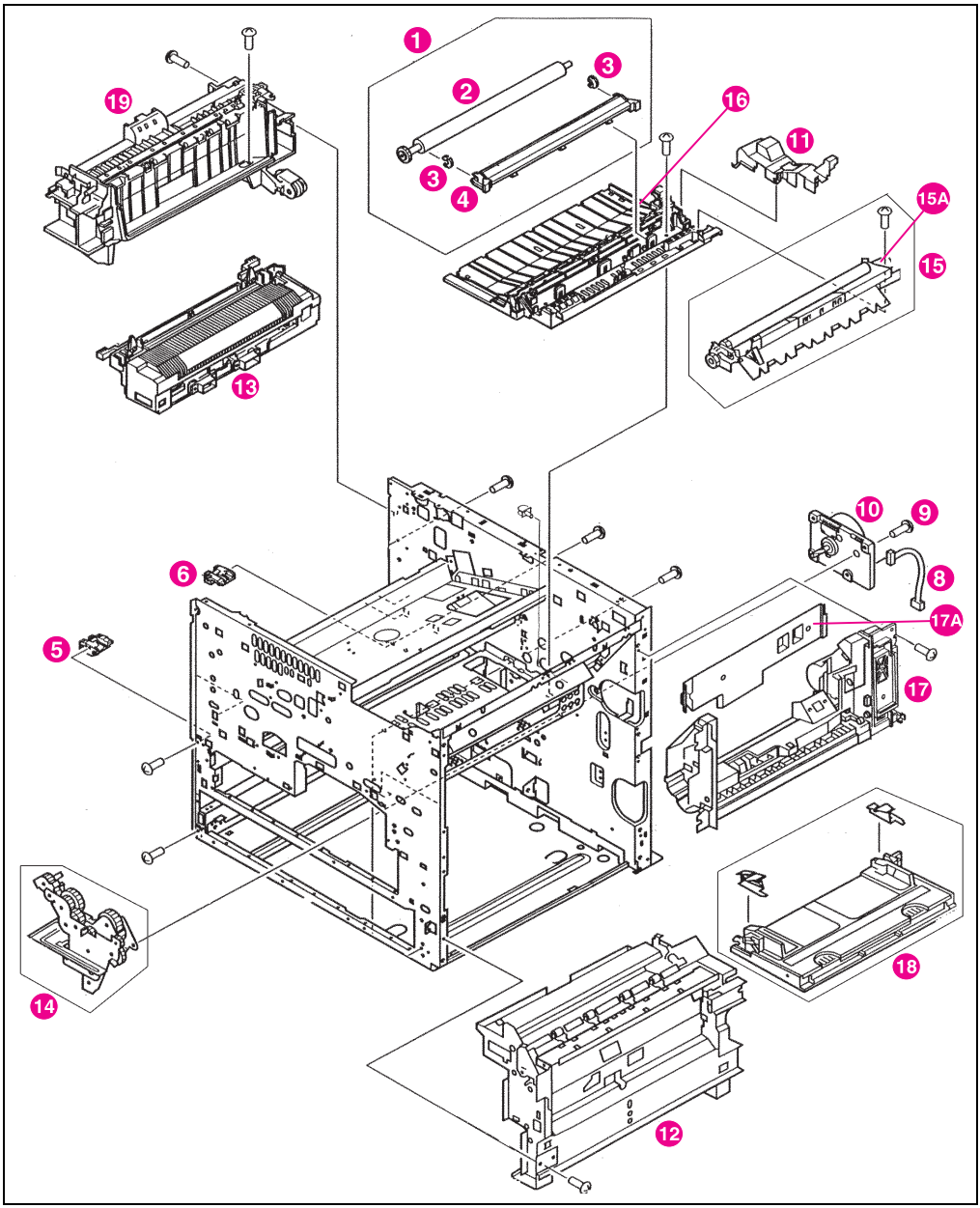

Figure 8-3 **Printer Internal Components (1 of 4)**

Download Service Manual And Resetter Printer at http://printer1.blogspot.com

Table 8-3. Printer Internal Components (1 of 4)

Ref	Description	Part Number	QTY
1	Assembly, Transfer Roller	RG5-4304-000CN	1
2	Roller, Transfer	RF5-2675-000CN	1
3	Transfer Guide Bushing	RB1-6441-000CN	2
4	Transfer Guide	RF5-2676-000CN	2
5	Holder, Damper-Front	RB1-6461-000CN	1
6	Holder, Damper-Rear	RB1-6462-000CN	1
8	Main Motor Cable	RG5-4386-000CN	1
9	Screw, M4 x 8 TP	XB6-7400-807CN	1
10	Main Motor	RH7-5219-000CN	1
11	Clutch Cover	RB2-3631-000CN	1
12	Paper Input Unit (PIU) (See Figure 8-7 on page 528 to order)	RG5-4434-000CN	1
12	Paper Input Unit (PIU) (ex.)	C4214-69004	1
13	Fusing Assembly, 110V	RG5-4315-000CN	1
x	Fuser Lock Lever-Right	RB1-6615-020CN	1
x	Fuser Lock Lever-Left	RB1-6616-020CN	1
13	Fusing Assembly, 110V (ex.)	C4214-69007	1
13	Fusing Assembly, 220V	RG5-4317-000CN	1
13	Fusing Assembly, 220V (ex.)	C4214-69008	1
14	Printer Drive Assembly	RG5-4365-000CN	1
15	Registration Assembly	RG5-4303-000CN	1
15A	Electromagnetic Clutch	RH7-5187-000CN	1
16	Feeder Assembly (see figure 8-7 on page 528 for detail)	RG5-4305-000CN	1
17	Tray 1 Assembly (see figure 8-7 on page 528 for detail)	RG5-4330-000CN	1
17A	Cover, Internal Tray	RB1-6749-000CN	1
18	Tray 1 Assembly Cover	RG5-4329-000CN	1
19	Face-down Delivery Assembly (see figure 8-7 on page 528 for detail)	RG5-1874-000CN	1

Download Service Manual And Resetter Printer at http://printer1.blogspot.com

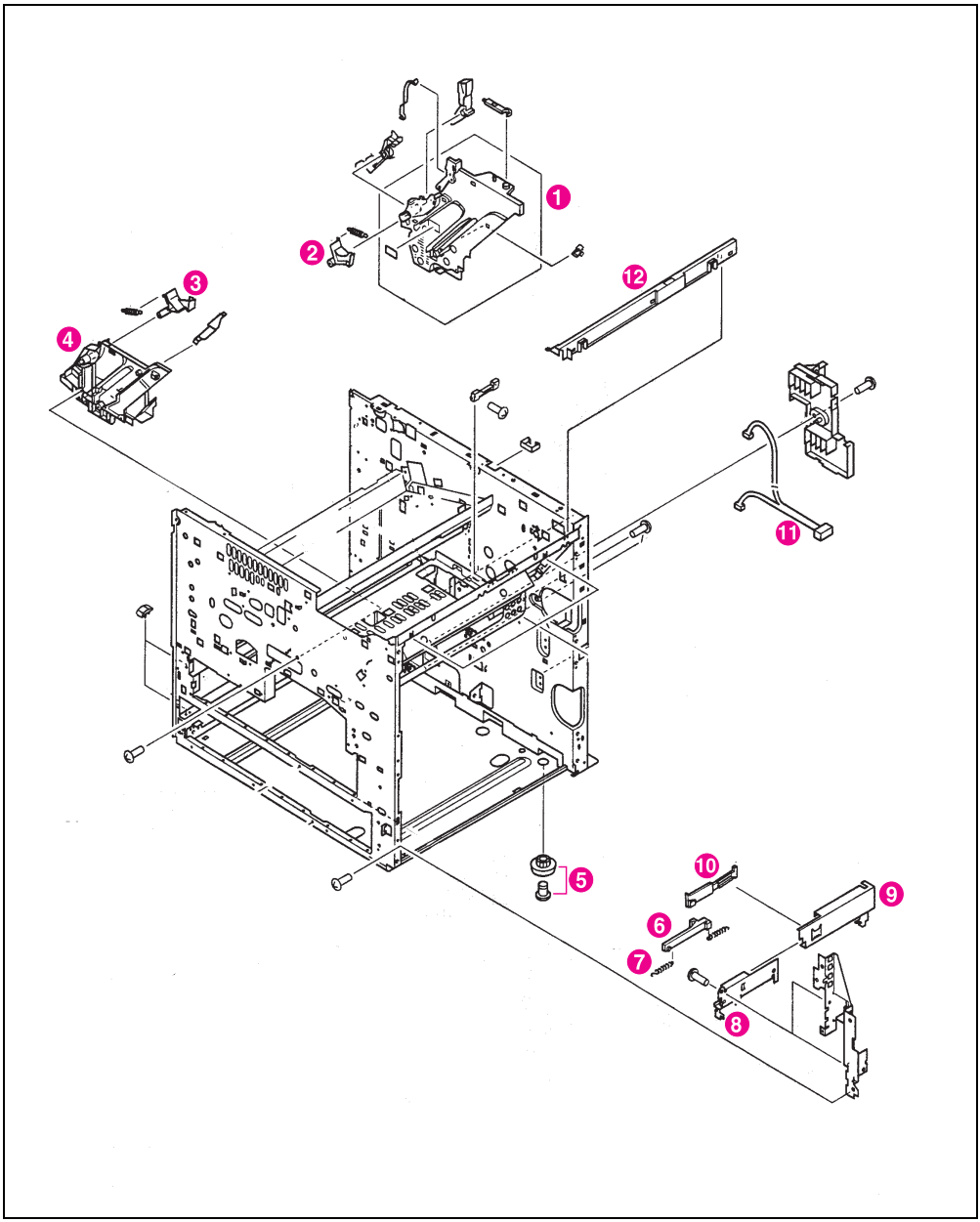

Figure 8-4 **Printer Internal Components (2 of 4)**

Download Service Manual And Resetter Printer at http://printer1.blogspot.com

Table 8-4. Printer Internal Components (2 of 4)

Ref	Description	Part Number	QTY
1	Guide, Rear	RF5-2726-000CN	1
2	Release, Arm	RB1-6446-000CN	
3	Arm-Pressure-front	RB1-6444-000CN	
4	Guide, Front	RB2-3622-000CN	
5	Foot	RB1-6421-000CN	
6	ROD	RB1-6778-000CN	
7	Spring, Tension	RS5-2499-000CN	
8	Guide, Rail	RB1-6776-000CN	
9	Stopper, Rail	RB1-6777-000CN	
10	Stopper, Rail	RB1-6783-000CN	
11	Cable, Tray Sensor	RG5-1920-000CN	1
12	Cover, Upper Right	RB1-6464-000CN	

Download Service Manual And Resetter Printer at http://printer1.blogspot.com

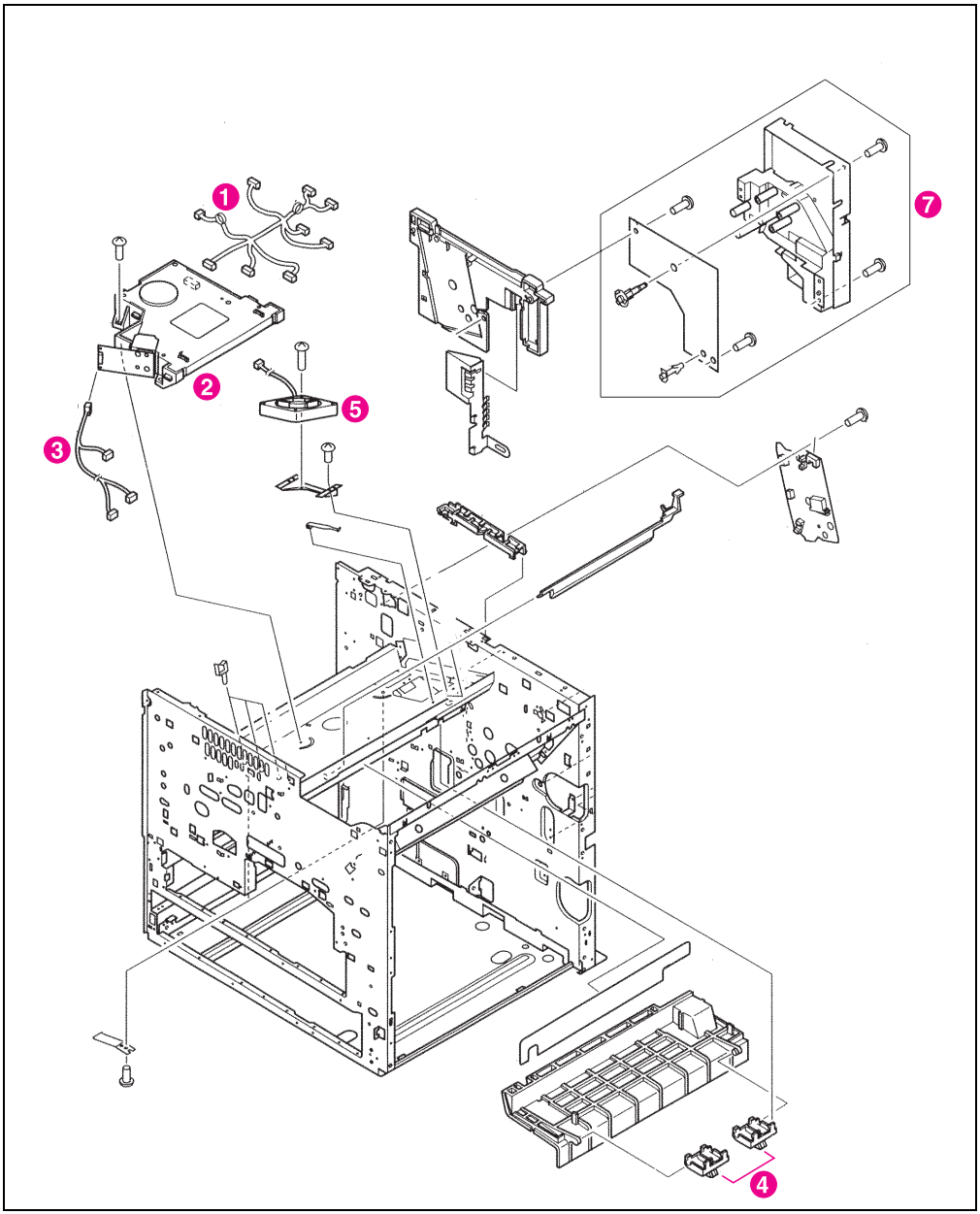

Figure 8-5 **Printer Internal Components (3 of 4)**

Download Service Manual And Resetter Printer at http://printer1.blogspot.com

Table 8-5. Printer internal Components (3 of 4)

Ref	Description	Part Number	QTY
1	Cable, Scanner Motor	RG5-4378-000CN	1
2	Assembly, Laser Scanner	RG5-4344-000CN	1
2	Assembly, Laser Scanner (exchange)	C4214-69003 (ex.)	1
3	Laser and Control Panel Cable	RG5-4377-000CN	1
4	Stopper, CG	RB1-6427-000CN	2
5	Fan, FM2/Laser Scanner	RH7-1266-000CN	1
6	Shutter, White	RB1-6473-000CN	1
7	High-Voltage Power Supply	RG5-4306-000CN	1

Download Service Manual And Resetter Printer at http://printer1.blogspot.com

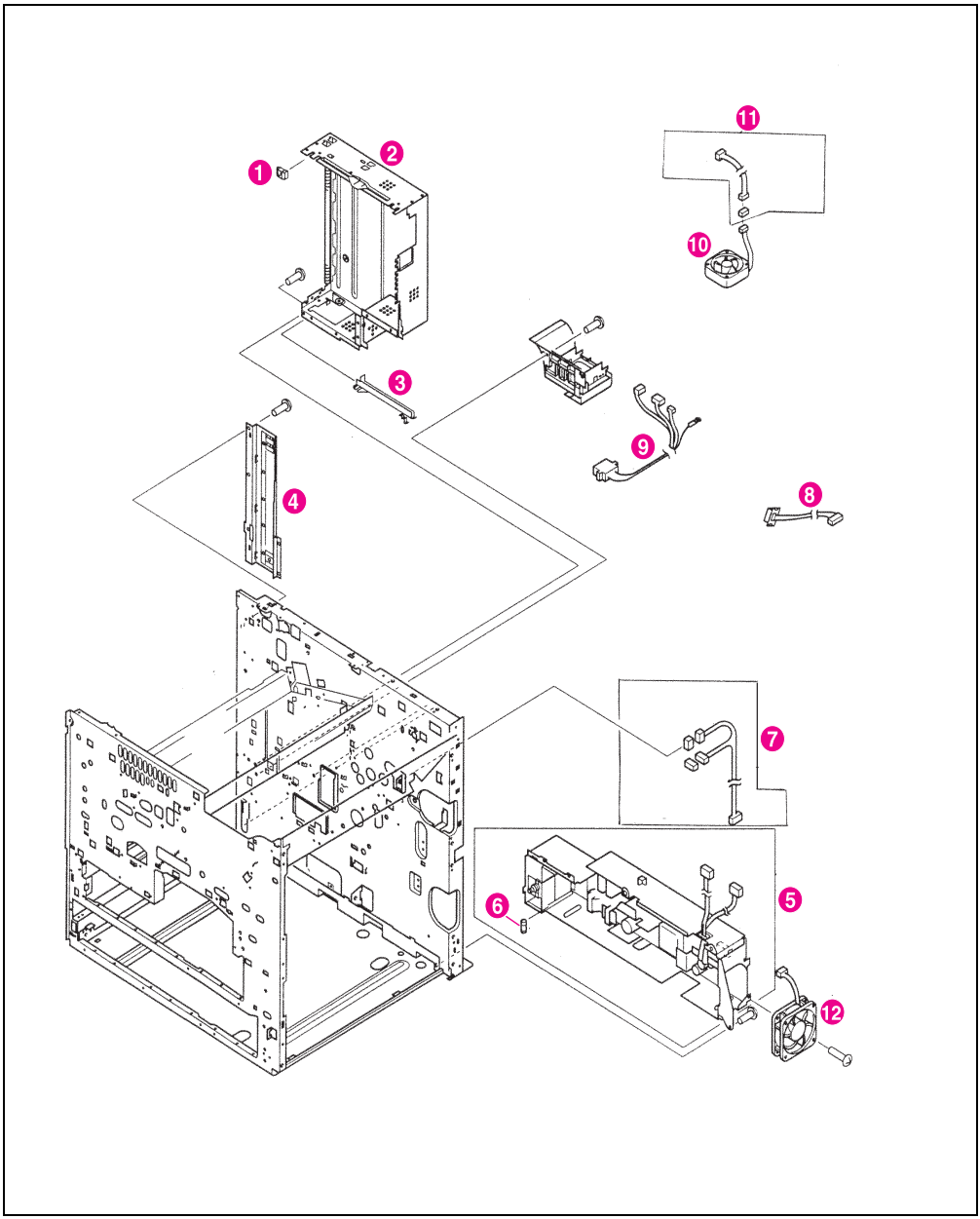

Figure 8-6 **Printer Internal Components (4 of 4)**

Download Service Manual And Resetter Printer at http://printer1.blogspot.com

Table 8-6. Printer Internal Components (4 of 4)

Ref	Description	Part Number	QTY
1	Guides, Interface	RB1-6771-000CN	2
2	Shield, Formatter	RF5-2678-000CN	1
3	Guide, Slide	RB1-6775-000CN	1
4	Shield, Plate	RF5-1464-000CN	1
5	Power Supply, Low-Voltage 110 V	RG5-4300-000CN	1
5	Power Supply, Low Voltage-220 V	RG5-4301-000CN	1
7	Cable, Registration	RG5-1928-000CN	1
8	Cable, Fuser 2	RG5-1850-000CN	1
9	Cable, Fuser 1	RG5-4381-000CN	1
10	Fan, FM3/Formatter	RH7-1271-000CN	1
11	Cable, Fan 1	RG5-1921-000CN	1
12	Fan, FM1/Low Voltage Power Supply	RH7-1396-000CN	1

Download Service Manual And Resetter Printer at http://printer1.blogspot.com

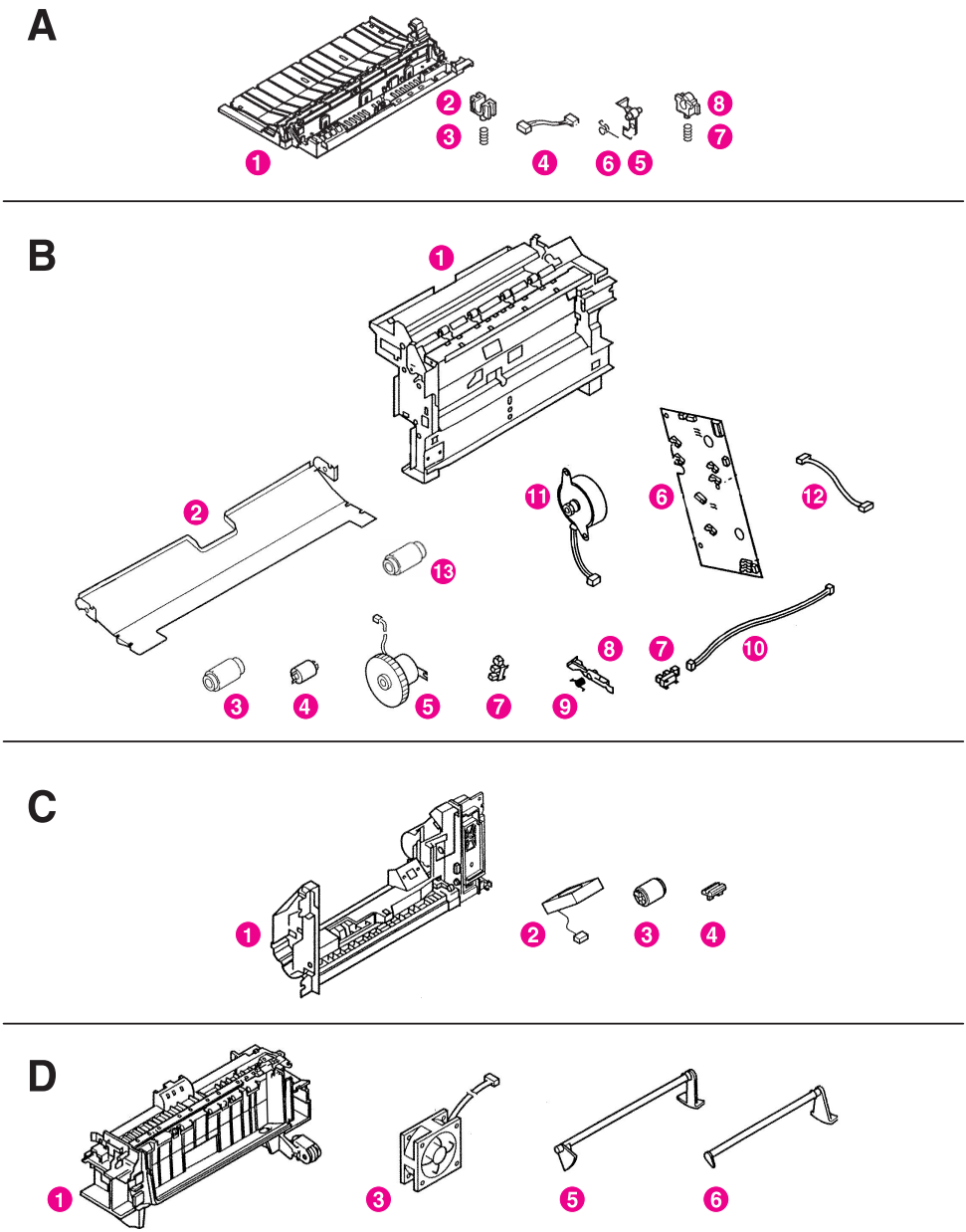

Figure 8-7 **Detail of Assemblies**

Download Service Manual And Resetter Printer at http://printer1.blogspot.com

Table 8-7. Detail of Assemblies

Ref	Description	Part Number	QTY
A1	**Feeder Assembly**	**RG5-4305-000CN**	
A2	Block, Shaft Holding, Front	RB2-3503-000CN	1
A3	Compression Spring, Front	RS6-2072-000CN	1
A4	Sensor Cable	RG5-1843-000CN	1
A5	Sensor Arm PS1	RB1-6417-000CN	1
A6	Sensor Arm Spring	RB1-6409-000CN	1
A7	Compression Spring, Rear	RS6-2073-000CN	1
A8	Block, Shaft Holding, Rear	RB2-3504-000CN	1
B1	**Assembly, Paper Pickup**	**RG5-4334-000CN**	**1**
B2	Plate, Guide-Upper	RB1-6582-000CN	
B3	Roller, Pickup	RF5-2708-000CN	
B4	Limiter, torque	RB2-3581-000CN	2
B5	Clutch, Paper Feed	RH7-5188-000CN	1
B6	PCA, PIU	RG5-1860-000CN	1
B7	Photo Interrupter	WG8-0291-000CN	1
B8	Arm, Sensor-PS2	RB1-6557-000CN	1
B9	Spring, Sensor Arm	RB1-6558-000CN	1
B10	Cable, Sensor	RG5-1859-000CN	1
B11	Motor, PIU	RH7-1350-000CN	1
B12	Cable, Paper Pickup	RG5-1861-000CN	1
B13	Feed and Separation Rollers	RF5-1834-000CN	4
C1	**Assembly, Tray 1**	**RG5-4330-000CN**	**1**
C2	Fan, FM5	RH7-1397-000CN	
C3	Tray1 Feed Roller	RB1-9526-000CN	1
C4	Tray 1 Separation Pad	RF5-2703-000CN	1
D1	**Delivery Assembly**	**RG5-1874-000CN**	**1**
D3	Fan, FM4/Delivery Assembly	RH7-1289-000CN	1
D5	Paper Height Lever	RB1-6693-000CN	1
D6	Paper Sensing Lever	RB1-6692-000CN	1

Download Service Manual And Resetter Printer at http://printer1.blogspot.com

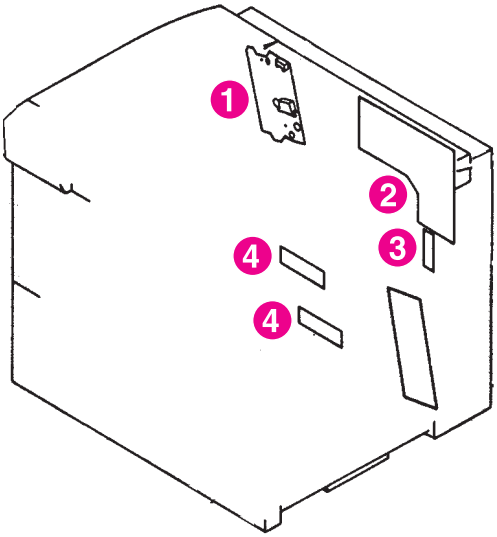

Figure 8-8 **PCB Assembly Location Diagram**

Table 8-8. PCB Assembly Locations

Ref	Description	Part Number	QTY
1	PCB, Switch/Sensor	RG5-1846-000CN	1
2	Assembly, DC Controller PCB	RG5-4375-000CN	1
2	Assembly, DC Controller PCB (exchange)	C4214-69001 (ex.)	1
3	PCB, Tray, Multi-purpose	RG5-1884-000CN	1
4	PCB, Tray Sensor	RB5-1845-000CN	2

Download Service Manual And Resetter Printer at http://printer1.blogspot.com

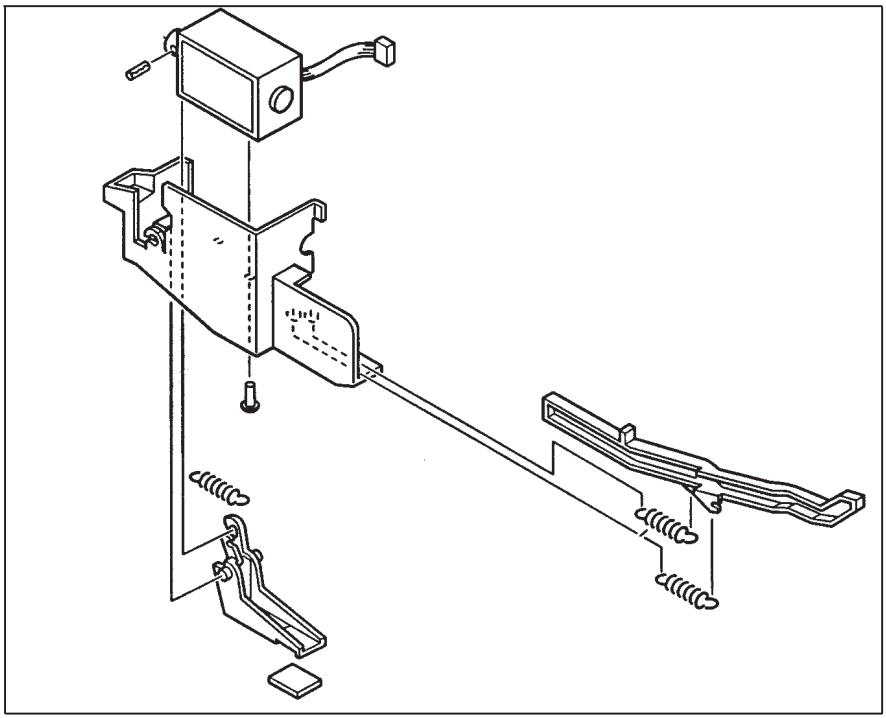

1

Figure 8-9 **Face-up Solenoid Assembly**

Table 8-9. Face-up Solenoid Assembly

Ref	Description	Part Number	QTY
1	Face-up Solenoid Assembly	RG5-1875-000CN	1

Download Service Manual And Resetter Printer at http://printer1.blogspot.com

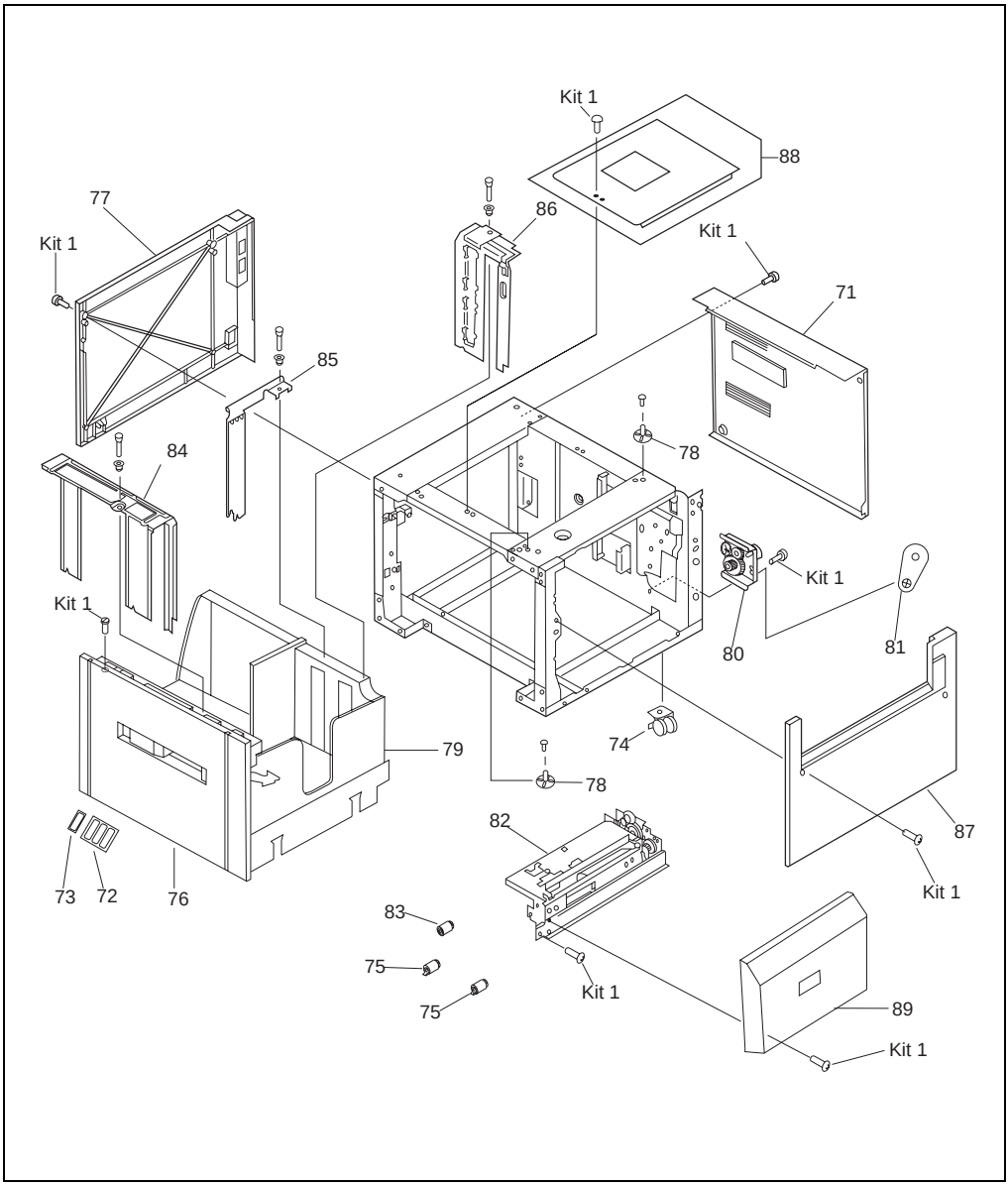

Figure 8-10 **2000-sheet Input Tray Components (1 of 2)**

Download Service Manual And Resetter Printer at http://printer1.blogspot.com

Table 8-10. 2000-sheet Input Tray Components (1 of 2)

Ref	Description	Part Number	QTY
71	Back Cover	RB2-2519-000CN	1
72	Tray Size Labels	RS5-8611-000CN	1
73	Tray Size Plate	RB1-6894-000CN	1
74	Caster	XZ9-0442-000CN	4
75	Feed and Separation Rollers	RF5-1834-000CN	2
76	Front Cover (with LED window)	RF5-2568-000CN	1
77	Left Cover	RF5-2646-000CN	1
78	Locating Pin, Metal (Positioning)	RF5-2556-000CN	3
79	2000-sheet Input Tray Paper Tray	RG5-3845-000CN	1
80	Paper Deck Drive Assembly	RG5-3851-000CN	1
81	Paper Deck Drive Bushing	RS5-1399-000CN	1
82	Paper Pickup Assembly	RG5-3843-000CN	1
83	Pickup Roller	RF5-1835-000CN	1
84	Plate Paper Limit Back	RG5-4201-000CN	1
85	Plate Paper Limit Middle	RG5-3849-000CN	1
86	Plate Paper Reference Front	RF5-3850-000CN	1
87	Right Cover	RB1-7832-020CN	1
88	Top Cover (Label Included)	RG5-2644-000CN	1
89	Vertical Transfer Unit (VTU)	RG5-3854-000CN	1
Kit 1	Hardware Kit	RY7-5044-000CN	1

Download Service Manual And Resetter Printer at http://printer1.blogspot.com

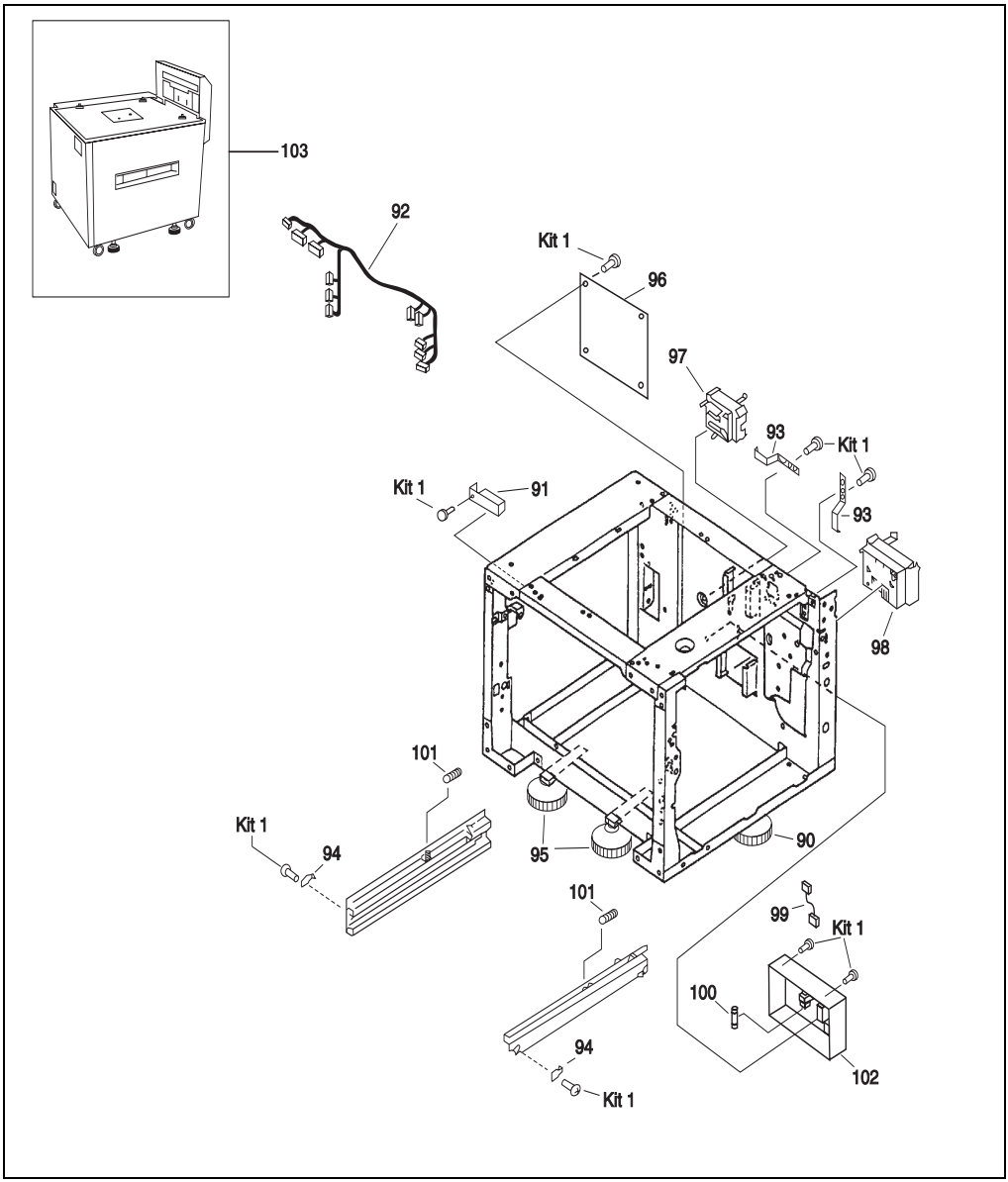

Figure 8-11 **2000-sheet Input Tray Components (2 of 2)**

Download Service Manual And Resetter Printer at http://printer1.blogspot.com

Table 8-11. 2000-sheet Input Tray Components (2 of 2)

Ref	Description	Part Number	QTY
90	Feet Adjustable Tip	RG5-3853-000CN	1
91	Front LED PCA with holder and cable	RG5-4204-000CN	1
92	Main Cable	RG5-3919-000CN	1
93	Metal retaining spring (Spring Leaf)	RB1-7835-000CN	1
94	Metallic Retaining Tab (Plate Stop)	RB1-7677-000CN	1
95	Outrigger	RG5-4205-000CN	1
96	Paper Deck PCA (2000-sheet Input Tray Controller)	RG5-3908-000CN	1
97	Paper Quantity Sensor PCA Assembly	RG5-2166-000CN	1
98	Paper Size Sensor PCA Assembly	RG5-2168-000CN	1
99	Power Supply Cable (PSU)	RG5-3909-000CN	1
100	Power Supply Fuse 250V/3.15A	VD7-1893-151CN	1
101	Tension Spring	RS5-2561-000CN	1
102	Universal Power Supply Assembly	RG5-4021-000CN	1
103	2000-sheet Input Tray (whole unit)	R95-3002-000CN	
Kit 1	2K (2000-sheet Input Tray) Deck Hardware Kit	RY7-5044-000CN	1
Not Shown	Jumper Cable, Long	C4781-60502	1
Not Shown	Jumper Cable, Short	C4781-60501	1
Not Shown	Power Box (includes bracket clip)	C4781-60500	1
Not Shown	Tray Shipping Lock	RB1-7746-000CN	1
Not Shown	C-link Cable (engine to input device)	C3763-60502	1
Not Shown	Clutch cover for 2000-sheet input tray	RB2-2509-000CN	1

Download Service Manual And Resetter Printer at http://printer1.blogspot.com

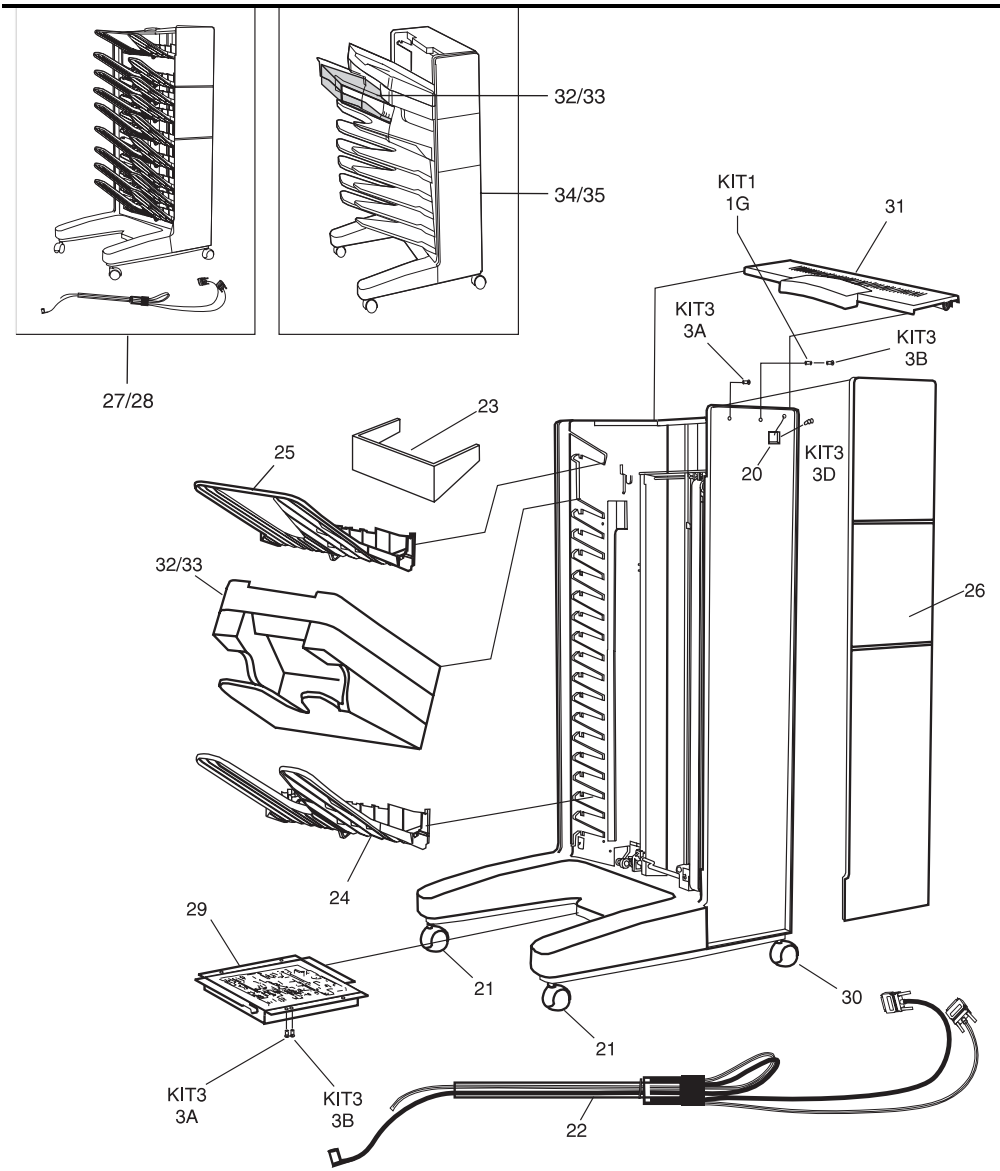

Figure 8-12 **8-bin Mailbox Components (1 of 3)**

Download Service Manual And Resetter Printer at http://printer1.blogspot.com

Table 8-12. 8-bin Mailbox Components (1 of 3)

Ref	Description	Part Number	QTY
20	User LED PCA (with Cable)	C4785-60515	1
21	Adjustable Fixed Caster	C4785-60511	1
22	Attachment Assembly (Rod, Bracket, Cables)	C4785-60516	1
23	Blind Cover	C4785-60503	1
24	Standard Output Bin	C4785-60502	1
25	Face-up Bin	C3764-60505	1
26	Front Cover	C4785-60504	1
27	8-bin Mailbox Assembly without attachment rod (Exchange Unit)	C4785-69500 (ex.)	1
28	8-bin Mailbox Assembly with attachment rod (Whole Unit)	C4785-60500	1
29	8-bin Mailbox Controller (with metal box)	C4785-60508	1
30	Nonadjustable Fixed Caster	C4785-60510	1
31	Top Cover	C3764-60555	1
32	Stapler Assembly (Exchange Unit)	C4787-69500 (ex.)	1
33	Stapler Assembly	C4787-60500	1
34	5-bin Mailbox - for Stapler	C4787-60502	1
35	5-bin Mailbox - for Stapler Assembly (Exchange Unit)	C4787-69502 (ex.)	1
Kit 1	**Plastic Parts**	C4785-60519	1
Kit 1/1G	Spacer, Plastic	(included in Kit 1)	
Kit 3	**Hardware**	C4785-60521	1
Kit 3/3B	Screws Torx, T20, M4X10	(included in Kit 3)	
Kit 3/3C	Screws Torx, Tapping T20, M4X10	(included in Kit 3)	
Kit 3/3E	Screw Torx, Tapping T10	(included in Kit 3)	

Download Service Manual And Resetter Printer at http://printer1.blogspot.com

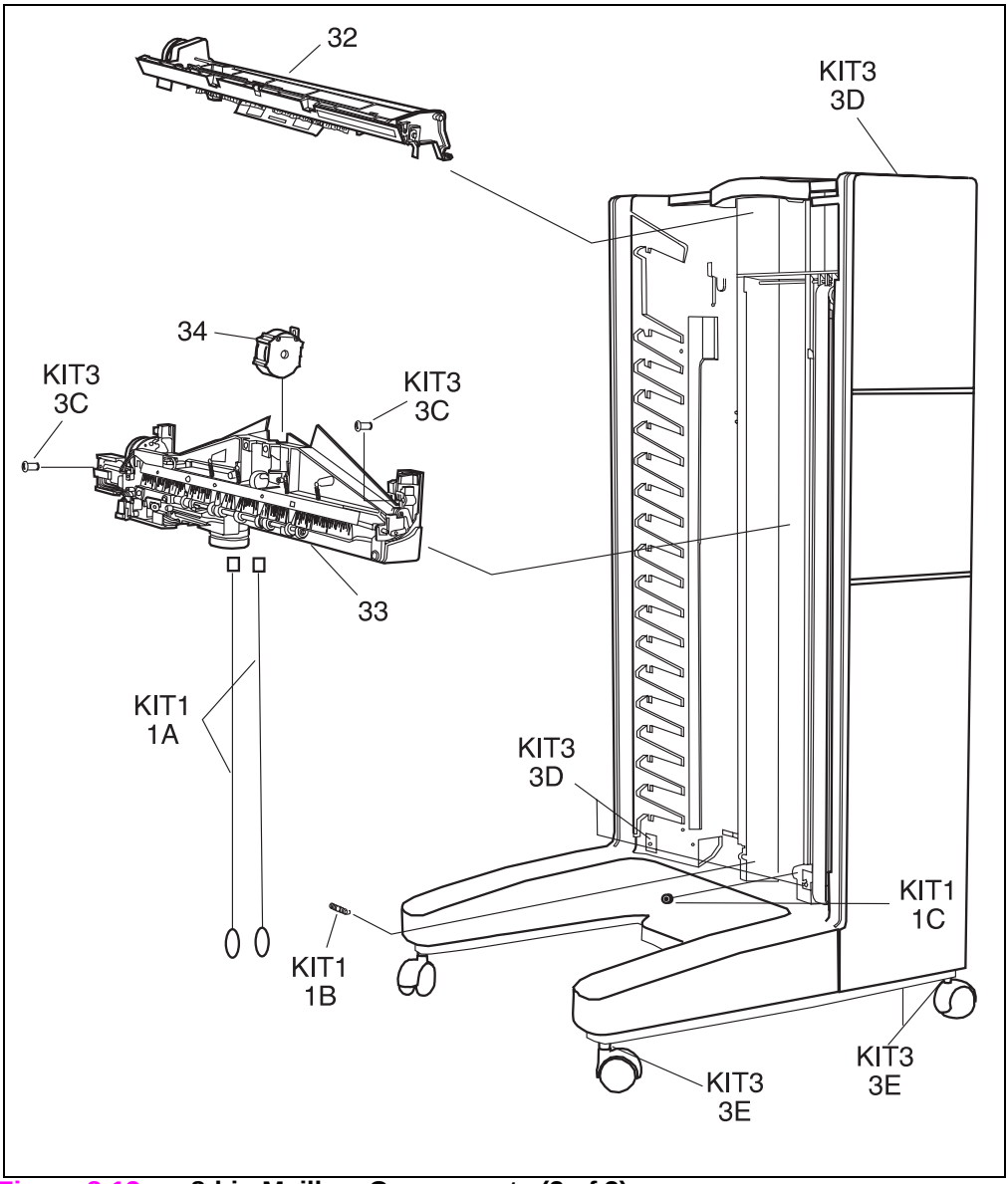

Figure 8-13 **8-bin Mailbox Components (2 of 3)**

Download Service Manual And Resetter Printer at http://printer1.blogspot.com

Table 8-13. 8-bin Mailbox Components (2 of 3)

Ref	Description	Part Number	QTY
32	Flipper Assembly	C4785-60509	1
33	Head Assembly (with Metal Tape)	C4785-60506	1
34	Metal Tape and Housing Assembly	C4785-60507	1
Kit 1	**Plastic Parts**	C4785-60519	1
Kit 1/1A	Anticurl String		
Kit 1/1B	Anticurl Spring		
Kit 1/1C	Pulley, Small Bottom		
Kit 3	**Hardware**	C4785-60521	1
Kit 3/3D	Screws Torx, T20, M4x12		
Kit 3/3E	Screw Torx, Tapping T10		
Kit 3/3F	Caster Screws		
Not Shown	Repackaging Kit	C4785-60513	1
Not Shown	Short C-link Cable adapter (extension)*	C4785-70001	1
Not Shown	C-link Cable 5-bin 8-bin Mailbox to Stapler Unit	C3766-60539	1

*. The extension is necessary when no input device is used in combination with an 8-bin mailbox or a 5-bin mailbox with stapler.

Download Service Manual And Resetter Printer at http://printer1.blogspot.com

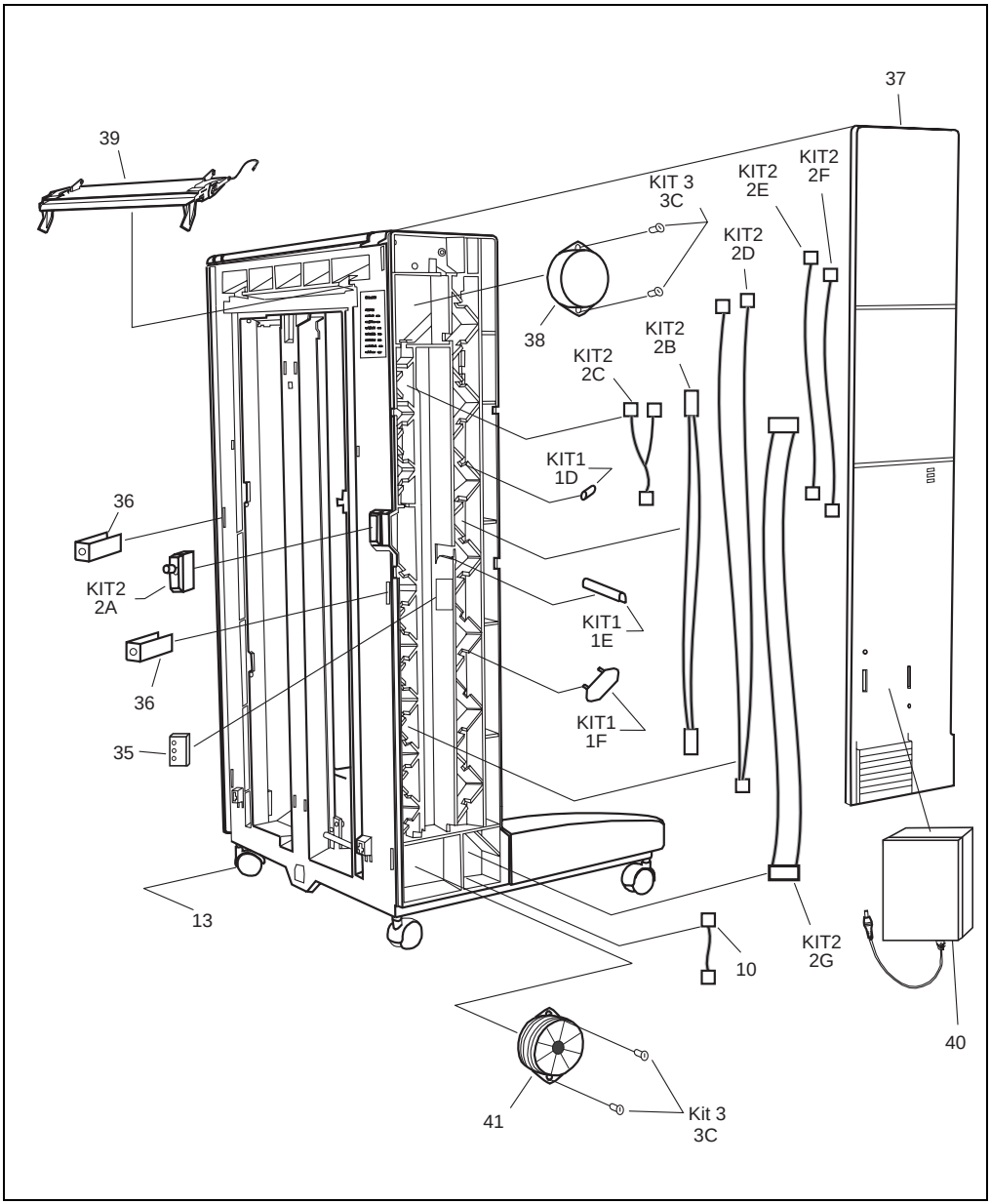

Figure 8-14 **8-bin Mailbox Components (3 of 3)**

Download Service Manual And Resetter Printer at http://printer1.blogspot.com

Table 8-14. 8-bin Mailbox Components (3 of 3)

Ref	Description	Part Number	QTY
35	3 Diagnostic LED PCA (with Cable)	C4785-60514	1
36	Attachment Clip	C4785-60512	1
37	Back Cover	C4785-60505	1
38	Delivery Head Position Motor	C3764-60507	1
39	Input Paper Guide (Nose Piece)	C4785-60561	1
40	Power Supply	C3764-60501	1
41	Transport Belt Motor (with Fan)	C4785-60518	1
Kit 1	**Plastic Parts**	C4785-60519	1
Kit 1/1D	Cable Holder Round Gasket		
Kit 1/1E	Flat Cable holder Edge		
Kit 1/1F	Flat Cable Holder		
Kit 2	**Cables**	C4785-60520	1
Kit 2/2A	Interlock Switch		
Kit 2/2B	Delivery Head Motor Cable		
Kit 2/2C	Flipper Sensors - Controller Cable		
Kit 2/2D	Flipper Encoder - Controller		
Kit 2/2E	Flipper Motor - Controller		
Kit 2/2AF	ESD Cable		
Kit 2/2G	Delivery Head Assembly Flat Cable		
Kit 3	**Hardware**	C4785-60521	1
Kit 3/3A	Screws Torx		
Not Shown	Shipping Lock Kit for 8-bin Mailbox/5-bin Mailbox with Stapler	C4787-60503	1

Download Service Manual And Resetter Printer at http://printer1.blogspot.com

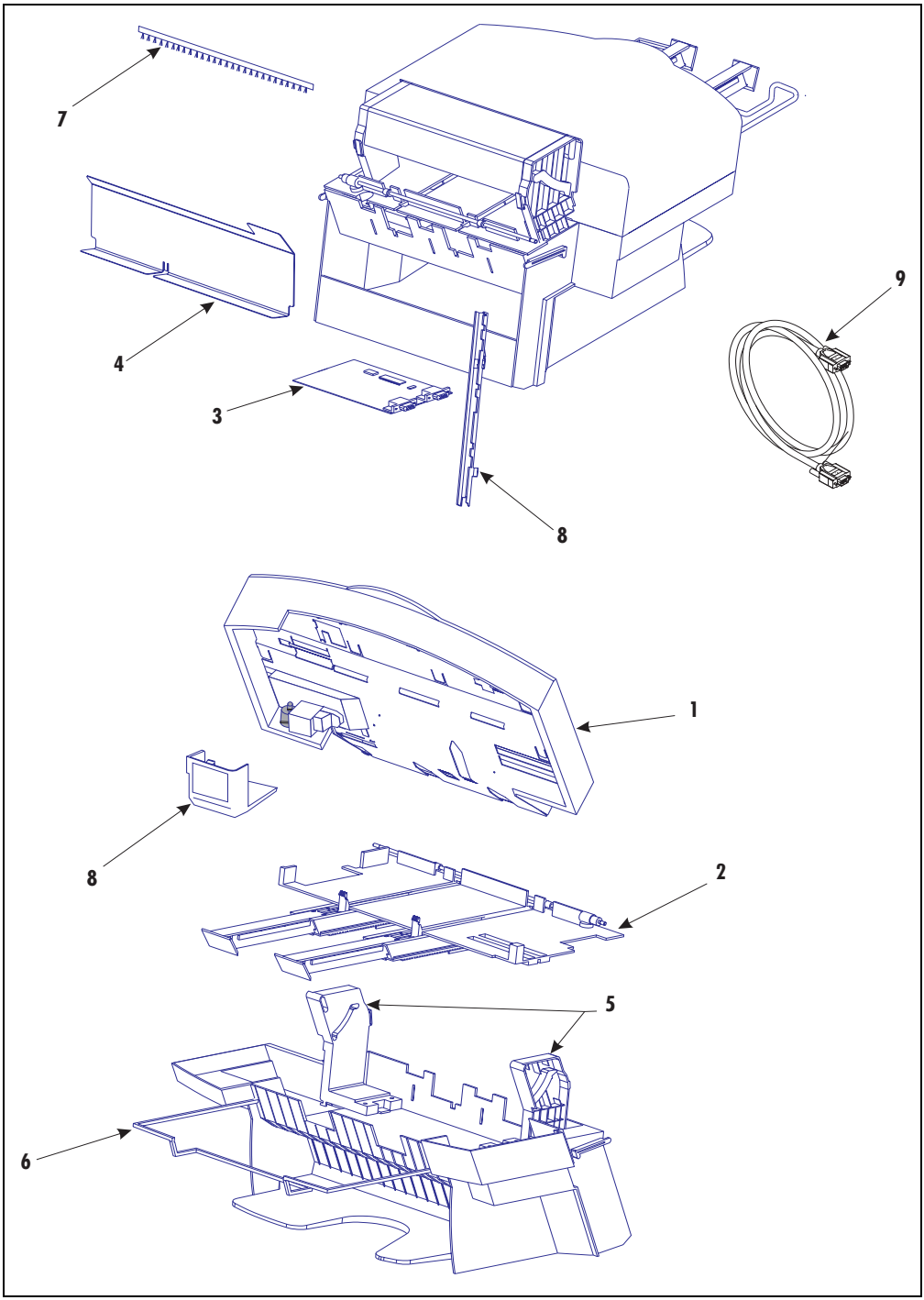

Figure 8-15 **Stapler Internal Components**

Download Service Manual And Resetter Printer at http://printer1.blogspot.com

Table 8-15. Stapler Internal Components

Ref	Description	Part Number	QTY
	Stapler Assembly	C4787-60500	1
	Stapler Assembly (Exchange Unit)	C4787-69500 (ex.)	1
1	Top Cover Assembly	C3766-60501	1
2	Stapling Bed Assembly	C3766-60503	1
3	Stapler Control PCA	C4787-60501	1
4	Back Plate	C3766-60505	1
5	Hinges, Set of	C3766-60506	1
6	Wire Frame	C3766-60507	1
7	Brushes	C3766-60508	1
not shown	Stapler Packaging	C3766-60509	1
8	Kit: Plastic staple cover; scan bar (shown) bin full sensor, actuator, and flag (not shown)	C3766-60510	1
not shown	Kit: T10 Torx screws (10)	C3766-60511	1
9	C-link Cable (97 cm)	C3766-60512	1
not shown	Mailbox with Stapler Packaging	C3766-60516	1

Download Service Manual And Resetter Printer at http://printer1.blogspot.com

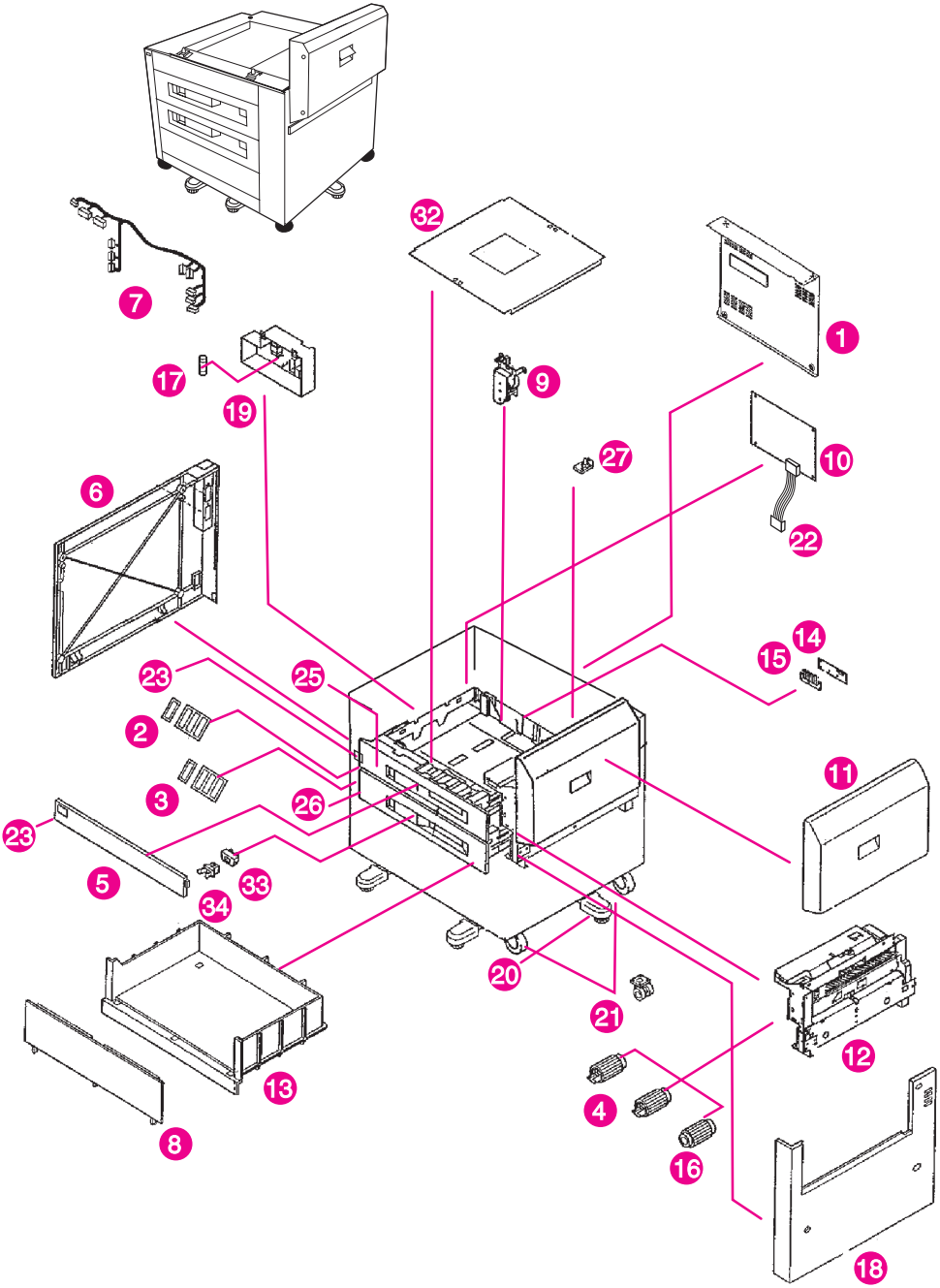

Download Service Manual And Resetter Printer at http://printer1.blogspot.com

Figure 8-16 **2 x 500-sheet Input Tray Internal Components**

Table 8-16. 2 x 500-sheet Input Tray Internal Components

Ref	Description	Part Number	QTY
1	Back Cover	RB2-3675-000CN	1
2	Tray Size Labels	RS5-8611-000CN	1
3	Tray Size Plate	RB1-6894-000CN	1
4	Feed and Separation Rollers	RF5-1834-000CN	4
5	Front Top Cover	RF5-2762-000CN	1
6	Left Cover	RF5-2764-000CN	1
7	Main Cable	RG5-4440-000CN	1
8	Front Door (Cover Storage Tray)	RB2-3668-000CN	1
9	Paper Deck Drive Assembly	RG5-4416-000CN	1
10	2 x 500-sheet Input Tray Controller PCA	RG5-4442-000CN	1
11	Paper Feed Assembly (Vertical Transfer Unit)	RG5-4403-000CN	1
12	Paper Pickup Assembly	RG5-4410-000CN	1
13	Storage Paper Tray	RB2-3669-000CN	1
14	Tray-Size Sensing PCA	RG5-1845-000CN	1
15	Holder Size PCA	RB2-3667-000CN	1
16	Pickup Roller	RF5-2708-000CN	1
17	Power Supply Fuse 250V/3.15A	VD7-1893-151CN	1
18	Right Cover	RB2-3666-000CN	1
19	Universal Power Supply Assembly	RG5-4021-000CN	1
20	Outrigger	RG5-4205-000CN	1
21	Caster	XZ9-0442-000CN	1
22	Power Supply Cable (PSU)	RG5-3909-000CN	1
23	Front LED PCA	RG5-4441-000CN	1
25	Tray 4 Assembly	R98-1007-000CN	1
26	Tray 5 Assembly	R98-1006-000CN	1
27	Locating Pin, Metal (Positioning)	RF5-2556-000CN	1
not shown	Power Box (Includes bracket clip)	C4781-60500	1
not shown	Jumper Cable, Short	C4781-60501	1
not shown	Jumper Cable, Long	C4781-60502	1
not shown	Feet Adjustable Tip	RG5-3853-000CN	1
not shown	Clutch cover for 2 x 500-sheet input tray	RB2-3690-000CN	1

Download Service Manual And Resetter Printer at http://printer1.blogspot.com

Table 8-16. 2 x 500-sheet Input Tray Internal Components (continued)

Ref	Description	Part Number	QTY
32	Top Cover (Includes label)	RF5-2766-000CN	1
33	Spacer, latch	RB2-3705-000CN	1
34	Latch	XZ9-0379-000CN	1
35	2 x 500-sheet Input Tray (whole unit)	R95-3003-000CN	

Note All screws are included in the Screws Kit, and all shipping locks are included in the Shipping Locks Kit.

Download Service Manual And Resetter Printer at http://printer1.blogspot.com

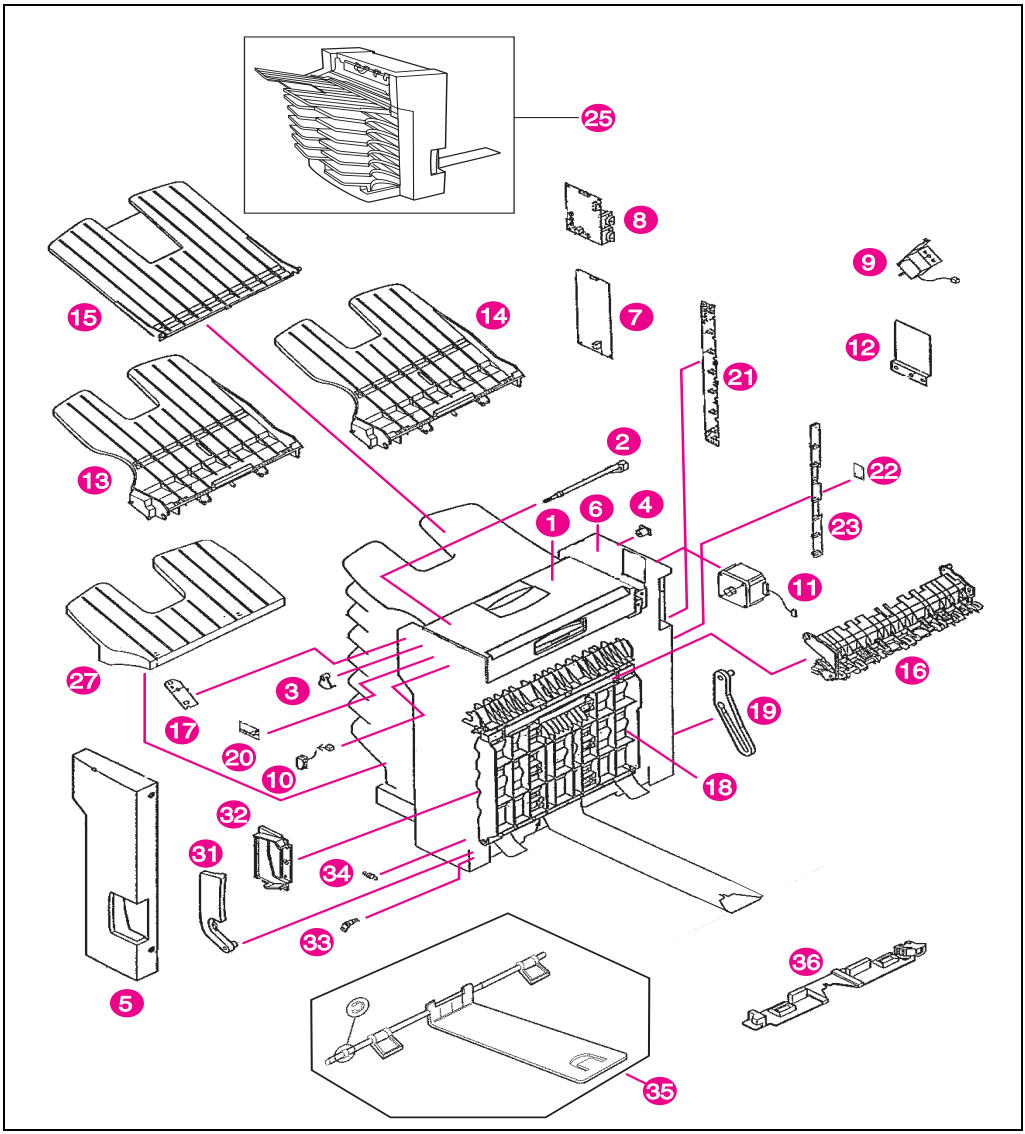

Figure 8-17 **7-bin Tabletop Mailbox Internal Components**

Table 8-17. 7-bin Tabletop Mailbox Internal Components

Reference	Description	Part Number	QTY
1	Top Cover Assembly (Upper Guide)	RG1-3838-000CN	1
2	Bin Full Sensor	RA2-2484-000CN	1
3	Flag, Sensor	RA2-2485-000CN	1

Download Service Manual And Resetter Printer at http://printer1.blogspot.com

Table 8-17. 7-bin Tabletop Mailbox Internal Components (continued)

Reference	Description	Part Number	QTY
4	Bushing	RA2-2505-000CN	1
5	Front Cover	RF1-4004-000CN	1
6	Back Cover	RA2-2455-000CN	1
7	Power Supply	RH3-2205-000CN	1
8	7-bin Tabletop Mailbox Controller PCA Assembly	RG1-3853-000CN	1
9	Solenoid Reversing Mechanism	RH7-5223-000CN	1
10	Solenoid Flipper	RH7-5225-000CN	1
11	Reversing Mechanism Motor	RF7-1395-000CN	1
12	Plate (Motor Cover)	RA2-2541-000CN	1
13	Face-down Bin Assembly, Odd (with 1 roller)	RG1-3836-000CN	1
14	Face-down Bin Assembly, Even (with 2 rollers)	RG1-3837-000CN	1
15	Reversing Tray (Face-up)	RA2-2487-000CN	1
16	Diverter Assembly (Flipper)	RG1-3844-000CN	1
17	Face-up Bin Full and Sensor PCA	RG1-3816-000CN	1
18	Right Cover Assembly	RG1-3840-000CN	1
19	Plate, Stopper	RA2-2527-000CN	1
20	LED PCA	RG1-3817-000CN	1
21	Empty Bin Sensor PCA	RG1-3815-000CN	1
22	Support Plate	RA2-2500-000CN	1
23	Full Bin and Interlock sensor PCA	RG1-3814-000CN	1
not shown	C-link Cable (80 cm)	C4783-70000	1
25	7-bin Tabletop Mailbox, whole unit	R95-3007-000CN	1
not shown	7-bin Tabletop Mailbox, Stand Assembly	C4784-60500	1
27	Bottom Bin (Tray)	RA2-2408-000CN	1
31	Handle Latch	RA2-2512-000CN	1
32	Cover Latch	RA2-2531-000CN	1
33	Pin Positioning Bushing	RA2-2439-000CN	1
34	Spring Tension	RA2-2513-000CN	1
35	Rail Assembly	RG1-3842-000CN	1
36	Latching Mechanism	RF1-4005-000CN	1
not shown	Hardware Screws Kit for 7-bin Tabletop Mailbox	RY7-5048-000CN	1

Note All screws are included in the Screws Kit.

Download Service Manual And Resetter Printer at http://printer1.blogspot.com

Alphabetical Parts List

Table 8-18. Alphabetical Parts List

Description	Part Number	Table No. and Page
2 x 500-sheet Input Tray (Tray 4 and 5)/C4780A	R95-3003-000CN	Table 8-1 (page 515) Table 8-16 (page 545)
2 x 500-sheet Input Tray Controller PCA	RG5-4442-000CN	Table 8-16 (page 545)
2000-sheet Input Tray (Tray 4)/C4781A	R95-3002-000CN	Table 8-1 (page 515) Table 8-11 (page 535)
2000-sheet Input Tray Paper Tray	RG5-3845-000CN	Table 8-10 (page 533)
2K (2000-sheet Input Tray) Deck Hardware Kit	RY7-5044-000CN	Table 8-11 (page 535)
3 Diagnostic LED PCA (with Cable)	C4785-60514	Table 8-14 (page 541)
5-bin Mailbox - for Stapler	C4787-60502	Table 8-12 (page 537)
5-bin Mailbox - for Stapler Assembly (Exchange Unit)	C4787-69502 (ex.)	Table 8-12 (page 537)
5-bin Mailbox with Stapler/C4787A	C4787-69502 (ex.)	Table 8-1 (page 515)
5-bin Mailbox with Stapler/C4787A (8-bin Mailbox only, without the Stapler Unit.)	C4787-60502	Table 8-1 (page 515)
7-bin Tabletop Mailbox Controller PCA Assembly	RG1-3853-000CN	Table 8-17 (page 547)
7-bin Tabletop Mailbox, Stand Assembly	C4784-60500	Table 8-17 (page 547)
7-bin Tabletop Mailbox/C4783A	R95-3007-000CN	Table 8-1 (page 515) Table 8-17 (page 547)
8-bin Mailbox/C4785A		Table 8-1 (page 515)
Adjustable Fixed Caster	C4785-60511	Table 8-12 (page 537)
Arm, Sensor-PS2	RB1-6557-000CN	Table 8-7 (page 529)
Arm-Pressure-front	RB1-6444-000CN	Table 8-4 (page 523)
Assembly, DC Controller PCB	RG5-4375-000CN	Table 8-8 (page 530)
Assembly, DC Controller PCB (exchange)	C4214-69001 (ex.)	Table 8-8 (page 530)
Assembly, Laser Scanner	RG5-4344-000CN	Table 8-5 (page 525)
Assembly, Laser Scanner (exchange)	C4214-69003 (ex.)	Table 8-5 (page 525)
Assembly, MP Tray (Tray 1)	RG5-4330-000CN	Table 8-7 (page 529)
Assembly, Paper Pickup	RG5-4334-000CN	Table 8-7 (page 529)
Assembly, Transfer Roller	RG5-4304-000CN	Table 8-3 (page 521)
Attachment Assembly (Rod, Bracket, Cables)	C4785-60516	Table 8-12 (page 537)
Attachment Clip	C4785-60512	Table 8-14 (page 541)

Download Service Manual And Resetter Printer at http://printer1.blogspot.com

Table 8-18. Alphabetical Parts List (continued)

Description	Part Number	Table No. and Page
Back Cover, 8-bin Mailbox	C4785-60505	Table 8-14 (page 541)
Back Cover, 7-bin Tabletop Mailbox	RA2-2455-000CN	Table 8-17 (page 547)
Back Cover, 2000-sheet Input Tray	RB2-2519-000CN	Table 8-10 (page 533)
Back Cover, 2 x 500-sheet Input Tray	RB2-3675-000CN	Table 8-16 (page 545)
Back Plate	C3766-60505	Table 8-15 (page 543)
Bin Full Sensor	RA2-2484-000CN	Table 8-17 (page 547)
Blind Cover	C4785-60503	Table 8-12 (page 537)
Block, Shaft Holding, Front	RB2-3503-000CN	Table 8-7 (page 529)
Block, Shaft Holding, Rear	RB2-3504-000CN	Table 8-7 (page 529)
Bottom Bin (Tray)	RA2-2408-000CN	Table 8-17 (page 547)
Brushes	C3766-60508	Table 8-15 (page 543)
Bushing	RA2-2505-000CN	Table 8-17 (page 547)
C-link Cable (61 cm) (engine to input device)	C3763-60502	Table 8-1 (page 515) Table 8-11 (page 535)
C-link Cable (80 cm)	C4783-70000	Table 8-17 (page 547)
C-link Cable (97 cm)	C3766-60512	Table 8-15 (page 543)
C-link Cable Assembly 97 cm (8-bin Mailbox to Stapler)	C3766-60539	Table 8-1 (page 515) Table 8-13 (page 539)
Cable, Fan 1	RG5-1921-000CN	Table 8-6 (page 527)
Cable, Fuser 1	RG5-4381-000CN	Table 8-6 (page 527)
Cable, Fuser 2	RG5-1850-000CN	Table 8-6 (page 527)
Cable, Paper Pickup	RG5-1861-000CN	Table 8-7 (page 529)
Cable, Registration	RG5-1928-000CN	Table 8-6 (page 527)
Cable, Scanner Motor	RG5-4378-000CN	Table 8-5 (page 525)
Cable, Sensor	RG5-1859-000CN	Table 8-7 (page 529)
Cable, Tray Sensor	RG5-1920-000CN	Table 8-4 (page 523)
Cables	C4785-60520	Table 8-14 (page 541)
Caster	XZ9-0442-000CN	Table 8-10 (page 533) Table 8-16 (page 545)
Clutch Cover	RB2-3631-000CN	Table 8-3 (page 521)
Clutch cover for 2 x 500-sheet input tray	RB2-3690-000CN	Table 8-16 (page 545)
Clutch cover for 2000-sheet input tray	RB2-2509-000CN	Table 8-11 (page 535)
Clutch, Paper Feed	RH7-5188-000CN	Table 8-7 (page 529)
Compression Spring, Front	RS6-2072-000CN	Table 8-7 (page 529)

Download Service Manual And Resetter Printer at http://printer1.blogspot.com

Table 8-18. Alphabetical Parts List (continued)

Description	Part Number	Table No. and Page
Compression Spring, Rear	RS6-2073-000CN	Table 8-7 (page 529)
Cover Latch	RA2-2531-000CN	Table 8-17 (page 547)
Cover, Internal Tray	RB1-6749-000CN	Table 8-3 (page 521)
Cover, Left-Lower	RB1-6480-000CN	Table 8-2 (page 519)
Cover, Rear	RF5-1402-000CN	Table 8-2 (page 519)
Cover, Switch	RB1-6492-000CN	Table 8-2 (page 519)
Cover, Upper Right	RB1-6464-000CN	Table 8-4 (page 523)
Delivery Assembly	RG5-1874-000CN	Table 8-7 (page 529)
Delivery Cover (Left Side F/U)	RB2-3558-000CN	Table 8-2 (page 519)
Delivery Head Position Motor	C3764-60507	Table 8-14 (page 541)
Display, Control Panel	RG5-4384-000CN	Table 8-2 (page 519)
Diverter Assembly	RG5-4325-000CN	Table 8-2 (page 519)
Diverter Assembly (Flipper)	RG1-3844-000CN	Table 8-17 (page 547)
Diverter Drive Assembly	RF9-1249-000CN	Table 8-2 (page 519)
Duplexer/C4782A	C4782-60501 C4782-69501 (ex.)	Table 8-1 (page 515)
EIO Coverplate	5182-5899	Table 8-1 (page 515)
Electrical Cover (Rear by Formatter)	RB1-6489-000CN	Table 8-2 (page 519)
Electromagnetic Clutch	RH7-5187-000CN	Table 8-3 (page 521)
Empty Bin Sensor PCA	RG1-3815-000CN	Table 8-17 (page 547)
Envelope Feeder/C3765B	C3765-60501	Table 8-1 (page 515)
Face-down Bin Assembly, Even (with 2 rollers)	RG1-3837-000CN	Table 8-17 (page 547)
Face-down Bin Assembly, Odd (with 1 roller)	RG1-3836-000CN	Table 8-17 (page 547)
Face-down Delivery Assembly	RG5-1874-000CN	Table 8-3 (page 521)
Face-up Bin (8-bin Mailbox)	C3764-60505	Table 8-12 (page 537)
Face-up Bin (engine)	RB1-6491-000CN	Table 8-1 (page 515)
Face-up Bin Full and Sensor PCA	RG1-3816-000CN	Table 8-17 (page 547)
Face-up Solenoid Assembly	RG5-1875-000CN	Table 8-9 (page 531)
Fan, FM1/Low Voltage Power Supply	RH7-1396-000CN	Table 8-6 (page 527)
Fan, FM2/Laser Scanner	RH7-1266-000CN	Table 8-5 (page 525)
Fan, FM3/ Formatter	RH7-1271-000CN	Table 8-6 (page 527)
Fan, FM4/Delivery Assembly	RH7-1289-000CN	Table 8-7 (page 529)
Fan, FM5	RH7-1397-000CN	Table 8-7 (page 529)

Download Service Manual And Resetter Printer at http://printer1.blogspot.com

Table 8-18. Alphabetical Parts List (continued)

Description	Part Number	Table No. and Page
Feed and Separation Rollers	RF5-1834-000CN	Table 8-10 (page 533) Table 8-16 (page 545)
Feeder Assembly	RG5-4305-000CN	Table 8-3 (page 521) Table 8-7 (page 529)
Feet Adjustable Tip	RG5-3853-000CN	Table 8-11 (page 535) Table 8-16 (page 545)
Flag, Sensor	RA2-2485-000CN	Table 8-17 (page 547)
Flipper Assembly	C4785-60509	Table 8-13 (page 539)
Foot	RB1-6421-000CN	Table 8-4 (page 523)
Formatter Assembly	C4107-67901	Table 8-1 (page 515)
Formatter Assembly, Exchange	C4107-69001 (ex.)	Table 8-1 (page 515)
Front Cover, 8-bin Mailbox	C4785-60504	Table 8-12 (page 537)
Front Cover, 7-bin Tabletop Mailbox	RF1-4004-000CN	Table 8-17 (page 547)
Front Cover, engine	RG5-4362-000CN	Table 8-2 (page 519)
Front Cover (Duplex Jam Removal)	RB2-3626-000CN	Table 8-2 (page 519)
Front Cover (with LED window)	RF5-2568-000CN	Table 8-10 (page 533)
Front Door (Cover Storage Tray)	RB2-3668-000CN	Table 8-16 (page 545)
Front LED PCA	RG5-4441-000CN	Table 8-16 (page 545)
Front LED PCA with holder and cable	RG5-4204-000CN	Table 8-11 (page 535)
Front Top Cover	RF5-2762-000CN	Table 8-16 (page 545)
Full Bin and Interlock sensor PCA	RG1-3814-000CN	Table 8-17 (page 547)
Fuser Lock Lever-Left	RB1-6616-020CN	Table 8-3 (page 521)
Fuser Lock Lever-Right	RB1-6615-020CN	Table 8-3 (page 521)
Fusing Assembly, 110V	RG5-4315-000CN	Table 8-3 (page 521)
Fusing Assembly, 220V	RG5-4317-000CN	Table 8-3 (page 521)
Fusing Assembly, 110V (ex.)	C4214-69007	Table 8-3 (page 521)
Fusing Assembly, 220V (ex.)	C4214-69008	Table 8-3 (page 521)
Gear, 20T	RS5-1127-000CN	Table 8-2 (page 519)
Guide, Front	RB2-3622-000CN	Table 8-4 (page 523)
Guide, Rail	RB1-6776-000CN	Table 8-4 (page 523)
Guide, Rear	RF5-2726-000CN	Table 8-4 (page 523)
Guide, Slide	RB1-6775-000CN	Table 8-6 (page 527)
Guides, Interface	RB1-6771-000CN	Table 8-6 (page 527)
Handle Latch	RA2-2512-000CN	Table 8-17 (page 547)

Download Service Manual And Resetter Printer at http://printer1.blogspot.com

Table 8-18. Alphabetical Parts List (continued)

Description	Part Number	Table No. and Page
Hardware	C4785-60521	Table 8-12 (page 537) Table 8-13 (page 539) Table 8-14 (page 541)
Hardware Kit	RY7-5044-000CN	Table 8-10 (page 533)
Hardware Screws Kit for 7-bin Tabletop Mailbox	RY7-5048-000CN	Table 8-17 (page 547)
Head Assembly (with Metal Tape)	C4785-60506	Table 8-13 (page 539)
High-Voltage Power Supply	RG5-4306-000CN	Table 8-5 (page 525)
Hinge Plate	RB2-3641-000CN	Table 8-2 (page 519)
Hinge, Stopper	RF5-2701-000CN	Table 8-2 (page 519)
Hinges, Set of	C3766-60506	Table 8-15 (page 543)
Holder Size PCA	RB2-3667-000CN	Table 8-16 (page 545)
Holder, Damper-Front	RB1-6461-000CN	Table 8-3 (page 521)
Holder, Damper-Rear	RB1-6462-000CN	Table 8-3 (page 521)
Input Paper Guide (Nose Piece)	C4785-60561	Table 8-14 (page 541)
Jumper Cable, Long	C4781-60502	Table 8-1 (page 515) Table 8-11 (page 535) Table 8-16 (page 545)
Jumper Cable, Short	C4781-60501	Table 8-1 (page 515) Table 8-11 (page 535) Table 8-16 (page 545)
Kit: Plastic staple cover; scan bar bin full sensor, actuator, and flag	C3766-60510	Table 8-15 (page 543)
Kit: T10 Torx screws (10)	C3766-60511	Table 8-15 (page 543)
Label, Operation	RS5-8676-000CN	Table 8-2 (page 519)
Laser and Control Panel Cable	RG5-4377-000CN	Table 8-5 (page 525)
Latch	XZ9-0379-000CN	Table 8-16 (page 545)
Latching Mechanism	RF1-4005-000CN	Table 8-17 (page 547)
LED PCA	RG1-3817-000CN	Table 8-17 (page 547)
Left Cover, 2000-sheet Input Tray	RF5-2646-000CN	Table 8-10 (page 533)
Left Cover, 2 x 500-sheet Input Tray	RF5-2764-000CN	Table 8-16 (page 545)
Limiter, torque	RB2-3581-000CN	Table 8-7 (page 529)
Locating Pin, Metal (Positioning)	RF5-2556-000CN	Table 8-10 (page 533) Table 8-16 (page 545)
Mailbox with Stapler Packaging	C3766-60516	Table 8-15 (page 543)
Main Cable, 2000-sheet Input Tray	RG5-3919-000CN	Table 8-11 (page 535)
Main Cable, 2 x 500-sheet Input Tray	RG5-4440-000CN	Table 8-16 (page 545)

Download Service Manual And Resetter Printer at http://printer1.blogspot.com

Table 8-18. Alphabetical Parts List (continued)

Description	Part Number	Table No. and Page
Main Motor	RH7-5219-000CN	Table 8-3 (page 521)
Main Motor Cable	RG5-4386-000CN	Table 8-3 (page 521)
Maintenance Kit, 100-120V/C3914A	C3914-69001 (ex.)	Table 8-1 (page 515)
Maintenance Kit, 220-240V/C3915A	C3915-69001 (ex.)	Table 8-1 (page 515)
Metal retaining spring (Spring Leaf)	RB1-7835-000CN	Table 8-11 (page 535)
Metal Tape and Housing Assembly	C4785-60507	Table 8-13 (page 539)
Metallic Retaining Tab (Plate Stop)	RB1-7677-000CN	Table 8-11 (page 535)
Motor, PIU	RH7-1350-000CN	Table 8-7 (page 529)
MP Separation Pad	RF5-2703-000CN	Table 8-7 (page 529)
MP Tray Assembly Cover (Tray 1)	RG5-4329-000CN	Table 8-3 (page 521)
Multi-purpose Tray Assembly (Tray 1)	RG5-4330-000CN	Table 8-3 (page 521)
Multi-Purpose Tray Feed Roller (Tray 1)	RB1-9526-000CN	Table 8-7 (page 529)
8-bin Mailbox Assembly with attachment rod (Whole Unit)	C4785-60500	Table 8-12 (page 537)
8-bin Mailbox Assembly without attachment rod (Exchange Unit)	C4785-69500 (ex.)	Table 8-12 (page 537)
8-bin Mailbox Controller (with metal box)	C4785-60508	Table 8-12 (page 537)
Nonadjustable Fixed Caster	C4785-60510	Table 8-12 (page 537)
Open/Close Stopper	RB1-6484-000CN	Table 8-2 (page 519)
Outrigger, 2 x 500-sheet Input Tray	RG5-3852-000CN	Table 8-16 (page 545)
Outrigger, 2000-sheet Input Tray	RG5-4205-000CN	Table 8-11 (page 535)
Packaging Kit, 2000-sheet Input Tray	C3763-60500	Table 8-1 (page 515)
Overlay, Control Panel (English)	C4214-40029	Table 8-2 (page 519)
Overlay, Control Panel (French)	C4214-40030	Table 8-2 (page 519)
Overlay, Control Panel (German)	C4214-40041	Table 8-2 (page 519)
Overlay, Control Panel (Italian)	C4214-40031	Table 8-2 (page 519)
Overlay, Control Panel (Portuguese)	C4214-40032	Table 8-2 (page 519)
Overlay, Control Panel (Spanish)	C4214-40042	Table 8-2 (page 519)
Packaging Kit, duplexer	C3762-60500	Table 8-1 (page 515)
Packaging Kit, Envelope Feeder	C3765-60500	Table 8-1 (page 515)
Packaging Kit, 8-bin Mailbox	C3764-60500	Table 8-1 (page 515)
Packaging Kit, Printer	5041-9238	Table 8-1 (page 515)
Paper Deck Drive Assembly, 2000-sheet Input Tray	RG5-3851-000CN	Table 8-10 (page 533)

Download Service Manual And Resetter Printer at http://printer1.blogspot.com

Table 8-18. Alphabetical Parts List (continued)

Description	Part Number	Table No. and Page
Paper Deck Drive Assembly, 2 x 500-sheet Input Tray	RG5-4416-000CN	Table 8-16 (page 545)
Paper Deck Drive Bushing	RS5-1399-000CN	Table 8-10 (page 533)
Paper Deck PCA (2000-sheet Input Tray Controller)	RG5-3908-000CN	Table 8-11 (page 535)
Paper Feed Assembly (Vertical Transfer Unit)	RG5-4403-000CN	Table 8-16 (page 545)
Paper Height Lever	RB1-6693-000CN	Table 8-7 (page 529)
Paper Input Unit (PIU)	RG5-4434-000CN	Table 8-3 (page 521)
Paper Input Unit (PIU) (ex.)	C4214-69004	Table 8-3 (page 521)
Paper Pickup Assembly, 2000-sheet Input Tray	RG5-3843-000CN	Table 8-10 (page 533)
Paper Pickup Assembly, 2 x 500-sheet Input Tray	RG5-4410-000CN	Table 8-16 (page 545)
Paper Quantity Sensor PCA Assembly	RG5-2166-000CN	Table 8-11 (page 535)
Paper Sensing Lever	RB1-6692-000CN	Table 8-7 (page 529)
Paper Size Guide (Trays 2 and 3)	RF5-1484-000CN	Table 8-1 (page 515)
Paper Size Guide Label (Trays 2 and 3)	RS5-8605-000CN	Table 8-1 (page 515)
Paper Size Sensor PCA Assembly	RG5-2168-000CN	Table 8-11 (page 535)
PCA, PIU	RG5-1860-000CN	Table 8-7 (page 529)
PCB, Switch/Sensor	RG5-1846-000CN	Table 8-8 (page 530)
PCB, Tray Sensor	RB5-1845-000CN	Table 8-8 (page 530)
PCB, Tray, Multi-purpose	RG5-1884-000CN	Table 8-8 (page 530)
Photo Interrupter	WG8-0291-000CN	Table 8-7 (page 529)
Pickup Roller, 2000-sheet Input Tray	RF5-1835-000CN	Table 8-10 (page 533)
Pickup Roller, 2 x 500-sheet Input Tray	RF5-2708-000CN	Table 8-16 (page 545)
Pin Positioning Bushing	RA2-2439-000CN	Table 8-17 (page 547)
Plastic Parts	C4785-60519	Table 8-12 (page 537) Table 8-13 (page 539) Table 8-14 (page 541)
Plate (Motor Cover)	RA2-2541-000CN	Table 8-17 (page 547)
Plate Paper Limit Back	RG5-4201-000CN	Table 8-10 (page 533)
Plate Paper Limit Middle	RG5-3849-000CN	Table 8-10 (page 533)
Plate Paper Reference Front	RF5-3850-000CN	Table 8-10 (page 533)
Plate, Guide-Upper	RB1-6582-000CN	Table 8-7 (page 529)
Plate, Stopper	RA2-2527-000CN	Table 8-17 (page 547)

Download Service Manual And Resetter Printer at http://printer1.blogspot.com

Table 8-18. Alphabetical Parts List (continued)

Description	Part Number	Table No. and Page
Power Box (Includes bracket clip)	C4781-60500	Table 8-1 (page 515) Table 8-11 (page 535) Table 8-16 (page 545)
Power Supply (8-bin Mailbox)	C3764-60501	Table 8-14 (page 541)
Power Supply (7-bin Tabletop Mailbox)	RH3-2205-000CN	Table 8-17 (page 547)
Power Supply Cable (PSU)	RG5-3909-000CN	Table 8-11 (page 535) Table 8-16 (page 545)
Power Supply Fuse 250V/3.15A	VD7-1893-151CN	Table 8-11 (page 535) Table 8-16 (page 545)
Power Supply, Low Voltage-220 V	RG5-4301-000CN	Table 8-6 (page 527)
Power Supply, Low-Voltage 110 V	RG5-4300-000CN	Table 8-6 (page 527)
Printer Drive Assembly	RG5-4365-000CN	Table 8-3 (page 521)
Rail Assembly	RA2-3842-000CN	Table 8-17 (page 547)
Registration Assembly	RG5-4303-000CN	Table 8-3 (page 521)
Release, Arm	RB1-6446-000CN	Table 8-4 (page 523)
Repackaging Kit	C4785-60513	Table 8-13 (page 539)
Reversing Mechanism Motor	RF7-1395-000CN	Table 8-17 (page 547)
Reversing Tray (Face-up)	RA2-2487-000CN	Table 8-17 (page 547)
Right Cover, 2000-sheet Input Tray	RB1-7832-020CN	Table 8-10 (page 533)
Right Cover, 2 x 500-sheet Input Tray	RB2-3666-000CN	Table 8-16 (page 545)
Right Cover Assembly, 7-bin Tabletop Mailbox	RG1-3840-000CN	Table 8-17 (page 547)
Right Cover Assembly, engine	RG5-1915-000CN	Table 8-2 (page 519)
Right, Lower Cover (Rear Plastic on Sheet Metal)	RB2-3642-000CN	Table 8-2 (page 519)
ROD	RB1-6778-000CN	Table 8-4 (page 523)
Rollers, Feed and Separation	RF5-1834-000CN	Table 8-7 (page 529)
Roller, Pickup	RF5-2708-000CN	Table 8-7 (page 529)
Roller, Transfer	RF5-2675-000CN	Table 8-3 (page 521)
Screw, M3 x 8	XA9-0872-000CN	Table 8-2 (page 519)
Screw, M4 x 10	XA9-0870-000CN	Table 8-2 (page 519)
Screw, M4 x 8	XA9-0605-000CN	Table 8-2 (page 519)
Screw, M4 x 8 TP	XB6-7400-807CN	Table 8-3 (page 521)
Sensor Arm PS1	RB1-6417-000CN	Table 8-7 (page 529)
Sensor Arm Spring	RB1-6409-000CN	Table 8-7 (page 529)
Sensor Cable	RG5-1843-000CN	Table 8-7 (page 529)

Download Service Manual And Resetter Printer at http://printer1.blogspot.com

Table 8-18. Alphabetical Parts List (continued)

Description	Part Number	Table No. and Page
Shield, Formatter	RF5-2678-000CN	Table 8-6 (page 527)
Shield, Plate	RF5-1464-000CN	Table 8-6 (page 527)
Shipping Lock Kit for 8-bin Mailbox/5-bin Mailbox with Stapler	C4787-60503	Table 8-14 (page 541)
Short C-link Cable adapter	C4785-70001	Table 8-13 (page 539)
Shutter, White	RB1-6473-000CN	Table 8-5 (page 525)
Solenoid Flipper	RH7-5225-000CN	Table 8-17 (page 547)
Solenoid Reversing Mechanism	RH7-5223-000CN	Table 8-17 (page 547)
Spacer, latch	RB2-3705-000CN	Table 8-16 (page 545)
Spring, Compression	RB1-6493-000CN	Table 8-2 (page 519)
Spring, Torsion	RB1-6509-000CN	Table 8-2 (page 519)
Spring Tension	RA2-2513-000CN	Table 8-17 (page 547)
Spring, Sensor Arm	RB1-6558-000CN	Table 8-7 (page 529)
Spring, Tension	RS5-2499-000CN	Table 8-4 (page 523)
Stand for 7-bin Tabletop Mailbox/C4784A	C4784-60500	Table 8-1 (page 515)
Standard Output Bin	C4785-60502	Table 8-12 (page 537)
Stapler Assembly	C4787-60500	Table 8-1 (page 515) Table 8-12 (page 537) Table 8-15 (page 543)
Stapler Assembly (Exchange Unit)	C4787-69500 (ex.)	Table 8-12 (page 537) Table 8-15 (page 543)
Stapler Cartridges (3-pack)/C3772A		Table 8-1 (page 515)
Stapler Control PCA	C4787-60501	Table 8-15 (page 543)
Stapler Packaging	C3766-60509	Table 8-15 (page 543)
Stapling Bed Assembly	C3766-60503	Table 8-15 (page 543)
Stopper, CG	RB1-6427-000CN	Table 8-5 (page 525)
Stopper, Rail	RB1-6777-000CN	Table 8-4 (page 523)
Stopper, Rail	RB1-6783-000CN	Table 8-4 (page 523)
Storage Paper Tray	RB2-3669-000CN	Table 8-16 (page 545)
Support Plate	RA2-2500-000CN	Table 8-17 (page 547)
Tension Spring	RS5-2561-000CN	Table 8-11 (page 535)
Toner Cartridge/C4182X		Table 8-1 (page 515)
Top Cover, 8-bin Mailbox	C3764-60555	Table 8-12 (page 537)
Top Cover (Includes label), 2 x 500-sheet Input Tray	RF5-2766-000CN	Table 8-16 (page 545)

Download Service Manual And Resetter Printer at http://printer1.blogspot.com

Table 8-18. Alphabetical Parts List (continued)

Description	Part Number	Table No. and Page
Top Cover (Label Included), 2000-sheet Input Tray	RG5-2644-000CN	Table 8-10 (page 533)
Top Cover Assembly (Engine)	RG5-4360-000CN	Table 8-2 (page 519)
Top Cover Assembly, stapler	C3766-60501	Table 8-15 (page 543)
Top Cover Assembly (Upper Guide), 7-bin Tabletop Mailbox	RG1-3838-000CN	Table 8-17 (page 547)
Transfer Guide	RF5-2676-000CN	Table 8-3 (page 521)
Transfer Guide Bushing	RB1-6441-000CN	Table 8-3 (page 521)
Transport Belt Motor (with Fan)	C4785-60518	Table 8-14 (page 541)
Tray 2	RG5-3951-000CN	Table 8-1 (page 515)
Tray 3	RG5-3952-000CN	Table 8-1 (page 515)
Tray 4 Assembly	R98-1007-000CN	Table 8-16 (page 545)
Tray 5 Assembly	R98-1006-000CN	Table 8-16 (page 545)
Tray Shipping Lock	RB1-7746-000CN	Table 8-11 (page 535)
Tray Size Labels	RS5-8611-000CN	Table 8-10 (page 533) Table 8-16 (page 545)
Tray Size Plate	RB1-6894-000CN	Table 8-10 (page 533) Table 8-16 (page 545)
Tray, Face-up	RB1-6491-000CN	Table 8-2 (page 519)
Tray, Output-Face-down	RB1-6490-000CN	Table 8-2 (page 519)
Tray-Size Sensing PCA	RG5-1845-000CN	Table 8-16 (page 545)
Universal Power Supply Assembly	RG5-4021-000CN	Table 8-11 (page 535) Table 8-16 (page 545)
User LED PCA (with Cable)	C4785-60515	Table 8-12 (page 537)
Vertical Transfer Unit (VTU)	RG5-3854-000CN	Table 8-10 (page 533)
Wire Frame	C3766-60507	Table 8-15 (page 543)

Download Service Manual And Resetter Printer at http://printer1.blogspot.com

Numerical Parts List

Table 8-19. Numerical Parts List

Part Number	Description	Table No. and Page
	Stapler Cartridges (3-pack)/C3772A	Table 8-1 (page 515)
	Toner Cartridge/C4182X	Table 8-1 (page 515)
5041-9238	Packaging Kit, Printer	Table 8-1 (page 515)
5182-5899	EIO Coverplate	Table 8-1 (page 515)
C3762-60500	Packaging Kit, duplexer	Table 8-1 (page 515)
C3763-60500	Packaging Kit, 2000-sheet Input Tray	Table 8-1 (page 515)
C3763-60502	C-link Cable (61 cm) (engine to input device)	Table 8-1 (page 515) Table 8-11 (page 535)
C3764-60500	Packaging Kit, 8-bin Mailbox	Table 8-1 (page 515)
C3764-60501	Power Supply (8-bin Mailbox)	Table 8-14 (page 541)
C3764-60505	Face-up Bin (8-bin Mailbox)	Table 8-12 (page 537)
C3764-60507	Delivery Head Position Motor	Table 8-14 (page 541)
C3764-60555	Top Cover, 8-bin Mailbox	Table 8-12 (page 537)
C3765-60500	Packaging Kit, Envelope Feeder	Table 8-1 (page 515)
C3765-60501	Envelope Feeder/C3765B	Table 8-1 (page 515)
C3766-60501	Top Cover Assembly, stapler	Table 8-15 (page 543)
C3766-60503	Stapling Bed Assembly	Table 8-15 (page 543)
C3766-60505	Back Plate	Table 8-15 (page 543)
C3766-60506	Hinges, Set of	Table 8-15 (page 543)
C3766-60507	Wire Frame	Table 8-15 (page 543)
C3766-60508	Brushes	Table 8-15 (page 543)
C3766-60509	Stapler Packaging	Table 8-15 (page 543)
C3766-60510	Kit: Plastic staple cover; scan bar bin full sensor, actuator, and flag	Table 8-15 (page 543)
C3766-60511	Kit: T10 Torx screws (10)	Table 8-15 (page 543)
C3766-60512	C-link Cable (97 cm)	Table 8-15 (page 543)
C3766-60539	C-link Cable Assembly 97 cm (8-bin Mailbox to Stapler)	Table 8-1 (page 515) Table 8-13 (page 539)
C3766-60516	Mailbox with Stapler Packaging	Table 8-15 (page 543)
C3914-69001 (ex.)	Maintenance Kit, 100-120V/C3914A	Table 8-1 (page 515)

Download Service Manual And Resetter Printer at http://printer1.blogspot.com

Table 8-19. Numerical Parts List (continued)

Part Number	Description	Table No. and Page
C3915-69001 (ex.)	Maintenance Kit, 220-240V/C3915A	Table 8-1 (page 515)
C4214-40029	Overlay, Control Panel (English)	Table 8-2 (page 519)
C4214-40030	Overlay, Control Panel (French)	Table 8-2 (page 519)
C4214-40031	Overlay, Control Panel (Italian)	Table 8-2 (page 519)
C4214-40032	Overlay, Control Panel (Portuguese)	Table 8-2 (page 519)
C4214-40041	Overlay, Control Panel (German)	Table 8-2 (page 519)
C4214-40042	Overlay, Control Panel (Spanish)	Table 8-2 (page 519)
C4107-67901	Formatter Assembly	Table 8-1 (page 515)
C4107-69001 (ex.)	Formatter Assembly, Exchange	Table 8-1 (page 515)
C4214-69001 (ex.)	Assembly, DC Controller PCB (exchange)	Table 8-8 (page 530)
C4214-69003 (ex.)	Assembly, Laser Scanner (exchange)	Table 8-5 (page 525)
C4214-69004 (ex.)	Paper Input Unit (PIU) (exchange)	Table 8-3 (page 521)
C4214-69007 (ex.)	Fusing Assembly, 110V (exchange)	Table 8-3 (page 521)
C4214-69008 (ex.)	Fusing Assembly, 220V (exchange)	Table 8-3 (page 521)
C4781-60500	Power Box (Includes bracket clip)	Table 8-1 (page 515) Table 8-11 (page 535) Table 8-16 (page 545)
C4781-60501	Jumper Cable, Short	Table 8-1 (page 515) Table 8-11 (page 535) Table 8-16 (page 545)
C4781-60502	Jumper Cable, Long	Table 8-1 (page 515) Table 8-11 (page 535) Table 8-16 (page 545)
C4782-60501 C4782-69501 (ex.)	Duplexer/C4782A	Table 8-1 (page 515)
C4783-70000	C-link Cable (80 cm)	Table 8-17 (page 547)
C4784-60500	Stand for 7-bin Tabletop Mailbox/C4784A	Table 8-1 (page 515) Table 8-17 (page 547)
C4785-60500	8-bin Mailbox Assembly with attachment rod (Whole Unit)	Table 8-1 (page 515) Table 8-12 (page 537)
C4785-60502	Standard Output Bin	Table 8-12 (page 537)
C4785-60503	Blind Cover	Table 8-12 (page 537)
C4785-60504	Front Cover, 8-bin Mailbox	Table 8-12 (page 537)
C4785-60505	Back Cover, 8-bin Mailbox	Table 8-14 (page 541)
C4785-60506	Head Assembly (with Metal Tape)	Table 8-13 (page 539)
C4785-60507	Metal Tape and Housing Assembly	Table 8-13 (page 539)

Download Service Manual And Resetter Printer at http://printer1.blogspot.com

Table 8-19. Numerical Parts List (continued)

Part Number	Description	Table No. and Page
C4785-60508	8-bin Mailbox Controller (with metal box)	Table 8-12 (page 537)
C4785-60509	Flipper Assembly	Table 8-13 (page 539)
C4785-60510	Nonadjustable Fixed Caster	Table 8-12 (page 537)
C4785-60511	Adjustable Fixed Caster	Table 8-12 (page 537)
C4785-60512	Attachment Clip	Table 8-14 (page 541)
C4785-60513	Repackaging Kit	Table 8-13 (page 539)
C4785-60514	3 Diagnostic LED PCA (with Cable)	Table 8-14 (page 541)
C4785-60515	User LED PCA (with Cable)	Table 8-12 (page 537)
C4785-60516	Attachment Assembly (Rod, Bracket, Cables)	Table 8-12 (page 537)
C4785-60518	Transport Belt Motor (with Fan)	Table 8-14 (page 541)
C4785-60519	Plastic Parts	Table 8-12 (page 537) Table 8-13 (page 539) Table 8-14 (page 541)
C4785-60520	Cables	Table 8-14 (page 541)
C4785-60521	Hardware	Table 8-12 (page 537) Table 8-13 (page 539) Table 8-14 (page 541)
C4785-60561	Input Paper Guide (Nose Piece)	Table 8-14 (page 541)
C4785-69500 (ex.)	8-bin Mailbox Assembly without attachment rod (Exchange Unit)	Table 8-12 (page 537)
C4785-70001	Short C-link Cable adapter	Table 8-13 (page 539)
C4787-60500	Stapler Assembly	Table 8-1 (page 515) Table 8-12 (page 537) Table 8-15 (page 543)
C4787-60501	Stapler Control PCA	Table 8-15 (page 543)
C4787-60502	5-bin Mailbox with Stapler/C4787A (8-bin Mailbox only, without the Stapler Unit.)	Table 8-1 (page 515) Table 8-12 (page 537)
C4787-60503	Shipping Lock Kit for 8-bin Mailbox/5-bin Mailbox with Stapler	Table 8-14 (page 541)
C4787-69500 (ex.)	Stapler Assembly (Exchange Unit)	Table 8-12 (page 537) Table 8-15 (page 543)
C4787-69502 (ex.)	5-bin Mailbox - for Stapler Assembly (Exchange Unit)	Table 8-12 (page 537)
R95-3002-000CN	2000-sheet Input Tray (Tray 4)/C4781A	Table 8-1 (page 515) Table 8-11 (page 535)
R95-3003-000CN	2 x 500-sheet Input Tray (Tray 4 and 5)/C4780A	Table 8-1 (page 515) Table 8-16 (page 545)

Download Service Manual And Resetter Printer at http://printer1.blogspot.com

Table 8-19. Numerical Parts List (continued)

Part Number	Description	Table No. and Page
R95-3007-000CN	7-bin Tabletop Mailbox/C4783A	Table 8-1 (page 515) Table 8-17 (page 547)
R98-1006-000CN	Tray 5 Assembly	Table 8-16 (page 545)
R98-1007-000CN	Tray 4 Assembly	Table 8-16 (page 545)
RA2-2408-000CN	Bottom Bin (Tray)	Table 8-17 (page 547)
RA2-2439-000CN	Pin Positioning Bushing	Table 8-17 (page 547)
RA2-2455-000CN	Back Cover, 7-bin Tabletop Mailbox	Table 8-17 (page 547)
RA2-2484-000CN	Bin Full Sensor	Table 8-17 (page 547)
RA2-2485-000CN	Flag, Sensor	Table 8-17 (page 547)
RA2-2487-000CN	Reversing Tray (Face-up)	Table 8-17 (page 547)
RA2-2500-000CN	Support Plate	Table 8-17 (page 547)
RA2-2505-000CN	Bushing	Table 8-17 (page 547)
RA2-2512-000CN	Handle Latch	Table 8-17 (page 547)
RA2-2513-000CN	Spring Tension	Table 8-17 (page 547)
RA2-2527-000CN	Plate, Stopper	Table 8-17 (page 547)
RA2-2531-000CN	Cover Latch	Table 8-17 (page 547)
RA2-2541-000CN	Plate (Motor Cover)	Table 8-17 (page 547)
RA2-3842-000CN	Rail Assembly	Table 8-17 (page 547)
RB1-6409-000CN	Sensor Arm Spring	Table 8-7 (page 529)
RB1-6417-000CN	Sensor Arm PS1	Table 8-7 (page 529)
RB1-6421-000CN	Foot	Table 8-4 (page 523)
RB1-6427-000CN	Stopper, CG	Table 8-5 (page 525)
RB1-6441-000CN	Transfer Guide Bushing	Table 8-3 (page 521)
RB1-6444-000CN	Arm-Pressure-front	Table 8-4 (page 523)
RB1-6446-000CN	Release, Arm	Table 8-4 (page 523)
RB1-6461-000CN	Holder, Damper-Front	Table 8-3 (page 521)
RB1-6462-000CN	Holder, Damper-Rear	Table 8-3 (page 521)
RB1-6464-000CN	Cover, Upper Right	Table 8-4 (page 523)
RB1-6473-000CN	Shutter, White	Table 8-5 (page 525)
RB1-6480-000CN	Cover, Left-Lower	Table 8-2 (page 519)
RB1-6484-000CN	Open/Close Stopper	Table 8-2 (page 519)
RB1-6489-000CN	Electrical Cover (Rear by Formatter)	Table 8-2 (page 519)
RB1-6490-000CN	Tray, Output-Face-down	Table 8-2 (page 519)

Download Service Manual And Resetter Printer at http://printer1.blogspot.com

Table 8-19. Numerical Parts List (continued)

Part Number	Description	Table No. and Page
RB1-6491-000CN	Face-up Bin (engine)	Table 8-1 (page 515) Table 8-2 (page 519)
RB1-6492-000CN	Cover, Switch	Table 8-2 (page 519)
RB1-6493-000CN	Spring, Compression	Table 8-2 (page 519)
RB1-6509-000CN	Spring, Torsion	Table 8-2 (page 519)
RB1-6557-000CN	Arm, Sensor-PS2	Table 8-7 (page 529)
RB1-6558-000CN	Spring, Sensor Arm	Table 8-7 (page 529)
RB1-6582-000CN	Plate, Guide-Upper	Table 8-7 (page 529)
RB1-6615-020CN	Fuser Lock Lever-Right	Table 8-3 (page 521)
RB1-6616-020CN	Fuser Lock Lever-Left	Table 8-3 (page 521)
RB1-6692-000CN	Paper Sensing Lever	Table 8-7 (page 529)
RB1-6693-000CN	Paper Height Lever	Table 8-7 (page 529)
RB1-6749-000CN	Cover, Internal Tray	Table 8-3 (page 521)
RB1-6771-000CN	Guides, Interface	Table 8-6 (page 527)
RB1-6775-000CN	Guide, Slide	Table 8-6 (page 527)
RB1-6776-000CN	Guide, Rail	Table 8-4 (page 523)
RB1-6777-000CN	Stopper, Rail	Table 8-4 (page 523)
RB1-6778-000CN	ROD	Table 8-4 (page 523)
RB1-6783-000CN	Stopper, Rail	Table 8-4 (page 523)
RB1-6894-000CN	Tray Size Plate	Table 8-10 (page 533) Table 8-16 (page 545)
RB1-7677-000CN	Metallic Retaining Tab (Plate Stop)	Table 8-11 (page 535)
RB1-7746-000CN	Tray Shipping Lock	Table 8-11 (page 535)
RB1-7832-020CN	Right Cover, 2000-sheet Input Tray	Table 8-10 (page 533)
RB1-7835-000CN	Metal retaining spring (Spring Leaf)	Table 8-11 (page 535)
RB1-9526-000CN	Multi-Purpose Tray Feed Roller	Table 8-7 (page 529)
RB2-2509-000CN	Clutch cover for 2000-sheet input tray	Table 8-11 (page 535)
RB2-2519-000CN	Back Cover, 2000-sheet Input Tray	Table 8-10 (page 533)
RB2-3503-000CN	Block, Shaft Holding, Front	Table 8-7 (page 529)
RB2-3504-000CN	Block, Shaft Holding, Rear	Table 8-7 (page 529)
RB2-3558-000CN	Delivery Cover (Left Side F/U)	Table 8-2 (page 519)
RB2-3581-000CN	Limiter, torque	Table 8-7 (page 529)
RB2-3622-000CN	Guide, Front	Table 8-4 (page 523)
RB2-3626-000CN	Front Cover (Duplex Jam Removal)	Table 8-2 (page 519)

Download Service Manual And Resetter Printer at http://printer1.blogspot.com

Table 8-19. Numerical Parts List (continued)

Part Number	Description	Table No. and Page
RB2-3631-000CN	Clutch Cover	Table 8-3 (page 521)
RB2-3641-000CN	Hinge Plate	Table 8-2 (page 519)
RB2-3642-000CN	Right, Lower Cover (Rear Plastic on Sheet Metal)	Table 8-2 (page 519)
RB2-3666-000CN	Right Cover, 2 x 500-sheet Input Tray	Table 8-16 (page 545)
RB2-3667-000CN	Holder Size PCA	Table 8-16 (page 545)
RB2-3668-000CN	Front Door (Cover Storage Tray)	Table 8-16 (page 545)
RB2-3669-000CN	Storage Paper Tray	Table 8-16 (page 545)
RB2-3675-000CN	Back Cover, 2 x 500-sheet Input Tray	Table 8-16 (page 545)
RB2-3690-000CN	Clutch cover for 2 x 500-sheet input tray	Table 8-16 (page 545)
RB2-3705-000CN	Spacer, latch	Table 8-16 (page 545)
RB5-1845-000CN	PCB, Tray Sensor	Table 8-8 (page 530)
RF1-4004-000CN	Front Cover, 7-bin Tabletop Mailbox	Table 8-17 (page 547)
RF1-4005-000CN	Latching Mechanism	Table 8-17 (page 547)
RF5-1402-000CN	Cover, Rear	Table 8-2 (page 519)
RF5-1464-000CN	Shield, Plate	Table 8-6 (page 527)
RF5-1484-000CN	Paper Size Guide (Trays 2 and 3)	Table 8-1 (page 515)
RF5-1834-000CN	Feed and Separation Rollers	Table 8-10 (page 533) Table 8-16 (page 545)
RF5-1835-000CN	Pickup Roller, 2000-sheet Input Tray	Table 8-10 (page 533)
RF5-2556-000CN	Locating Pin, Metal (Positioning)	Table 8-10 (page 533) Table 8-16 (page 545)
RF5-2568-000CN	Front Cover (with LED window)	Table 8-10 (page 533)
RF5-2646-000CN	Left Cover, 2000-sheet Input Tray	Table 8-10 (page 533)
RF5-2675-000CN	Roller, Transfer	Table 8-3 (page 521)
RF5-2676-000CN	Transfer Guide	Table 8-3 (page 521)
RF5-2678-000CN	Shield, Formatter	Table 8-6 (page 527)
RF5-2701-000CN	Hinge, Stopper	Table 8-2 (page 519)
RF5-2703-000CN	MP Separation Pad	Table 8-7 (page 529)
RF5-2708-000CN	Roller, Pickup	Table 8-7 (page 529) Table 8-16 (page 545)
RF5-2726-000CN	Guide, Rear	Table 8-4 (page 523)
RF5-2762-000CN	Front Top Cover	Table 8-16 (page 545)
RF5-2764-000CN	Left Cover, 2 x 500-sheet Input Tray	Table 8-16 (page 545)

Download Service Manual And Resetter Printer at http://printer1.blogspot.com

Table 8-19. Numerical Parts List (continued)

Part Number	Description	Table No. and Page
RF5-2766-000CN	Top Cover (Includes label), 2 x 500-sheet Input Tray	Table 8-16 (page 545)
RF5-3850-000CN	Plate Paper Reference Front	Table 8-10 (page 533)
RF7-1395-000CN	Reversing Mechanism Motor	Table 8-17 (page 547)
RF9-1249-000CN	Top Cover Assembly	Table 8-2 (page 519)
RG1-3814-000CN	Full Bin and Interlock sensor PCA	Table 8-17 (page 547)
RG1-3815-000CN	Empty Bin Sensor PCA	Table 8-17 (page 547)
RG1-3816-000CN	Face-up Bin Full and Sensor PCA	Table 8-17 (page 547)
RG1-3817-000CN	LED PCA	Table 8-17 (page 547)
RG1-3836-000CN	Face-down Bin Assembly, Odd (with 1 roller)	Table 8-17 (page 547)
RG1-3837-000CN	Face-down Bin Assembly, Even (with 2 rollers)	Table 8-17 (page 547)
RG1-3838-000CN	Top Cover Assembly (Upper Guide), 7-bin Tabletop Mailbox	Table 8-17 (page 547)
RG1-3840-000CN	Right Cover Assembly, 7-bin Tabletop Mailbox	Table 8-17 (page 547)
RG1-3844-000CN	Diverter Assembly (Flipper)	Table 8-17 (page 547)
RG1-3853-000CN	7-bin Tabletop Mailbox Controller PCA Assembly	Table 8-17 (page 547)
RG5-1843-000CN	Sensor Cable	Table 8-7 (page 529)
RG5-1845-000CN	Tray-Size Sensing PCA	Table 8-16 (page 545)
RG5-1846-000CN	PCB, Switch/Sensor	Table 8-8 (page 530)
RG5-1850-000CN	Cable, Fuser 2	Table 8-6 (page 527)
RG5-1859-000CN	Cable, Sensor	Table 8-7 (page 529)
RG5-1860-000CN	PCA, PIU	Table 8-7 (page 529)
RG5-1861-000CN	Cable, Paper Pickup	Table 8-7 (page 529)
RG5-1874-000CN	Face-down Delivery Assembly	Table 8-3 (page 521) Table 8-7 (page 529)
RG5-1875-000CN	Face-up Solenoid Assembly	Table 8-9 (page 531)
RG5-1884-000CN	PCB, Tray, Multi-purpose	Table 8-8 (page 530)
RG5-1915-000CN	Right Cover Assembly, engine	Table 8-2 (page 519)
RG5-1920-000CN	Cable, Tray Sensor	Table 8-4 (page 523)
RG5-1921-000CN	Cable, Fan 1	Table 8-6 (page 527)
RG5-1928-000CN	Cable, Registration	Table 8-6 (page 527)
RG5-2166-000CN	Paper Quantity Sensor PCA Assembly	Table 8-11 (page 535)
RG5-2168-000CN	Paper Size Sensor PCA Assembly	Table 8-11 (page 535)
RG5-2644-000CN	Top Cover (Label Included), 2000-sheet Input Tray	Table 8-10 (page 533)

Download Service Manual And Resetter Printer at http://printer1.blogspot.com

Table 8-19. Numerical Parts List (continued)

Part Number	Description	Table No. and Page
RG5-3843-000CN	Paper Pickup Assembly, 2000-sheet Input Tray	Table 8-10 (page 533)
RG5-3845-000CN	2000-sheet Input Tray Paper Tray	Table 8-10 (page 533)
RG5-3849-000CN	Plate Paper Limit Middle	Table 8-10 (page 533)
RG5-3851-000CN	Paper Deck Drive Assembly, 2000-sheet Input Tray	Table 8-10 (page 533)
RG5-3852-000CN	Outrigger, 2 x 500-sheet Input Tray	Table 8-16 (page 545)
RG5-3853-000CN	Feet Adjustable Tip	Table 8-11 (page 535) Table 8-16 (page 545)
RG5-3854-000CN	Vertical Transfer Unit (VTU)	Table 8-10 (page 533)
RG5-3908-000CN	Paper Deck PCA (2000-sheet Input Tray Controller)	Table 8-11 (page 535)
RG5-3909-000CN	Power Supply Cable (PSU)	Table 8-11 (page 535) Table 8-16 (page 545)
RG5-3919-000CN	Main Cable, 2000-sheet Input Tray	Table 8-11 (page 535)
RG5-3951-000CN	Tray 2	Table 8-1 (page 515)
RG5-3952-000CN	Tray 3	Table 8-1 (page 515)
RG5-4021-000CN	Universal Power Supply Assembly	Table 8-11 (page 535) Table 8-16 (page 545)
RG5-4201-000CN	Plate Paper Limit Back	Table 8-10 (page 533)
RG5-4204-000CN	Front LED PCA with holder and cable	Table 8-11 (page 535)
RG5-4205-000CN	Outrigger, 2000-sheet Input Tray	Table 8-11 (page 535)
RG5-4300-000CN	Power Supply, Low-Voltage 110 V	Table 8-6 (page 527)
RG5-4301-000CN	Power Supply, Low Voltage-220 V	Table 8-6 (page 527)
RG5-4303-000CN	Registration Assembly	Table 8-3 (page 521)
RG5-4304-000CN	Assembly, Transfer Roller	Table 8-3 (page 521)
RG5-4305-000CN	Feeder Assembly	Table 8-3 (page 521) Table 8-7 (page 529)
RG5-4306-000CN	High-Voltage Power Supply	Table 8-5 (page 525)
RG5-4315-000CN	Fusing Assembly, 110V	Table 8-3 (page 521)
RG5-4317-000CN	Fusing Assembly, 220V	Table 8-3 (page 521)
RG5-4325-000CN	Diverter Assembly	Table 8-2 (page 519)
RG5-4329-000CN	MP Tray Assembly Cover (Tray 1)	Table 8-3 (page 521)
RG5-4330-000CN	Multi-purpose Tray Assembly (Tray 1)	Table 8-3 (page 521) Table 8-7 (page 529)
RG5-4334-000CN	Assembly, Paper Pickup	Table 8-7 (page 529)
RG5-4344-000CN	Assembly, Laser Scanner	Table 8-5 (page 525)

Download Service Manual And Resetter Printer at http://printer1.blogspot.com

Table 8-19. Numerical Parts List (continued)

Part Number	Description	Table No. and Page
RG5-4360-000CN	Top Cover Assembly	Table 8-2 (page 519)
RG5-4362-000CN	Front Cover, engine	Table 8-2 (page 519)
RG5-4365-000CN	Printer Drive Assembly	Table 8-3 (page 521)
RG5-4375-000CN	Assembly, DC Controller PCB	Table 8-8 (page 530)
RG5-4377-000CN	Laser and Control Panel Cable	Table 8-5 (page 525)
RG5-4378-000CN	Cable, Scanner Motor	Table 8-5 (page 525)
RG5-4381-000CN	Cable, Fuser 1	Table 8-6 (page 527)
RG5-4384-000CN	Display, Control Panel	Table 8-2 (page 519)
RG5-4386-000CN	Main Motor Cable	Table 8-3 (page 521)
RG5-4403-000CN	Paper Feed Assembly (Vertical Transfer Unit)	Table 8-16 (page 545)
RG5-4410-000CN	Paper Pickup Assembly, 2 x 500-sheet Input Tray	Table 8-16 (page 545)
RG5-4416-000CN	Paper Deck Drive Assembly, 2 x 500-sheet Input Tray	Table 8-16 (page 545)
RG5-4434-000CN	Paper Input Unit (PIU)	Table 8-3 (page 521)
RG5-4440-000CN	Main Cable, 2 x 500-sheet Input Tray	Table 8-16 (page 545)
RG5-4441-000CN	Front LED PCA	Table 8-16 (page 545)
RG5-4442-000CN	2 x 500-sheet Input Tray Controller PCA	Table 8-16 (page 545)
RH3-2205-000CN	Power Supply (7-bin Tabletop Mailbox)	Table 8-17 (page 547)
RH7-1266-000CN	Fan, FM2/Laser Scanner	Table 8-5 (page 525)
RH7-1271-000CN	Fan, FM3/Formatter	Table 8-6 (page 527)
RH7-1289-000CN	Fan, FM4/Delivery Assembly	Table 8-7 (page 529)
RH7-1350-000CN	Motor, PIU	Table 8-7 (page 529)
RH7-1396-000CN	Fan, FM1/Low Voltage Power Supply	Table 8-6 (page 527)
RH7-1397-000CN	Fan, FM5	Table 8-7 (page 529)
RH7-5187-000CN	Electromagnetic Clutch	Table 8-3 (page 521)
RH7-5188-000CN	Clutch, Paper Feed	Table 8-7 (page 529)
RH7-5219-000CN	Main Motor	Table 8-3 (page 521)
RH7-5223-000CN	Solenoid Reversing Mechanism	Table 8-17 (page 547)
RH7-5225-000CN	Solenoid Flipper	Table 8-17 (page 547)
RS5-1127-000CN	Gear, 20T	Table 8-2 (page 519)
RS5-1399-000CN	Paper Deck Drive Bushing	Table 8-10 (page 533)
RS5-2499-000CN	Spring, Tension	Table 8-4 (page 523)
RS5-2561-000CN	Tension Spring	Table 8-11 (page 535)

Download Service Manual And Resetter Printer at http://printer1.blogspot.com

Table 8-19. Numerical Parts List (continued)

Part Number	Description	Table No. and Page
RS5-8605-000CN	Paper Size Guide Label (Trays 2 and 3)	Table 8-1 (page 515)
RS5-8611-000CN	Tray Size Labels	Table 8-10 (page 533) Table 8-16 (page 545)
RS5-8676-000CN	Label, Operation	Table 8-2 (page 519)
RS6-2072-000CN	Compression Spring, Front	Table 8-7 (page 529)
RS6-2073-000CN	Compression Spring, Rear	Table 8-7 (page 529)
RY7-5044-000CN	2K (2000-sheet Input Tray) Deck Hardware Kit	Table 8-10 (page 533) Table 8-11 (page 535)
RY7-5048-000CN	Hardware Screws Kit for 7-bin Tabletop Mailbox	Table 8-17 (page 547)
VD7-1893-151CN	Power Supply Fuse 250V/3.15A	Table 8-11 (page 535) Table 8-16 (page 545)
WG8-0291-000CN	Photo Interrupter	Table 8-7 (page 529)
XA9-0605-000CN	Screw, M4 x 8	Table 8-2 (page 519)
XA9-0870-000CN	Screw, M4 x 10	Table 8-2 (page 519)
XA9-0872-000CN	Screw, M3 x 8	Table 8-2 (page 519)
XB6-7400-807CN	Screw, M4 x 8 TP	Table 8-3 (page 521)
XZ9-0379-000CN	Latch	Table 8-16 (page 545)
XZ9-0442-000CN	Caster	Table 8-10 (page 533) Table 8-16 (page 545)

Download Service Manual And Resetter Printer at http://printer1.blogspot.com

Index

Numerics

2 x 500-sheet input tray (trays 4 & 5)
adjustable foot tip 294
adjustment procedure 90
back cover 267
casters 293
controller PCA 285
diagnostics 449
dimensions 7
electrical specifications 9
front door (storage area) 292
front LED PCA 296
identification label 6
left cover 268
locating pins 295
main cable 289
ordering 18
orientation 266
paper deck drive assembly 282
paper paths and components 126
parts and diagrams 545
pickup and feed system 128
pickup assembly 280
power supply 129, 288
printing from 125
removing and replacing 157
right cover 272
rollers 284
specifications 4, 7
storage paper tray 291
tray-size sensing PCA 286
verifying installation 468
vertical transfer unit 269
weight 7
2000-sheet input tray (tray 4)
adjustable foot 264
adjustment procedure 92
back cover 238
casters 263
clutches 122
controller PCA 246
diagnostic tests 445
dimensions 7
electrical specifications 9
features 121
front cover 237
front LED PCA assembly 248
identification label 6
LEDs 448
left cover 239
lifter operation 125
locating pins 262
main cable harness 244
main drive assembly 241
motor test 445
motors 122
ordering 18
orientation 236
paper paths and components 121
paper quantity switch assembly 257
paper size switch assembly 257
paper tray 243
pickup and feed system 123
pickup assembly 250
power supply 125, 252
printing from 125
removing and replacing 157
right cover 240
rollers 254
sensor test 447
sensors 122
specifications 4, 7
stand-alone running test 445
switches 122
tension springs 261
troubleshooting 385, 386
verifying installation 468
vertical transfer unit (VTU) 259
weight 7
wiring diagram 509
2-sided printing 120
5-bin mailbox with stapler, *see* mailbox with stapler
7-bin tabletop mailbox 159
back cover 302
collator mode 134
configurable stacker mode 134
controller PCA 308
cover latch 333
diagnostics 453
dimensions 8
electrical specifications 9
empty bin sensor 317
face-down bins 314
face-up sensors PCA 322
face-up/diverter assembly (flipper) 325
flipper solenoid 330
front cover 299

Download Service Manual And Resetter Printer at http://printer1.blogspot.com

full bin and interlock sensor PCA 319
handle 331
identification label 6
latching mechanism 332
modes 133
operation 132
ordering 18
orientation 298
paper paths and components 130
parts and diagrams 547
power supply 309
removing and replacing 159, 297
reversing mechanism 323
right door assembly (paper path cover) 310
short tray 7 328
solenoid reversing mechanism 329
specifications 5
stand
dimensions and weight 8
ordering 19
verifying installation 468
weight 8
8-bin mailbox
anticurl strings 352
attachment assembly 365
back cover 336
blind cover 339
casters 364
collator mode 140
components 136
controller PCA 137, 350
delivery head assembly 139, 354
delivery head motor 343
diagnostic LED PCA 360
dimensions 8, 46
electrical specifications 9
features 136
flipper assembly 139, 340
front cover 336
identification label 6
input paper guide 346
interlock switch 359
job separator mode 140
LEDs 461
mailbox mode 140
metal tape and housing assembly 348
motors 137
operating modes 136, 139
operation 139
ordering 18
orientation 335
paper bins 339
paper jams 387
paper path 136, 460
power box 22
power supply 338
power-on sequence 139, 459
receiving paper 139
removing and replacing 158
sensors 137
space requirements 46
specifications 5, 8
stand-alone diagnostics 458
stapler operation 143
status LED PCA 362
switches 137
testing 458
transport belt motor 344
troubleshooting 385, 387
verifying installation 468
virtual stacker mode 140
weight 8
wiring diagram 510

A

AC access cover (printer) 168
AC power
distribution 98
troubleshooting 391
accessories
locations 17
ordering 18
user installable 154
verifying installation 468
accessories *see also* paper-handling devices
acoustic emissions 10
adhesive labels, *see* labels
adjustable foot
2 x 500-sheet input tray 294
2000-sheet input tray 264
anticurl strings (8-bin mailbox) 352
attachment assembly (8-bin mailbox) 365
attention light 52

B

back plate (stapler) 369
background scatter 482
bed assembly (stapler) 375
bins
configuring
7-bin tabletop mailbox 133
8-bin mailbox 139
specifications 4, 8
bins (removing and replacing)
7-bin tabletop mailbox 314
8-bin mailbox 339
black lines 480
black page 477

Download Service Manual And Resetter Printer at http://printer1.blogspot.com

blank page
  entire 477
  middle of page 489
  partial 488
bubble print 487

C

cable harness (2000-sheet input tray) 244
cables
  c-link
    input and output 146
    troubleshooting 473
  main (2 x 500-sheet input tray) 289
  ordering 21
  parallel 150
cancel job key 51
capacity of paper trays 4
cartridge slots 2
casters
  2 x 500-sheet input tray 293
  2000-sheet input tray 263
  8-bin mailbox 364
cleaning
  printer and accessories 86
  spilled toner 88
  toner cartridge drum 108
clutches
  2000-sheet input tray 122
  diagram 500
  drive signals 103
  locations 116
cold reset
  paper size 53, 77, 80
  performing 54
collator mode
  7-bin tabletop mailbox 134
  8-bin mailbox 140
communications link, *see* cables, c-link
compressed print 489
configurable stacker mode (7-bin tabletop mailbox) 134
configuration menu 67
configuration page
  printing 81
  troubleshooting 468
consumables 27
control panel
  default settings 52
  display 57
  keys 50
  language 54
  layout 50
  lights 51
  overriding settings 52, 403
  removing and replacing 165
  troubleshooting 395
control panel menus 57
  configuration 67
  EIO 74
  I/O 72
  information 59
  map 83, 467
  paper handling 60
  print quality 62
  printing 64
  resets 76
  service mode 77
controller PCA
  2 x 500-sheet input tray 285
  2000-sheet input tray 246
  7-bin tabletop mailbox 308
  8-bin mailbox 137, 350
  DC (printer) 211
  stapler 371
covers
  2 x 500-sheet input tray
    back 267
    front top 275
    left 268
    right 272
  2000-sheet input tray
    back 238
    front 237
    left 239
    right 240
  7-bin tabletop mailbox
    back 302
    front 299
    latch 333
    top 304
  8-bin mailbox
    back 336
    blind 339
    front 336
  cleaning 88
  printer
    AC access 168
    back 169
    front 170
    left lower 172
    top 173
  stapler
    top 374
curl (paper) 390

D

daisy chain connections 473
data light 51
DC controller PCA
  diagrams 501
  functions 103
  removing 211

Download Service Manual And Resetter Printer at http://printer1.blogspot.com

DC power 97
default settings
control panel 52
restoring 76
delivery head assembly (8-bin mailbox) 139, 354
delivery head motor (8-bin mailbox) 343
delivery unit (face-down output bin)
fan 188
removing 176
diagnostic LED PCA (8-bin mailbox) 360
diagnostics on paper-handling devices 445
diagrams
how to use 512
list 498
dimensions of printer and accessories 8, 45
dimensions of printer and paper-handling devices 7
DIMM *see* memory
DIP switches
changing 447
settings 447
disk, *see* hard disk
diverter assembly
7-bin tabletop mailbox 325
door 180
removing and replacing 179
documentation 22
door assembly
7-bin tabletop mailbox 310
printer right lower 181
draft mode, *see* EconoMode
drive assembly (2000-sheet input tray) 241
driver
overriding control panel settings 52, 403
troubleshooting 497
dropouts 480
drum
cleaning 108
conditioning 109
rotation functional check 493
duplexer
dimensions 8
memory requirements 25
operation 120
ordering 18
paper paths and components 116
removing and replacing 156
specifications 5
speed 2
standard or optional 3
verifying installation 468
weight 8
duty cycle 2

E

EconoMode 102
EDO DIMMs *see* memory
8-bin mailbox
anticurl strings 352
attachment assembly 365
back cover 336
blind cover 339
casters 364
collator mode 140
components 136
controller PCA 137, 350
delivery head assembly 139, 354
delivery head motor 343
diagnostic LED PCA 360
dimensions 8, 46
electrical specifications 9
features 136
flipper assembly 139, 340
front cover 336
identification label 6
input paper guide 346
interlock switch 359
job separator mode 140
LEDs 461
mailbox mode 140
metal tape and housing assembly 348
motors 137
operating modes 136, 139
operation 139
ordering 18
orientation 335
paper bins 339
paper jams 387
paper path 136, 460
power box 22
power supply 338
power-on sequence 139, 459
receiving paper 139
removing and replacing 158
sensors 137
space requirements 46
specifications 5, 8
stand-alone diagnostics 458
stapler operation 143
status LED PCA 362
switches 137
testing 458
transport belt motor 344
troubleshooting 385, 387
verifying installation 468
virtual stacker mode 140

Download Service Manual And Resetter Printer at http://printer1.blogspot.com

weight 8
wiring diagram 510
EIO cards
ordering 22
standard 3
status 81
EIO menu 74
electrical specifications 9
electrostatic discharge sensitive (ESD) 152
EMI statement for Korea 40
engine test
microswitch 104
troubleshooting 394
envelope feeder
dimensions 8
ordering 18
paper paths and components 116
printing from 120
removing and replacing 156
specifications 5
verifying installation 468
weight 8
envelopes
guidelines 11
paper jams 387
troubleshooting 386, 388
environment
operating 44
requirements 47
environmental product stewardship 34
ESD 152
event log
clearing 77
listed on configuration page 82
troubleshooting 395
using 395
exchange program 27
exhaust
fan 1 (laser/scanner) 184
fan 2 (lvps) 186
fan 4 (delivery unit) 188

F

face-down bins
7-bin tabletop mailbox 314
8-bin mailbox 339
delivery unit 176
specifications 4
face-up solenoid assembly 231
face-up/diverter assembly (flipper) (7-bin tabletop mailbox) 325
factory settings 52
fading print 387, 478
fans
fan 1 (laser/scanner) 184
fan 2 (lvps) 186
fan 3 (formatter) 187
fan 4 (delivery unit) 188
fan 5 (tray 1 intake) 189
locations 116
motors 104
faulty registration 486
FCC statement 33
feeder assembly 198
field replaceable units, ordering 26
finisher components 141
Finland laser statement 40
5-bin mailbox with stapler, *see* mailbox with stapler
flash DIMMs (ordering) 21
see also memory
flashing light 51
flipper assembly
7-bin tabletop mailbox 325
8-bin mailbox 340
fonts
internal 2
ordering 21
foot
2 x 500-sheet input tray 294
2000-sheet input tray 264
formatter assembly
fan 187
function 100
part locations 16
removing 200, 201
retaining settings 79
front LED PCA
2 x 500-sheet input tray 296
2000-sheet input tray 248
front top cover (2 x 500-sheet input tray) 275
FRUs, *see* field replaceable units
FTP technical assistance 30
full bin sensor PCA (7-bin tabletop mailbox) 319
functional block diagram 96
fusing assembly
cleaning 88
removing 202
fusing images
about 115
troubleshooting 388

G

gear assembly 206
go key 50

Download Service Manual And Resetter Printer at http://printer1.blogspot.com

H

half self test functional check 492
handle (7-bin tabletop mailbox) 331
hard disk
  about 24
  ordering 21
  removing and replacing 155
  standard or optional 3
  verifying installation 468
hardware table 162
Hardware Technical Support Center (HTSC) 30
high voltage power supply
  check 493
  contacts 99, 106
  distribution 99
  removing and replacing 219
hinges (stapler) 377
HP ASAP (Automated Support Access Program) 29
HP distribution center 26
HP FIRST (Fax Information Retrieval Support Technology) 29
HP JetDirect print server card, *see* EIO cards
HP JetDirect Print Server Software Installation Guide 22
HP JetSend IP addresses 82
HP LaserJet Printer Family Paper Specification Guide 22
HP reseller sales and service support 30
HP support line 26
HTSC, *see* Hardware Technical Support Center
humidity 47
hvps, *see* high voltage power supply

I

I/O
  menu 72
  troubleshooting 473
identification 6
image formation
  block diagram 105
  developing 112
  fusing 115
  system 105
  transferring 114
  writing 110
image quality 475
image skew 386, 486
images per month 2
indicator lights 51
information menu 59
input paper guide (8-bin mailbox) 346
intake
  fan 3 (formatter) 187
  fan 5 (tray 1) 189
interface
  accessories 21
  standard 3
interlock sensor PCA (7-bin tabletop mailbox) 319
interlock switch (8-bin mailbox) 359
internet technical assistance 30
IP addresses 82
item key 51

J

JetSend 82
job separator mode
  7-bin tabletop mailbox 133
  8-bin mailbox 140

K

keys on control panel 50
Korean EMI statement 40

L

labels
  adhesive 12
  paper jams 387
  printer identification 6
language on control panel 54
languages (personalities)
  removing and replacing 154
  standard printer 2
  status 81
  verifying installation 468
laser statement for Finland 40
laser/scanner
  assembly 204
  drive 103
  fan 184
  motors 104
latching mechanism (7-bin tabletop mailbox) 332
LED
  2 x 500-sheet input tray front LED PCA 296
  2000-sheet input tray 448
  2000-sheet input tray front LED PCA 248
  7-bin tabletop mailbox LED PCA 321
  8-bin mailbox 461
    diagnostic 360
    status 362
  interpreting status 448, 458, 461
  troubleshooting 452
left output bin specifications 4

Download Service Manual And Resetter Printer at http://printer1.blogspot.com

light print 387, 478
lights on control panel 51
lines
  black 480
  edge of paper 484
  white 488
LocalTalk cable 21
locating pins
  2 x 500-sheet input tray 295
  2000-sheet input tray 93, 262
low voltage power supply
  distribution system 97
  removing and replacing 220
lvps, *see* low voltage power supply

M

Macintosh network cable kit (ordering) 21
mailbox mode
  7-bin tabletop mailbox 133
  8-bin mailbox 140
mailbox with stapler
  electrical specifications 9
  identification label 6
  operation 143
  ordering 18
  paper jams 387
  removing and replacing 158
  specifications 5
  troubleshooting 387
  verifying installation 468
  wiring diagram 506
main cable harness (2000-sheet input tray) 244
main drive assembly (2000-sheet input tray) 241
main gear assembly 206
maintenance
  kit, ordering 22
  preventative 89
  setting count 79, 200
manuals 22
mass storage, *see* hard disk drive
media separation 114
media, *see* paper
memory
  installing
  ordering 21
  removing and replacing 154
  requirements 24
  standard 3
  status 81
  verifying installation 468
menu key 50
menu map page 83, 467
menus, *see* control panel menus
metal tape and housing assembly (8-bin mailbox) 348
minus key 51
model number 6
monthly usage 2
motor
  assembly 209
  test 445
motors
  2000-sheet input tray 122
  7-bin tabletop mailbox reversing mechanism 323
  8-bin mailbox 137
  8-bin mailbox transport belt 344
  diagram 500
  fan 1 185
  fan 3 187
  locating 116
  main assembly 209
  operation 104
  verifying functionality 445
multi-purpose tray, *see* tray 1

N

network cards, *see* EIO cards
network troubleshooting 473
noise
  emissions 10
  troubleshooting 385

O

operating
  environment 44
  overview 49
options, *see* accessories
ordering parts 26, 512
output paper sensor PCA 212
overcurrent/overvoltage protection 98
overhead transparencies, *see* transparencies
overriding control panel settings 52, 403

P

page count
  determining 82
  setting 77, 79, 200
  troubleshooting 386
page skew 386, 486
pages per minute (ppm) 2
paper
  delivery 139
  ordering 20
  sizes and memory requirements 25
  specifications 4, 11

Download Service Manual And Resetter Printer at http://printer1.blogspot.com

specifications guide 22
storing 13
paper deck drive assembly (2 x 500-sheet input tray)
operation 124, 128
removing and replacing 282
paper guide (8-bin mailbox) 346
paper handling menu 60
paper input unit (PIU)
removing and replacing 210
sensor 227
paper jams
8-bin mailbox or mailbox with stapler 387
detection 148
troubleshooting 399, 400, 403
paper motion monitoring and control 103
paper path
cleaning 87
test 81, 402, 460
troubleshooting 399
paper path cover (7-bin tabletop mailbox) 310
paper size
cold reset 53, 77, 80
PCA 216
paper size switches
2 x 500-sheet input tray 128
2000-sheet input tray 257
trays 2 & 3 119
paper source default 53
paper tray
capacities 4
paper-handling devices
diagnostics 445
dimensions 7
locations 17
ordering 18
parts and diagrams 514
specifications 4, 7
verifying installation 468
parallel cables
ordering 21
pin configuration 150
specifications 150
parts
diagrams 511
locations 14
ordering 26, 512
PCL
fonts 2
memory requirements 25
PCL 5/PJL Technical Reference Documentation Package 22
PCL 5e and PCL 6 2
personalities, *see* languages
phone numbers
ordering parts 26
technical assistance 29
PhoneNET cable 21
photosensitive drum 107
pickup assembly
2 x 500-sheet input tray 280
2000-sheet input tray 250
tray 1 194
pins (locating)
2 x 500-sheet input tray 295
2000-sheet input tray 93, 262
PIU, *see* paper input unit
plus key 51
PM kit, *see* preventative maintenance
PostScript Level 2 emulation (PS)
fonts 2
memory requirements 25
power box 22
power distribution system 97
power rating 6
power save mode
description 100
electrical specifications 9
power supply
2 x 500-sheet input tray 129, 288
2000-sheet input tray 252
7-bin tabletop mailbox 309
8-bin mailbox 338
operation (2000-sheet input tray or 2 x 500-sheet input tray 125
see also high voltage power supply or low voltage power supply
power-up sequence test 459
ppm, *see* pages per minute
preventative maintenance
about 89
count 79, 200
ordering kit 22
print quality
cleaning printer 86
menu 62
troubleshooting 475
print settings
density adjustment 99
resolution 2
speed 2
printer
comparisons of features 3
dimensions 7, 8, 45
electrical specifications 9
features 2
paper paths and components 116
part locations 511
specifications 7
testing 81

Download Service Manual And Resetter Printer at http://printer1.blogspot.com

printer stand (7-bin tabletop mailbox)
dimensions and weight 8
ordering 19
printing
supplies 20
printing menu 64
PS, *see* PostScript Level 2 emulation
PS1, *see* registration sensor
PS2, *see* paper input unit sensor

R

ready light 51
recycling toner cartridges 28
registration assembly
cleaning roller 87
removing and replacing 221
sensor 229
registration faulty 486
regulatory information 6
remanufactured assemblies 27
removal and replacement
strategy 152
repair process 26
repetitive defects
ruler 491
troubleshooting 483
resets menu 76
resetting printer 54
resolution 2
resolution enhancement (REt) 2, 101
reversing mechanism (7-bin tabletop mailbox)
motor 323
solenoid 329
rollers
2 x 500-sheet input tray 284
2000-sheet input tray
pickup, feed, and separation 254
separation roller 124
cleaning, pickup, and feed 88
transfer 232
tray 1 224
trays 2 & 3 226

S

scanner, *see* laser/scanner
screws hardware table 162
SDRAM DIMMs, ordering 21
see also memory
select key 51
self test, *see* configuration page
sensors
2000-sheet input tray 122
7-bin tabletop mailbox
empty bin 317
face-up 322
full bin and interlock 319
8-bin mailbox 137
PSEntry 139
PSFaceUp 139
activating 447
diagram 499
locating 116
output paper 212
paper input unit (PIU) 227
registration 229
testing 447
separation pad
cleaning 88
tray 1 225
serial number
configuration page 82
location 6
setting 77, 79, 200
troubleshooting 386
server troubleshooting 497
service
approach 26
during and after the warranty 32
mode 77
ordering manuals 23
settings and defaults 403
7-bin tabletop mailbox
back cover 302
collator mode 134
configurable stacker mode 134
controller PCA 308
cover latch 333
diagnostics 453
dimensions 8
electrical specifications 9
empty bin sensor 317
face-down bins 314
face-up sensors PCA 322
face-up/diverter assembly (flipper) 325
flipper solenoid 330
front cover 299
full bin and interlock sensor PCA 319
handle 331
identification label 6
latching mechanism 332
modes 133
operation 132
ordering 18
orientation 298
paper paths and components 130
parts and diagrams 547
power supply 309
removing and replacing 159, 297
reversing mechanism 323
short tray 7 328

Download Service Manual And Resetter Printer at http://printer1.blogspot.com

solenoid reversing mechanism 329
specifications 5
stand
dimensions and weight 8
ordering 19
top cover 304
verifying installation 468
weight 8
short tray 7 (7-bin tabletop mailbox) 328
site requirements 43
skew 386, 486
slides, *see* transparencies
SME, *see* Support Materials Europe
smeared toner 481
SMO, *see* Support Materials Organization
solenoids
7-bin tabletop mailbox
flipper 330
reversing mechanism 329
diagram 500
face-up assembly (printer) 231
locations 116
space requirements 45
specifications
acoustic emissions 10
electrical 9
guide, ordering 22
paper 11
paper trays, bins, and accessories 4
printer and paper-handling devices 7
specks 482
speed (pages per minute) 2
stacker mode
8-bin mailbox 140
stacker mode (7-bin tabletop mailbox) 134
stand (7-bin tabletop mailbox)
dimensions and weight 8
ordering 19
standard output bins
specifications 8
stapler
back plate 369
controller PCA 371
dimensions 8
hinges 377
non-HP cartridges 28
operation 143
paper jams 387
paper paths and components 141
parts and diagrams 529, 531, 543
removing and replacing 366
stapler bed assembly 375
top cover 374
verifying installation 468
weight 8
storage paper tray (2 x 500-sheet input tray) 291
supplies
ordering information 18
Support Materials Europe (SME) 26, 512
Support Materials Organization (SMO) 26, 512
switches
2 x 500-sheet input tray, paper size 128
2000-sheet input tray 122
8-bin mailbox 137
detecting tray 125
diagram 499
function 123, 128
paper quantity 123
paper size 123
trays 2 & 3 (paper size) 119

T

technical assistance 29
temperature (printer) 47
tension springs (2000-sheet input tray) 261
test
paper-handling devicess 445
printer 81, 402, 468
timing (printer) 148
toner cartridge
cleaning spills 88
contacts 99, 106
detection 99
image formation 106
life expectancy 27
ordering 20
recycling 28
refilled 28
troubleshooting 476
warranty 28
weight 7
toner smear 481
tools 153
transfer roller assembly
cleaning 88
removing and replacing 232
transparencies
guidelines 13
paper jams 387
transport belt motor
8-bin mailbox 344
tray
selection
default paper source 53
troubleshooting 386, 388
tray 1
pickup assembly 194
printing from 119

Download Service Manual And Resetter Printer at http://printer1.blogspot.com

removing and replacing 191
specifications 4
tray 7 (7-bin tabletop mailbox) 328
trays 2 & 3
adjustment procedure 90
pickup motor 104
printing from 119
removing and replacing 234
specifications 4
trays 4 & 5, removing and replacing 278
tray-size sensing PCA (2 x 500-sheet input tray) 286
troubleshooting
c-link cables 473
communication 473
control panel 395
diagnostic tools 445, 458
drum rotation functional check 493
engine test 394
event log 395, 405
general 385
half self test functional check 492
high voltage power supply check 493
image defects 477
image quality 475
interface 495
paper curl 390
paper jams 399, 400, 403
paper-handling devices 445
power-on 391
print quality 475
printer stops/hangs 387
process 380
toner cartridge 476
2 x 500-sheet input tray (trays 4 & 5)
adjustable foot tip 294
back cover 267
casters 293
controller PCA 285
diagnostics 449
dimensions 7
electrical specifications 9
front door (storage area) 292
front LED PCA 296
front top cover 275
identification label 6
left cover 268
locating pins 295
main cable 289
ordering 18
orientation 266
paper deck drive assembly 282
paper paths and components 126
parts and diagrams 545
pickup and feed system 128
pickup assembly 280
power supply 129, 288
printing from 125
removing and replacing 157
right cover 272
rollers 284
specifications 4, 7
storage paper tray 291
tray-size sensing PCA 286
verifying installation 468
vertical transfer unit 269
weight 7
2-sided printing 120
2000-sheet input tray (tray 4)
adjustable foot 264
adjustment procedure 92
back cover 238
casters 263
clutches 122
controller PCA 246
diagnostic tests 445
dimensions 7
electrical specifications 9
features 121
front cover 237
front LED PCA assembly 248
identification label 6
LEDs 448
left cover 239
lifter operation 125
locating pins 262
main cable harness 244
main drive assembly 241
motor test 445
motors 122
ordering 18
orientation 236
paper paths and components 121
paper quantity switch assembly 257
paper size switch assembly 257
paper tray 243
pickup and feed system 123
pickup assembly 250
power supply 125, 252
printing from 125
removing and replacing 157
right cover 240
rollers 254
sensor test 447
sensors 122
specifications 4, 7
stand-alone running test 445
switches 122
tension springs 261
troubleshooting 385, 386
verifying installation 468
vertical transfer unit (VTU) 259

Download Service Manual And Resetter Printer at http://printer1.blogspot.com

weight 7
wiring diagram 509
typefaces, *see* fonts

U

user guide 22

V

value key 51
VCCI statement (Japan) 39
vertical transfer unit
2 x 500-sheet input tray 269
2000-sheet input tray 259
virtual stacker mode
8-bin mailbox 140

W

warranty 31
white lines 488
white page 477
wiring diagram
2000-sheet input tray 509
8-bin mailbox 510
mailbox with stapler 506
printer, *see foldout pages*
world wide web, technical assistance 30

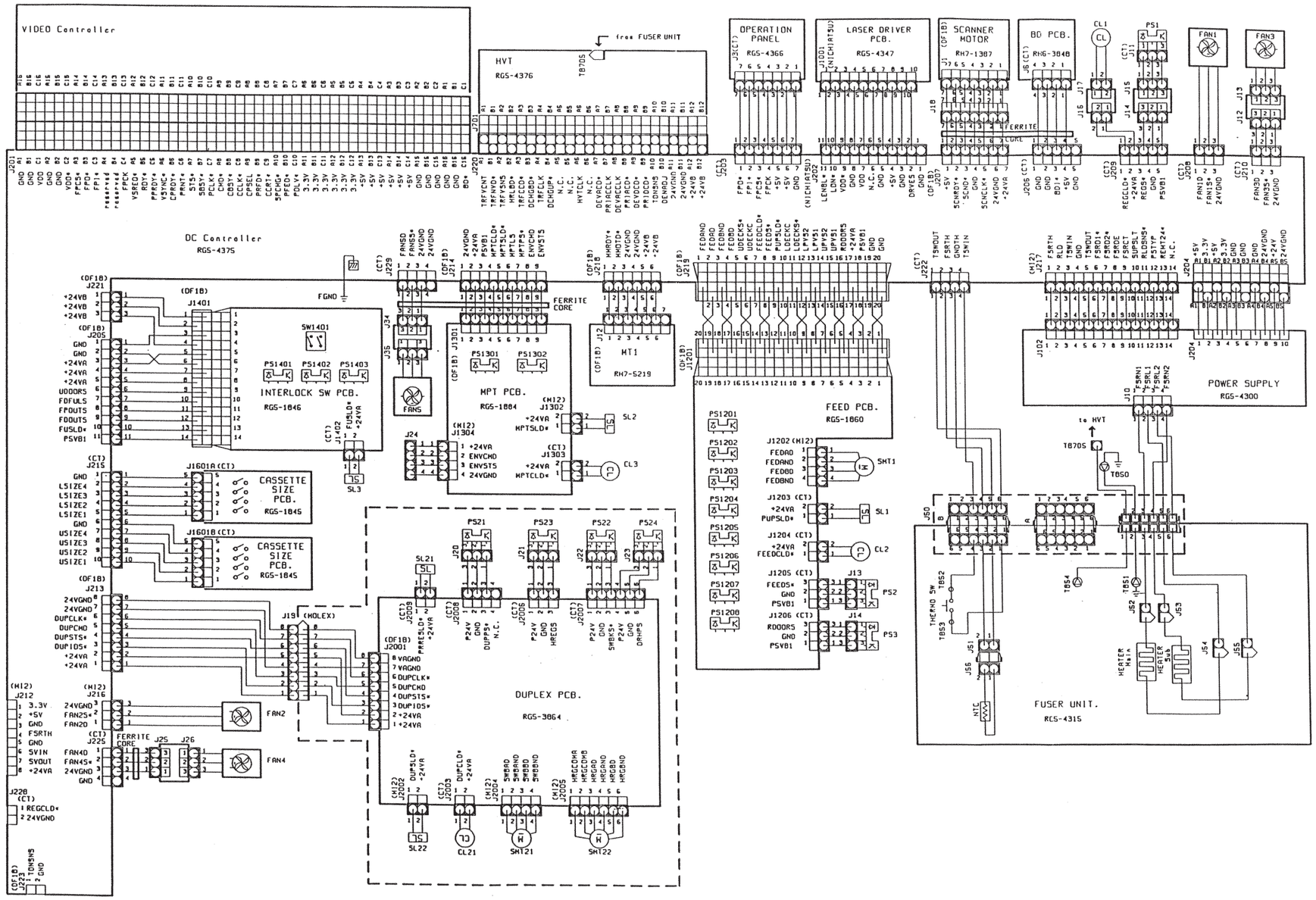

Download Service Manual And Resetter Printer at http://printer1.blogspot.com